140-344
140-344

TRANSCRIPT OF RECORD.

SUPREME COURT OF THE UNITED STATES.

OCTOBER TERM, 1890.

No. 136.

ELON A. MARSH AND MINARD LAFEVER, PLAINTIFFS IN ERROR,

vs.

NICHOLS, SHEPARD & CO.

IN ERROR TO THE CIRCUIT COURT OF CALHOUN COUNTY, STATE OF MICHIGAN.

FILED OCTOBER 4, 1887.

A municipal corporation, given power by statute to buy in property at its own sale for the purpose of perpetuating a lien for taxes or assessments, cannot claim, after the purchase, to have any better right against a taxpayer, or the legislative power of repeal or control, than it had before the sale. The municipality gets no greater right against the taxpayer than it had before the sale, unless it be to recover the added costs and expenses of the several sales and evidences thereof. The municipality parts with no NEW CONSIDERATION on the purchase, whereby it acquires any greater rights.

A public corporation has no vested rights in fines, duties or taxes directed to be paid to it, nor in money consideration due to it for privileges granted by it. The legislature may release them by a law repealing or otherwise.

State v. *Railroad Co.*, 12 Gill & John. (Md.) 390.
Same case affirmed in Sup. Ct. U. S. 3 Howard, 534.
Coles v. *Madison Co.*, Breese, (Ill.) 115.
Holiday v. *People*, 5 Gilm. (Ill.) 216.
Connor v. *Barb.* 1 Mo. 235.
Rankin v. *Beaird*, Breese, (Ill.) 123.

The Essex Public Road Board is undoubtedly a *quasi* public municipal corporation. It has corporate powers, *sub modo*, and for certain specified purposes. Its power to levy these assessments is entirely controlled by statute.

Angel and Ames on Corp., Sec. 23.
2d Kent's Commentaries, 221.
Jansel v. *Ostrander*, 1 Cowen, 670.
North Hemstead v. *Hemstead*, 2 Wend. 109.
Dillon on Mun. Corp., Sec. 10.

CONCLUSION.

The statute in this case was passed by the legislature to remedy oppression. Property along avenues in Essex county, under assessments imposed by the plaintiff in error, had virtually been *confiscated*. The evidence in the record in this case will show that the assessments relieved against exceeded the value of the property they were assessed upon nearly *fourfold*.

E. Frank Fort.

140-344
140-344

TRANSCRIPT OF RECORD.

SUPREME COURT OF THE UNITED STATES.

OCTOBER TERM, 1890.

No. 136.

ELON A. MARSH AND MINARD LAFEVER, PLAINTIFFS IN ERROR,

vs.

NICHOLS, SHEPARD & CO.

IN ERROR TO THE CIRCUIT COURT OF CALHOUN COUNTY, STATE OF MICHIGAN.

FILED OCTOBER 4, 1887.

SUPREME COURT OF THE UNITED STATES.

OCTOBER TERM, 1890.

No. 136.

ELON A. MARSH AND MINARD LAFEVER, PLAINTIFFS IN ERROR,

vs.

NICHOLS, SHEPARD & CO.

IN ERROR TO THE CIRCUIT COURT OF CALHOUN COUNTY, STATE OF MICHIGAN.

INDEX.

	Original.	Print.
Clerk's certificate to record	1	1
Judge's certificate to clerk's signature	2	1
Clerk's certificate to judge's signature	2	1
Docket entries	3	2
Writ of error	5	3
Citation	8	4
Proof of service of citation	9	4
Bond	10	5
Petition for writ of error	13	6
Bill of complaint	17	7
Order for subpœna	25	12
Subpœna	26	12
Sheriff's return	27	13
Appearance for defendants Marsh and Lafever and order for copy of bill	28	13
Answer of Marsh and Lafever	31	14
Replication to answer of Marsh and Lafever	44	22
Appearance for defendant, James Scott, and order for copy of bill	44c	23
Answer of James Scott	45	23
Replication to answer of James Scott	48*b*	25
Supplemental answer of Marsh and Lafever	49	26
Testimony taken in open court	53	28
Testimony of Edwin C. Nichols	54	28

JUDD & DETWEILER, PRINTERS, WASHINGTON, D. C., SEPTEMBER 2, 1890.

	Original.	Print.
Testimony of Eugene M. Converse	155	85
James Scott	175	96
Edwin C. Nichols (recalled)	191	105
James Scott (recalled)	192	106
Edwin C. Nichols (recalled)	195	107
Elon A. Marsh	196	108
Edwin C. Nichols (recalled)	287	160
Elon A. Marsh (recalled)	290	161
Minard Lafever	290	162
Edwin C. Nichols (recalled)	314	175
Minard Lafever (recalled)	316	177
S. D. Whittaker	319	178
Charles F. Burton	322	180
Edwin C. Nichols (recalled)	324	181
Eugene M. Converse (recalled)	326	183
Stipulation as to testimony	327	183
Judge's certificate	328	183
Notice to take testimony of James Scott, &c.	328*a*	184
Letter of C. F. Burton to James Scott, January 6, 1884	328*a*	184
Exhibit 12—Deposition of James Scott	328*b*	185
13—Article from Battle Creek "Moon:" "A chapter of history"	355*a*	200
Notice to take testimony of Horatio N. Land *et al.*, &c.	357*a*	201
Deposition of Horatio N. Land	358	202
Wm. G. Scott	360	204
Exhibit Scott A—Letter, E. A. Marsh to Gaar & Scott, February 8, 1879	362	205
B—Letter, E. A. Marsh to Gaar, Scott & Co., November 29, 1880	363	205
C—Letter, E. A. Marsh to Gaar, Scott & Co., December 28, 1880	363	206
D—Letter, Marsh, Lafever & Co. to Gaar, Scott & Co., May 21, 1881	363	206
E—Letter, Marsh, Lafever & Co. to Gaar, Scott & Co., July 27, 1881	364	206
F—Letter, Marsh, Lafever & Co. to Gaar, Scott & Co., January 20, 1881	364	206
G—Letter, Marsh, Lafever & Co. to Gaar, Scott & Co., March 9, 1884	365	206
H—Letter, Marsh, Lafever & Co. to Gaar, Scott & Co., July 20, 1882	366	207
Notice to take testimony of Lewis W. Hasselman *et al.*	366*d*	209
Deposition of Lewis W. Hasselman	367	210
William E. Otter	371	213
Notice to take testimony of Samuel Bradley *et al.*, &c.	273*b*	215
Deposition of Samuel Bradley	373*c*	215
James B. Ellsworth	389	224
Findings of the court	394	227
Decree	397	229
Certified copy of letters patent No. 236,052, granted Marsh and Lafever December 28, 1880	400	230
Stipulation as to use of copy of patent	405	233
Claim of appeal to supreme court of Michigan	407	233

	Original.	Print.
Notice of appeal, &c.	408	233
Bond on appeal	409	234
Decree of supreme court of Michigan	412	235
Remittitur from supreme court of Michigan	415	236
Complainants' taxed bill of costs, &c.	419	237
Draft of decree, &c.	425	239
Opinion of supreme court of Michigan	429	240
Exhibit No. 1—Letter, E. A. Marsh to E. C. Nichols, July 15, 1879	435	243
2—Letter, E. A. Marsh to E. C. Nichols, July 12, 1879	437	244
3—Letter, E. A. Marsh to E. C. Nichols, Feb'y 6, 1880	439	245
5—Letters patent No. 236,052, granted Marsh and Lafever December 28, 1880	441	245
6—Letters patent No. 308567, granted E. A. Marsh November 25, 1884	443	247
7—Notice of Marsh and Lafever to Nichols, Shepard & Co., February 11, 1881	446	249
4—Letter, E. A. Marsh to E. C. Nichols, April 21, 1880	446	249
8—Form of license, Marsh and Lafever's patent valve gear	448	249
9—Senate bill for relief of Marsh and Lafever	450	251
10—Affidavit of J. W. Miles	453	252
11—Statements of E. M. Converse	454	253
Stipulation as to Exhibit No. 11	457	254
Exhibit 14—Bill of complaint of James Scott *vs.* Marsh and Lafever	458	255
15—Amended bill of complaint of James Scott *vs.* Marsh and Lafever	464	258
16—Bill of complaint of Marsh, Lafever and Scott *vs.* Nichols, Shepard & Co. *et al.*	469	261
Plea of Nichols, Shepard & Co.	478	265
Demurrer of E. C. Nichols *et al.*	483	268
Order of discontinuance	485	269
Clerk's certificate	486	270
Replication to answer of James Scott	487	270
17—File wrapper, contents, and drawing in the matter of letters patent No. 236,052, granted Marsh and Lafever December 28, 1880	488	271
18—Bill of complaint of Marsh, Lafever and Scott *vs.* Nichols, Shepard & Co.	514	285
Answer	520	288
Replication	522*a*	290
Petition to amend answer and notice	523	291
Motion to amend answer and notice	525	292
Affidavit of E. C. Nichols	526	292
Order granting leave to amend answer, &c	528	294
Amendment to answer	529	294
Replication	529*a*	295
Motion to strike Exhibit A from files	530	295
Affidavit of Chas. F. Burton	531	296
Stipulation as to Exhibit A	533	297
Order denying motion to strike out exhibit	535	298
Order suppressing deposition of James Miles	535*a*	299
Order allowing amendment to answer	536	299
Amendment to answer	537	300

	Original.	Print.
Exhibit 18—Replication	537*a*	300
Hearing and submission	537*b*	301
Stipulation relative to Exhibit A	537*c*	301
Decree dismissing bill without costs to either party	543	305
Plaintiff's claim of appeal	544	305
Order allowing plaintiffs' claim of appeal	545	306
Order allowing defendants' claim of appeal	546	306
Clerk's certificate	547	307
19—Bill of complaint of Marsh and Lafever *vs.* Nichols, Shepard & Co.	550	308
21—Letters patent No. 308,567, granted E. A. Marsh November 25, 1884	563	314
22—Diagram	568	317
23—Letters patent 244,807, granted A. J. Hoag July 26, 1881	569	317
26—Report of Committee on Patents on bill for relief of Marsh and Lafever	574	319
27—Record of Patent Office in matter of interference, Marsh *vs.* Hoag	577	322
28—Evidence for Marsh in matter of interference, Marsh *vs.* Hoag	631	348
Testimony of Elon A. Marsh	632	349
Martin E. Brown	646	358
George W. Marsh	649	360
George A. Young	653	362
Minard Lafever	656	364
Notice to take testimony	665	370
Notary's certificate	666	371
Exhibit—Evidence for Hoag, assignor, &c., in interference matter	668	371
Testimony of Andrew J. Hoag	669	372
Samuel Bradley	686	383
Charles King Nelson	692	387
Edwin C. Nichols	697	391
Andrew Thomson	731	413
John A. Drew	733	414
Notary's certificate, &c.	735	415
Exhibit—Evidence for Marsh in rebuttal in interference matter	760	431
Testimony of Elon A. Marsh	762	431
John M. Henry	781	447
Eli Flagg	783	449
Martin E. Brown	785	451
Edward S. Newman	788	453
Minard Lafever	791	455
Michael Rainbow	800	463
Notary's certificate	805	468
Exhibit—Evidence for Hoag, assignor &c., in surrebuttal in interference matter	806	468
Testimony of David Shepard	807	469
Wallace W. Stilson	829	485
Franklin T. Roberts	846	497
Andrew Thomson	858	506
James W. Wood	872	516
Edgar Ethridge	872	516

	Original.	Print.
Testimony of George F. Barrows	881	522
Albert Griswold	917	547
James W. Wood	930	556
Wm. D. Rogers	933	558
Chas. H. Hicks	947	568
Andrew Thomson	949	570
Hiram Pittee	963	579
Alson Evans	964	581
George A. Halbert	966	582
Notary's certificate, &c.	967	583
Notices to take testimony, &c.	972	586
Affidavit of Constantius G. Case	976	588
Edwin C. Nichols	977	589
Letter C. G. Case to Nichols, Shepard & Co., September 8, 1880	978	589

1 STATE OF MICHIGAN, } ss:
County of Calhoun, }

I, Louis C. Miller, clerk of the circuit court and register in chancery for the county of Calhoun, State of Michigan, do hereby certify to the Supreme Court of the United States that the annexed instrument is a true copy and transcript of the record, pleadings, papers, and proceedings now in the circuit court for Calhoun county, in chancery, in that certain cause wherein Nichols, Shepard & Company is complainant and Elon A. Marsh, Minard Lefever, and James Scott are the defendants, said record being the record and proceedings, opinion, and order on the appeal by said Marsh and Lefever of said cause in the supreme court of the State of Michigan, returned by the order of said supreme court to said circuit court, and also of the subsequent proceedings and decree in said circuit court after the affirmance of the decree on said appeal, as the same appears of record in my office, and that I have compared said copy with the said original record now on file in my office and subsequent proceedings and decree and find it to be a true copy thereof and of the whole thereof, and that the writ of error to the Supreme Court of the United States, the allowance of writ of error to the Supreme Court of the United States, the bond on writ of error to the Supreme Court of the United States, and the copy of the citation and proof of service endorsed thereon are the originals filed in said cause.

Seal of the Circuit Court of Calhoun Co., Michigan.

In testimony whereof I have hereunto set my hand and affixed the seal of said court, at Marshall, Michigan, this 26th day of Sept., A. D. 1887.

LOUIS C. MILLER,
Clerk of the Circuit Court and Register in Chancery.

2 STATE OF MICHIGAN, } ss:
County of Calhoun, }

I, Frank A. Hooker, circuit judge of the fifth judicial circuit of the said State and presiding judge of the circuit court for the county of Calhoun, in said State, do hereby certify that Louis C. Miller, whose signature is affixed to the paper hereto annexed, is clerk of the circuit court in said county of Calhoun and has the keeping of the files, records, and proceedings of the said court in said county and is by law the proper person to certify copies of all records and proceedings of said court in said county, and that the foregoing attestation of Louis C. Miller is in due form.

Dated Sept. 26th, A. D. 1887.

FRANK A. HOOKER,
Circuit Judge and Presiding Judge of the Circuit Court for the County of Calhoun, in the State of Michigan.

STATE OF MICHIGAN, } ss:
County of Calhoun, }

I, Louis C. Miller, clerk of the circuit court for the county of Calhoun, State of Michigan, do hereby certify that Frank A. Hooker, whose signature is affixed to the certificate hereto annexed, is judge of the fifth judicial circuit of said State and presiding judge of the circuit court for the county of Calhoun, State of Michigan.

Seal of the Circuit Court of Calhoun Co., Michigan.

Witness my hand and seal of the said court and county, at the city of Marshall, this 26th day of Sept., A. D. 1887.

LOUIS C. MILLER,
Clerk of the Circuit Court for Calhoun County, State of Michigan.

3 Parties.	Complainant's sol'r.	Defendants' solicitor-.
Nichols, Shepard and Company, complainant, *vs.* Elon A. Marsh, Minard La Fever, & James Scott, defendants.	Charles F. Burton --	Brown & Thomas, Battle Creek, for Scott; R. A. Parker, Detroit, for Marsh & La Fever.

Special orders.	Common orders.	Date.	Proceedings.
		Apr. 16, 1884	Filed bill of complaint.
	8,122	" "	Entered order for subpœna.
		" "	Issued subpœna.
		" 21, "	Filed su-pœna. Personally served.
		" 29, "	Filed amendment to bill of complaint.
	8,442	May 15, "	Entered appearance of def't Scott by Brown and Thomas.
		" "	Filed separate ans. of def't Scott.
	7,219	" 16, "	Entered & filed appearance of def'ts Marsh & La Fever.
		June 7, "	Filed replication to ans. of def't Scott.
		" 16, "	Filed ans. of def'ts Marsh & La Fever.
		July 2, "	" replication to ans. of def'ts Marsh & La Fever.
		Aug. 9, "	" deposition of James Scott.
		May 19, 1885	" depositions of Lewis H. Hasselman & Wm. E. Otter.
		" 21, "	" depositions of Horation N. Land & William G. Scott.
		" 27, "	" stipulation to put on calendar & time of hearing.
		June 12, "	" depositions of Samuel Bradley & James B. Ellsworth.
		" 22, "	" supplemental ans. of Marsh & La Fever.
		July 25, "	" stenographer's official transcript.
		Sept. 14, "	" findings of court.
		" "	Notified all the sol'rs in this case by mail this day.
		" 19, "	Filed draft of proposed decree & notice of hearing & settlement & proof of service.

	Special orders.	Common orders.	Date.	Proceedings.
4	5,533	----------	Nov. 3, 1885	Filed decree & entered the same.
			" "	Notified all the sol'rs in the case by mail this day.
			Dec. 30, "	Filed stipulation & settlement of case.
			Feb'y 3, 1886	Filed stipulation & copy of letters patent.
			" 4, "	" claim of appeal & bond, with notice of appeal.
			Mar. 3, "	Sent record of case to supreme court by Am. Ex.
			May 5, "	Sent exhibits in case to supreme court by Am. Ex.
			June 28, "	Rec'd record of case from supreme court by Am. Ex.
			" "	Filed order of supreme court affirming decree of circuit court.
			" "	Notified attorneys of receipt of same.
			Aug. 3, "	Filed order from supreme court amending decree.
			" "	Notified solicitors of receipt of same.
			Sept. 2, "	Filed taxed bill of costs, $167.74.
			" 14, "	" amendment to decree & proof of notice of settlement of same.
	5,531	----------	" "	Entered amendment to decree.
			Oct. 25, 1886	Filed allowance of writ of error to Supreme Court of U. S.
			" "	Filed bond on writ of error to Supreme Court of U. S.
			" "	Filed citation & proof of service.
			" "	" writ of error to Supreme Court of U. S.
			Feb'y 16, 1887	" opinion of supreme court of Michigan.
			Aug. 24, "	" stipulation to withdraw Exhibit No. 11.
			" 30, "	" stipulation as to record to be sent to Supreme Court.

5 UNITED STATES OF AMERICA, *ss:*

Seal of the Supreme Court of the United States.

The President of the United States of America to the honorable the judge of the circuit court of the county of Calhoun, State of Michigan, being possessed of the record and proceedings upon a remittitur from the supreme court of the State of Michigan, Greeting:

Because in the record and proceedings, as also in the rendition of the judgment of a plea which is in the said circuit court, before you, on remittitur from said supreme court, that being the highest court of law or equity of the said State in which a decision could be had in the said suit between Nichols, Shepard & Co., complainant, and Elon A. Marsh and Minard Lafever, defendants, wherein was drawn in question the validity of treaty or a statute of or an authority exercised under the United States and the decision was against their validity, or wherein was drawn in question the validity of a statute of or an authority exercised under said State on the ground of their being repugnant to the Constitution, treaties, or laws of the United States and the decision was in favor of such their validity, or

wherein was drawn in question the construction of a clause of the
6 Constitution or of a treaty or statute of or commission held under the United States and the decision was against the title, right, privilege, or exemption specially set up or claimed under such clause of the said Constitution, treaty, statute, or commission, a manifest error hath happened, to the great damage of the said defendants, as by their complaint appears, we, being willing that error, if any hath been, should be duly corrected and full and speedy justice done to the parties aforesaid in this behalf, do command you, if judgment be therein given, that then, under your seal, distinctly and openly, you send the record and proceedings aforesaid, with all things concerning the same, to the Supreme Court of the United States, together with this writ, so that you have the same at Washington on the second Monday of October next, in the said Supreme Court to be then and there held, that, the record and proceedings aforesaid being inspected, the said Supreme Court may cause further to be done therein to correct that error what of right and according to the laws and customs of the United States should be done.

Witness the Honorable Morrison R. Waite, Chief Justice of the said Supreme Court, the thirteenth day of October, in the year of our Lord one thousand eight hundred and eighty-six.

JAMES H. McKENNEY,
Clerk of the Supreme Court of the United States.

Allowed by—
STANLEY MATTHEWS,
Associate Justice.

7 [Endorsed:] 162 to 360. 4, 5. Elon A. Marsh & Minard Lafever, pl'ffs in error, *vs.* Nichols, Shepard & Co., def't in error. Writ of error to Supreme Court of the United States. Filed Oct. 25th, 1886. Leonidas H. Brockway, register in chancery.

8 The United States of America to Nichols, Shepard & Co., a corporation, Greeting:

You are hereby cited and admonished to be and appear at a Supreme Court of the United States, to be holden at Washington on the second Monday of October next, pursuant to a writ of error filed in the clerk's office of the circuit court of the county of Calhoun, State of Michigan, wherein Elon A. Marsh and Minard Lafever are plaintiffs in error and you are defendant in error, to show cause, if any there be, why the decree rendered against the said plaintiff in error, as in the said writ of error mentioned, should not be corrected and why speedy justice should not be done to the parties in that behalf.

Witness the Honorable Stanley Matthews, associate justice of the Supreme Court of the United States, this 13th day of October, in the year of our Lord one thousand eight hundred and eighty-six.

STANLEY MATTHEWS,
Associate Justice.

9 [Endorsed:] 162 to 360. 3, 5. Supreme Court of the United States. Elon A. Marsh & Minard Lafever, pl'ffs in error, *vs.* Nichols, Shepard & Co., def't in error. Citation & proof of service. Filed Oct. 25th, 1886. Leonidas H. Brockway, register in chancery.

The within citation was served on me this 23d day of October, 1886.

CHARLES F. BURTON,
Sol'r & of Counsel for Nichols, Shepard & Co.

10 Supreme Court of the United States.

NICHOLS, SHEPARD & CO., Complainant,
vs.
ELON A. MARSH & MINARD LAFEVER, Defendants.

Know all men by these presents that we, Elon A. Marsh, Minard Lafever, principals and sureties, of Battle creek, Michigan, are held and firmly bound unto Nichols, Shepard & Co., of the same place, in the sum of five hundred ($500) dollars, their assigns or representatives; to which payment, well and truly to be made, we bind ourselves and each of us, jointly and severally, and our and each of our heirs, executors, and administrators, firmly by these presents.

Sealed with our seals. Dated this — day of ——, 1886.

Whereas the above-named Minard Lafever and Elon A. Marsh hath prosecuted a writ of error in the Supreme Court of the United States to reverse the judgment rendered in the above-entitled action by the supreme court of the State of Michigan:

Now, therefore, the condition of the obligation is such that if the above-named Elon A. Marsh and Minard Lafever shall prosecute their said writ of error to effect and answer all costs and dam-

11 ages if they shall fail to make good their plea, then this obligation shall be void; otherwise to remain in full force and virtue.

ELON A. MARSH. [SEAL.]
MINARD LAFEVER. [SEAL.]
GEORGE W. MARSH. [SEAL.]
ALBANUS M. PHILLIPS. [SEAL.]

Sealed and delivered in the presence of—
MYRON H. JOY.

UNITED STATES OF AMERICA, } *ss:*
Eastern District of Mich., }

George W. Marsh & Albanus M. Phillips, being duly sworn, depose and say and each for himself says that he is worth the sum of $500 over and above all his just debts and liabilities.

Sworn to before me this 14th day of September, 1886.

MYRON H. JOY,
United States Commissioner, Eastern Dist. of Michigan.

I approve of the above bond and a sufficiency of the sureties thereto.

Dated Sept. 14th, 1886.

MYRON H. JOY,
United States Commissioner, Eastern Dist. of Michigan.

Approved.
STANLEY MATTHEWS,
Associate Justice.

Oct. 3, 1886.

12 [Endorsed:] 162 to 360. 2, 5. Bond. Minard Lafever & others to Nichols, Shepard & Co. On writ of error to Supreme Court of the United States. Filed Oct. 25th, 1886. Leonidas H. Brockway, register in chancery.

13 To the Honorable Stanley Matthews, a justice of the Supreme Court of the United States:

And now come Elon A. Marsh and Minard Lafever, by R. A. Parker, their solicitor and attorney, and complain that in the record and proceedings and also in the rendition of a decree in a suit between Nichols, Shephard & Co., a corporation, complainant, and said Elon A. Marsh and Minard Lafever, defendants, in the supreme court of the State of Michigan, being the highest court of law and equity of said State in which a decision could be rendered in said suit, and in which a final decree was rendered against them on the 21st day of July, 1886, in said suit, wherein it appears there was drawn into question an authority exercised by defendants under the Constitution and laws of the United States, and also it appears that such authority so exercised by said defendants was denied—

In this:

(1.) That it appears therein that the exclusive jurisdiction of the Supreme Court of the United States, on the appeal by these defendants, over the same question and the same parties was drawn in question and was denied.

(2.) That full faith and credit, at the request of these defendants, was not given to the proceedings, record, and appeal appearing in the circuit court of the U. S. for the eastern district of Michigan concerning the same issues and between the same parties.

(3.) That the right and authority under the Constitution and laws of the United States of thedefendants to prosecute their said
14 appeal from the said circuit court of the U. S. was drawn in question and denied.

(4.) That the right and authority under the Constitution and laws of the U. S. authorizing the issue of letters patent to inventors, and especially the right and authority exercised by said defendants under letters patent No. 236,052, issued in pursuance of said laws, was drawn in question and denied.

All of which appears in the records and proceedings of said suit, and that manifest error hath happened to the said Elon A. Marsh and Minard Lafever.

Wherefore they pray for the allowance of a writ of error and such other process as may cause the same to be corrected by the Supreme Court of the United States; and it appearing that the said supreme court of the State of Michigan having remanded the cause and transmitted the said record to the circuit court for the county of Calhourn without returning a copy thereof, they further pray that such writ of error may be directed to the circuit judge of said circuit court for the county of Calhoun.

R. A. PARKER,
Solicitor and Attorney.

Allowed.
STANLEY MATTHEWS.
Associate Justice of the Supreme Court of the United States.
Oct. 13, 1886.

15 [Endorsed:] 1, 5. 162 to 360. Elon A. Marsh & Minard Lafever, pl'ffs in error, *vs.* Nichols, Shepard & Co., def't in error. Allowance of writ of error to Supreme Court of the United States. Filed Oct. 25th, 1886. Leonidas H. Brockway, register in chancery.

16 STATE OF MICHIGAN:

Supreme Court. April Term, 1886.

NICHOLS, SHEPARD & Co., Complainants and Appellees,
vs.
ELON A. MARSH, MINARD LA FEVER, and JAMES SCOTT, Defendants and Appellants.

Record.

R. A. Parker, sol'r for def'ts; C. F. Burton, sol'r for compl'ts.

17 STATE OF MICHIGAN:

Supreme Court.

NICHOLS, SHEPARD & Co., Compl't,
vs.
ELON A. MARSH, MINARD LA FEVER, and JAMES SCOTT, Def't.s

Record.

Bill of complaint.

In the Circuit Court for the County of Calhoun. In Chancery.

Nichols, Shepard & Co., a corporation duly organized under the laws of the State of Michigan, having its principal office and place of business at Battle Creek, in the county of Calhoun, brings this its
18 bill of complaint against Elon A. Marsh, Minard La Fever, and James Scott, all residents of Battle Creek, in said county of Calhoun, and alleges as follows:

1. That Elon A. Marsh has long been known to the stockholders and officers of said corporation, and that he has several times for more or less extensive periods been employed by said corporation in and about its works at Battle Creek, where complainant is engaged in large manufacturing enterprises; that, among other things, complainants are extensively engaged in the manufacture of steam-engines designed for farmers' use and designed to be used as traction engines—that is, engines which are mounted on carriages and capable of self-propulsion; that in order to successfully accomplish this result of self-propulsion the engine must be fitted with some device by which the power of the steam can be utilized to move the carrying wheels either forward or backward or to change from a forward to a backward motion at the will of the operator.

That many devices for effecting this result have been invented, but that defendant, Elon A. Marsh, applied to E. C. Nichols, treasurer of complainant corporation, at various times during the spring and early summer of 1880 and exhibited to him and explained a device which he, said Marsh, claimed to have invented for the purpose of accomplishing the said result and which he, said Marsh, claimed would excel other devices for the same purpose.

2. That said Marsh claimed that he had applied to the proper department of the United States to procure a patent on said invention, and that without a doubt a patent would be granted to him.

19 3. Said Marsh was desirous of introducing his device and of inducing manufacturers of steam-engines to employ it upon engines built by them; that he had placed said device on a small stationary upright engine then not in regular use and had found that it would accomplish the desired result on that engine, but it had not been used on any large or traction engine, and whether it would be successful or not in continuous use at hard work was not yet fully determined.

4. That said Marsh, in August, 1880, proposed to E. C. Nichols, treasurer as aforesaid, to manufacture one of said devices of a size appropriate to be mounted on engines that complainant was then building and give it a thorough test.

That such action on the part of said complainant necessarily involved a considerable outlay of labor and money, insomuch as it necessitated the removal of the device then in use, the stripping of a portion of the boiler, and mounting thereon the device of defendant, in addition to the making of patterns and the fabrication of the device itself.

5. That said defendant proposed, in consideration for the outlay that would be involved and in consideration of the benefits that would accrue to him if said device should prove successful in actual use, to permit complainant thereafter to use said device on steam-engines manufactured by it or under its direction without any claim against it, either because he was the first inventor or because of any patent that should be granted him upon his application therefor.

That upon such terms the said complainant, through E. C. Nichols acting for it, finally agreed, in August, 1880, to manufacture

20 and mount one of said devices upon an engine then in course of preparation for exhibition at State fairs about to be held.

6. That thereafter said corporation allowed said Elon A. Marsh to superintend the mounting of said device upon said engine, and, after it was so mounted, employed him, at his request, to attend with said engine and exhibit the same, with the said device so mounted thereon, at the State fair of Missouri, held at St. Louis, and the State fair of Illinois, held at Springfield during the months of September and October, 1880, as a sample of the engines complainant proposed thereafter to manufacture and sell and to enable said Marsh to exhibit the said device and promote the sale thereof to other manufacturers.

7. That said Marsh did so attend at said places and exhibit said engine as an engine manufactured by complainant at its works in Battle Creek and as a sample of the engines complainant proposed thereafter to manufacture and sell.

That in mounting said device on said engine and exhibiting the said engine the said Marsh was put to no expense, but, on the contrary, was employed and paid a good salary by complainant during all the time he was so engaged in exhibiting said engine.

8. That complainant in all things performed the agreement entered into by it with said Marsh, and should not be molested in any way in the use of said device, according to the agreement and undertaking of said Elon A. Marsh, but should be allowed to manufacture, mount, use, and sell on any engine manufactured and sold by it the said device, and this complainant hoped that it would be unmolested in the use and employment of said device, in accordance with said agreement; but the said Elon A. Marsh claims to have prosecuted the application so pending as aforesaid to a successful issue, and to have procured a patent to be issued to him-

21 self and to defendant, Minard La Fever, assignee of one-half thereof, on the 28th day of December, 1880, and claims that thereafter the said Marsh and La Fever jointly assigned an undivided ⅓rd of the rights secured under the patent claimed to have been so issued to said defendant, James Scott, and the said defendants claim that the said agreement so as aforesaid entered into between this corporation and said Marsh did not secure to complainant the rights to use said device on such engines as it might manufacture and expose for sale and sell in the prosecution of its business, either because said agreement was not in writing or for some other reason, and thereafter the said three defendants applied to the circuit court of the United States for the eastern district of Michigan, sitting in equity, for an injunction to restrain this corporation, complainant, from directly or indirectly making, using, vending, working, or putting into practice, operation, or use, or in anywise counterfeiting or imitating the said device claimed to have been invented by said Elon A. Marsh and to have been secured to him and said La Fever by letters patent dated December 28th, 1880.

9. That this complainant answered the said bill and denied the validity of said patent according to the ordinary rules and prac-

tices of said court; that considerable testimony was taken, showing the state of the art at the time said Marsh claimed to have invented said device, all of which appears in the record of said cause; that it further appeared in the testimony in said cause that the paper which said complainants claimed as a patent was not a valid patent and was not signed as a patent at the time it purported to have been issued and bore no signature of the Secretary of
22 the Interior at the time said suit was begun; that it had been signed by A. Bell, who in making such signature designated himself as acting Secretary of the Interior, and that such signature had been placed on this paper on the 23rd day of February, 1882, and long after said suit was commenced.

10. That the said circuit court of the United States for the eastern district of Michigan, sitting in equity, having heard the cause and the arguments of counsel, on the 16th day of April, 1883, entered a final decree in said cause, dismissing the said bill of complaint and adjudging that the said complainants therein had no cause of action against this complainant, as claimed in the said bill.

That complainant is informed and believes and charges it to be true that the said defendants have applied to the Congress of the United States to grant them a patent for said device, and that bills for that purpose have been introduced into both the Senate and House of Representatives, but that no such bills have become laws, and said defendants have no valid patent and no right to prevent any person whatsoever from manufacturing said device.

Nevertheless, the said defendants represent to the public that they have secured letters patent upon said device and threaten to bring suits against this complainant and those persons purchasing from it, and they further affirm that this complainant has no right under and by virtue of the said agreement between it and said Marsh to manufacture, use, or vend said device, and they thereby injure and harass complainants, and their said action in so claiming to hold such patent as aforesaid and in claiming that complainant has no right under and by said agreement prevents
23 persons desiring engines of the class manufactured by complainant from purchasing the same of complainant; that defendants' claim to the exclusive right to said device is wholly without foundation, and, even should the pending application for a patent be granted (now pending in the shape of bills before the Houses of Congress), complainant would still be entitled to manufacture and vend the same, and would be entitled to the protection and aid of this court to compel said defendants to carry out and perform the said contract and refrain from interfering with the acts of complainant done in pursuance of said contract, and that until such patents shall have been granted complainants are entitled to the protection of this court to prevent and restrain said defendants from falsely and maliciously representing that complainants are violating rights secured to them by patent right and from falsely and maliciously representing that complainants did not in good faith enter into a contract with said Marsh by which it became entitled to employ said device on all engines thereafter manufactured by it, even though said Marsh should

procure a patent and become entitled to protection in the exclusive use of said device as against all other persons.

That complainants therefore seek the aid of this court and pray as follows:

1. That the defendants may true answer make to this bill of complaint, but not on oath, answer under oath being hereby expressly waived.

2. That defendants may be ordered to refrain and desist from asserting that complainants have not the full and complete right to make, use, vend, or put into practice or operation and use on any engine made, sold, used, or operated by it the said device in
24 the same form or style or substantially the same form or style as that exhibited on the said engine made in 1880, at the time of its said agreement with said Elon A. Marsh.

3. That said defendants may be ordered to desist and refrain from publishing or asserting that it has any right to the exclusion of this complainant in and to the said device.

4. That defendants may be ordered and decreed to specifically carry out the said original contract made between complainant and Elon A. Marsh by which complainant was to be permitted, if defendant Marsh should obtain a patent on said device, to use, vend, and employ said device on any or all engines made at defendants' shop without molestation or interference on the part of said Marsh or any one who may have become interested with him in said device or the patent thereafter to be procured therefor.

5. That the writ of injunction of this court may be issued to said Elon A. Marsh, Minard La Fever, and James Scott, directing them to abstain from interfering with complainant's use of said device at the present time or in the future if a patent should hereafter be granted to them.

6. That the usual writ of subpœna may issue to the said defendants, Elon A. Marsh, Minard La Fever, and James Scott.

7. That the complainants may have such other and different relief or further relief as may be in accordance with their equitable rights.

NICHOLS, SHEPARD & CO.,
By C. F. BURTON, *Their Attorney.*

CHARLES F. BURTON,
Solicitor for Complainant.
—— ——, *Of Counsel.*

[Endorsed:] 162. Circuit court for the county of Calhoun. In chancery. Nichols, Shepard & Co. *vs.* Elon A. Marsh *et al.* Bill of complaint. Filed April 16, 1884. Wm. F. Neal, register in chancery. Charles F. Burton, solicitor for complainant.

25 STATE OF MICHIGAN:

The Circuit Court for the County of Calhoun. In Chancery.

NICHOLS, SHEPARD AND CO., Complainant,
vs.
ELON A. MARSH, MINARD LAFEVER, and JAMES SCOTT, Defendants.

Dated APRIL 16TH, 1884.

On reading and filing bill of complaint in this cause, on motion of Charles F. Burton, solicitor for the complainant, it is ordered that a subpœna be issued out of and under the seal of said court, directed to the said defendants, agreeable to the said bill.

WILLIAM F. NEALE,
Register in Chancery.

CHARLES F. BURTON,
Solicitor for Complainant.

Entered in Chancery Common Orders No. 8, page 122.

26 *Chancery Subpœna.*

STATE OF MICHIGAN, *To wit:*

The Circuit Court for the County of Calhoun. In Chancery.

[SEAL.] In the name of the people of the State of Michigan, to Elon A. Marsh, Minard Lefever, and James Scott, Greeting:

(Subpœna.)

You are hereby notified that a bill of complaint has been filed against you in the circuit court for the county of Calhoun, in chancery, by Nichols, Shepard and Co., as complainant, and that if you desire to defend the same you are required to have your appearance entered with the register of said court, at his office, in the city of Marshall, in person or by solicitor, within twenty days after the 28th day of April, in the year 1884, which is the return day of this writ.

Hereof fail not under the penalty of having said bill taken as confessed against you.

Witness the Honorable Frank A. Hooker, circuit judge, at Marshall, this 16th day of April, in the year of our Lord one thousand eight hundred and eighty-four.

WILLIAM F. NEALE, *Register.*

CHARLES F. BURTON,
Solicitor for Complainants.

Underwriting.—A personal decree is sought against the defendants, Elon A. Marsh, Minard Lefever, and James Scott, and the bill is filed to reach interests in property and not to obtain any further relief against the remainder of the defendants.

CHARLES F. BURTON,
Solicitor for Complainants.

27 [Endorsed:] No. 162. State of Michigan. The circuit court for the county of Calhoun. In chancery. Nichols, Shepard and Co., complainant, *vs.* Elon Marsh *et al.*, defendants. Subpœna. Filed April 21st, A. D. 1884. William F. Neale, register. Charles F. Burton, complainant's solicitor. Please file. N., S. & Co.

STATE OF MICHIGAN, } *ss:*
Calhoun County, }

I hereby certify and return that on the 18th day of April, A. D. 1884, I served the within subpœna personally on Elon A. Marsh, and on the 19th day of April, 1884, on Minard Le Fever and James Scott, by delivering to each of said defendants a true copy of the within subpœna, inscribed copy, and subscribed Charles F. Burton, complainant's solicitor, and at the same time I showed each of said defendants the original subpœna, with the seal of the court impressed thereon, at the city of Battle Creek, in said county of Calhoun.

Dated April 19th, 1884.

LOYAL C. KELLOGG, *Sheriff,*
By GEORGE C. ROGERS,
Deputy Sheriff.

My fees, $3.30.

28 *Appearance of Defendants and Order for Copy of Bill.*

STATE OF MICHIGAN, *ss:*

The Circuit Court for the County of Calhoun. In Chancery.

NICHOLS, SHEPARD AND CO., a Corporation, Complainant,
vs.
ELON A. MARSH, MINARD LA FEVER, & JAMES SCOTT, Defendants.

Dated MAY 15TH, A. D. 1884.

In this cause, on motion of R. A. Parker, Detroit, Mich., solicitor for the defendants, Elon A. Marsh and Minard Lafever, it is ordered that the appearance of the said defendants be, and the same is hereby, entered, and on like motion it is further ordered that the complainant or its solicitor deliver a copy of the bill of complaint in this cause to the said solicitor for said defendants within fifteen days after service of notice of this order, and that in default thereof that said bill of complaint be dismissed with costs as to said defendants.

R. A. PARKER,
Solicitor for Defendants, Elon A. Marsh & Minard La Fever.

CHARLES F. BURTON,
Solicitor for Complainants.

29 [Endorsed:] No. 162. The circuit court for the county of Calhoun. In chancery. Nichols, Shepard and Co., complainant, *vs.* Elon A. Marsh *et al.*, def'ts. Appearance for def't & order

for copy of bill. Filed May 16th, 1889. William F. Neale, register in chancery. —— ——, sol. for compl't. R. A. Parker, sol'r for def't-, Marsh & Lafever.

30 STATE OF MICHIGAN:

The Circuit Court for the County of Calhoun. In Chancery.

NICHOLS, SHEPARD AND CO., Complainant,
vs.
ELON A. MARSH, MINARD LAFEVER, and JAMES SCOTT, Defendants.

Dated MAY 15TH, 1889.

In this cause, on motion of R. A. Parker, Detroit, Mich., solicitor for the defendants, Elon A. Marsh and Minard Lafever, it is ordered that the appearance of the said defendants be, and the same is hereby, entered; and, on like motion, it is further ordered that the complainant or its solicitors deliver a copy of the bill of complaint in this cause to the said solicitor for the said defendants within fifteen days after service of notice of this order, and that in default thereof that said bill of complaint be dismissed with costs as to said defendants.

R. A. PARKER,
Solicitor for Defendants, Elon A. Marsh and Minard Lafever.

CHAS. F. BURTON,
Solicitor for Complainant.

Entered in Chancery Com. Orders No. 7, page 219.

31 *Answer of Def'ts Marsh and Lafever.*

In the Circuit Court for the County of Calhoun. In Chancery.

NICHOLS, SHEPARD & CO., Compl't,
vs.
ELON A. MARSH, MINARD LAFEVER, and JAMES SCOTT, Def'ts.

The joint and several answers of Elon A. Marsh and Minard Lafever, of the above-named defendants, to the bill of complaint of Nichols, Shepard & Co., complainant.

The defendants jointly and severally, now and at all times hereafter saving and reserving to themselves all manner of benefit and advantage of exception to the many errors and insufficiencies in complainant's bill of complaint contained, for answer thereunto or unto so much or such parts thereof as these defendants are advised is material for them to make answer unto, they jointly and severally answer and say:

I.

That they jointly and severally have no knowledge that the said

complainant is a corporation duly organized under and doing
32 business by virtue of the laws of the State of Michigan, except as informed by others and by the bill of complaint, and they do not admit the same, but require strict proof thereof.

II.

They jointly and severally admit that said Marsh was known to the managers of the business purporting to be done under the name of Nichols, Shepard & Co., and that they have been and are engaged in making traction engines which are reversible; that said Marsh heretofore invented a device for reversing steam-engines and exhibited it to one E. C. Nichols, claiming that it was superior to all other devices for that purpose on certain classes of engines; that he applied for and expected to receive a patent thereon, and that he was desirous of introducing his said device into use, and admit that said Marsh applied to said E. C. Nichols to be allowed to place one of the reversing gears upon an engine and test the same, but deny that the same would or did involve any considerable expense for labor or otherwise to complainant.

III.

They jointly and severally deny any and all of the allegations of the fifth paragraph of complainant's bill.

IV.

They jointly and severally deny the allegations of the 6th paragraph of complainant's said bill.

V.

They admit that said Marsh attended said St. Louis fair with an engine manufactured by Nichols, Shepard & Co., but not in
33 connection with or as representing that said engine represented the reverse gear said Nichols, Shepard & Co. were to build and use thereafter. They deny that said Marsh was put to no expense and was paid a good salary, as alleged in the seventh paragraph of said bill.

VI.

They deny that complainant ever performed any such alleged agreement with said Marsh, or that any such agreement ever existed as alleged to be performed, or that said complainant has any right by virtue of any agreement whatever. They admit that they claim that said application for a patent was prosecuted to a successful issue, and that letters patent of the United States issued to the said Marsh as inventor and to said La Fever as assignee of an undivided one-half interest therein, and were dated the 28th day of December, 1880, and numbered 236,052. They also admit that an undivided one-third interest therein was subsequently assigned by these defendants to James Scott. They also admit that they claim that any agreement made between said defendant Marsh and said E. C. Nichols, or any pretended agreement, has no force or effect to give

or grant any right or license to said Nichols, Shepard & Co. to make, use, and vend to others the device in question as against these defendants or either of them, and especially as against said defendant La Fever.

VII.

They jointly and severally deny all of the allegations of the 9th and 10th paragraphs of the complainant's bill as alleged therein, except as hereinafter stated and except this, that they admit
34 that they are representing to the public that they have secured letters patent upon said device, and that they affirm that complainants have no rights under or by virtue of any agreement or pretended agreement between it and said Marsh or any other person to make, use, or vend to others to be used said device. They jointly and severally deny that defendants are injuring or harassing or that they have injured or harassed complainants in their business, or that they or their claim prevent or has prevented persons from purchasing engines from complainants. They admit that they, the defendants, claim the exclusive rights to said device, and deny that said claim is without foundation or that complainants are or would be entitled to make, use, or vend the same, or that they are entitled to the protection of this court under or by virtue of any contract whatever.

They jointly and severally aver that no contract of license, either by said Marsh or any other person, has ever been made with the said complainant whereby any rights whatever in said invention were vested in them as against said defendant.

VIII.

These defendants, for further defense, jointly and severally aver that said defendant Marsh, having theretofore invented a certain improved form of reverse gear for a steam-engine, which is more fully described and claimed in the letters patent of the United States issued to said Marsh and said La Fever as assignee, dated and numbered as heretofore described, and being to this court now here shown, and being then and there desirous of applying the
35 same to traction engines, had several conversations with one E. C. Nichols to place one of his devices on an engine for trial preliminary to some arrangement, to be afterwards agreed upon, for a license upon terms if the then pending application resulted in a United States patent thereon and if the said device should work satisfactorily; that said Nichols then professed his disbelief in the utility of said device, and, although permitting a trial, positively and repeatedly refused to make any agreement or arrangement of any kind for its continued use, and afterwards claimed that if it was good they would use it, patent or no patent, or regardless of the rights procured by the patent; that said Marsh did make overture to said Nichols for such continued use and requested him to induce complainant to use the device on some specified terms as a license fee, to be agreed upon, but said Nichols positively refused to do so and positively refused to make any proposition; that theretofore

said Marsh did, on or about the 8th day of September, 1880, and while the application for said patent was then pending, apply said device to an engine at said complainant's yards, but that nearly all of the work involving in said application was done by said Marsh; that he was not in the employ or pay of said complainants or of any one in their behalf; that afterwards the engine to which said device was applied was sent to the fair at St. Louis with other machinery and was accompanied by a gang of men; that said Marsh went with them and, being a machinist, assisted generally and had part of his expenses paid only for his general labor, which replaced that of another man, but was not paid wages, and was not in the
36 employ of said complainant, except as above stated, and was not in their employ in any capacity whatever in connection with or a part of the consideration of the agreement for a license to use said device thereafter; and he avers for himself that he never made any proposition to complainants or to any person in their behalf for the free use of said device, provided they would allow the same to be put upon one of their engines, and employ him, and never contemplated any such proposition, and that he never held the same out in public.

IX.

They jointly and severally further assert that while said reversing device was being placed upon said engine, on or about the 8th of September, 1880, said Marsh having theretofore invented a certain new and useful improvement upon the same, which he then and there applied for the first time to such device in connection with traction engines having horizontal boilers, which said improvement was afterwards embodied and described in an application for a patent, as is hereinafter more fully set forth; that said improvement was of great importance in applying his original device to that class of traction engines, and said defendants aver jointly and severally that the said complainants, as defendants are informed and believe, contriving to injure and deprive the said defendant, Marsh, not only of the said improvement, but of the said original invention so far as the same was dependant upon said improvement, procured a patent from United States to one Andrew J. Hoag, who was at such time the foreman of complainant's works, which said patent was dated
37 July 26, 1881, and numbered 244,807, and which said patent was subsequently reissued, being reissue number —, dated ——; both said original letters patent and said reissue or certified copies thereof are now here shown; and the said defendants aver that said Hoag, at the instigation of said complainants, falsely claimed, averred, and made oath that he was the original inventor thereof, and that said patent and reissue *was* obtained with the purpose and intent to deprive said Marsh and his assignee of all and all manner of benefit that he derived from said invention and to obtain not only the exclusive right to make, use, and vend said invention on their own account, but to obtain the sole right in and to the same throughout the United States to the exclusion of all others, and to that end the said complainants procured the same

to be subsequently assigned by said Hoag to itself or to themselves by and under the name of Nichols, Shepard & Co., and they now claim to exclusively own all rights thereunder; that the said complainants have always claimed that the precise form described in said defendants' patent 236,052 was inoperative without their said alleged improvement above described as patented to said Hoag, and that by virtue of said patent, as the key to the whole invention, they had obtained the exclusive right to make, use, and vend the same, and that they would do so regardless of any rights the defendants might have in the premises.

X.

And these defendants jointly and severally aver that on the — day of —— said Marsh, as such inventor, applied to the Com-
38 missioner of Patents in due form for a patent upon said last invention; that a patent thereon was refused because of the issue of said patent to said Hoag; that, at the request of the said Marsh, under the rules and practice of the Patent Office of the United States and by virtue of the statute, an interference therein was declared between the parties hereto, to wit, between said Marsh, said La Fevre, and James Scott and said Nichols, Shepard & Co., as assignee of said Hoag; that upon said interference a large amount of testimony was taken, and that the same came on to be argued before the examiner of interferences of the said Patent Office, and that after due consideration by such examiner he adjudged that said Marsh was the sole, true, and original inventor thereof, and that said Hoag was not the true and original inventor thereof; that the complainant herein thereupon appealed the same to the board of examiners in interference cases of said Patent Office, as is provided by law, and that after said argument the said board of examiners of interferences, upon due consideration, affirmed the decision of examiner of interferences; which said decision is now on file in said Patent Office, and which is, together with the proceedings therein had, to this court now here shown.

XI.

That by virtue of the attempted fraud as hereinbefore set forth these defendants claim that the said complainant has forfeited any license or any right to any license under or by virtue of any contract as set forth and specified in their said bill.

39 XII.

That the said complainant and the said E. C. Nichols *has* knowingly and willfully and without cause and right endeavored to harass and injure these defendants in respect to the introduction and use of said invention, and in pursuance thereof have knowingly, willfully, and wrongfully claimed to the licensees of these defendants and to proposed licensees that the said patent issued to said Marsh and La Fever, No. 236,052, was null and void; that said complainants owned the only valid patent upon said invention and the

only patent involving any invention, being the aforesaid patent issued to Andrew J. Hoag, as hereinbefore described, and they have offered to protect and indemnify such parties, licensees and proposed licensees, in case they violated the rights secured to these defendants by said patent No. 236,052, and in that connection they have threatened to prosecute such parties if they used the said invention without a license from complainant as the owner of said fraudulent patent issued to said Hoag; that by such wrongful efforts of said complainant these defendants have been to a very great extent prevented from introducing said invention and deprived of the royalties they would otherwise have received, and have suffered great pecuniary loss thereby; all of which wrong-doings were a fraud upon these defendants and contrary to equity and good conscience.

XIII.

And these defendants, for further answer, jointly and severally aver that after the issue of said letters patent No. 235,052 to these defendants, Marsh and La Fever, and both before and after
40 the assignment of the one-third interest therein to said defendant, Scott, they made frequent endeavors to come to some agreement with said complainant respecting the terms of a license for the use of said improvement; that at first they were informed that the complainants did not consider the device of any value, and would not use it, and would not come to any agreement respecting its use; that subsequently they asserted that said patent was void under the state of the art; that they cared nothing for the right secured by it, and would use the invention if they desired regardless of any patent, and refused to agree to any terms whatever; that they never asserted, until long afterwards, that they were entitled to any right to use the same by virtue of any agreement made with said Marsh on any occasion whatever, and especially of any agreement as is alleged and set forth in their bill of complaint; that thereupon the said defendants, including the said defendant, Scott, filed their bill of complaint in the circuit court of the United States for the eastern district of Michigan against said complainants, Nichols, Shepard & Co., wherein they alleged the issue of said patent, the assignment of the one-third interest to said Scott, the infringement thereof by said complainant, and praying for an injunction and an accounting; to which said complainants filed their answer, by said E. C. Nichols, secretary and treasurer, neither affirming nor denying the issue of said patent, denying the validity thereof by reason of certain anticipations, and further averring that the pretended invention was worthless in the form described in said patent, and that to overcome its defects they had instructed said Hoag to devise a remedy therefor; that he had obtained a patent thereon,
41 which said patent had been assigned to the defendants; that said complainants subsequently, upon cause shown and leave procured from said court, subsequently filed, on two separate occasions, amendments to said answer or amended answers, setting up additional anticipating devices; that nowhere in said pleading did they claim or pretend to claim any license whatever or any rights

founded upon any agreement with said Marsh or otherwise; that if such agreement had existed it would have been proper defense to these defendants' bill of complaint; that testimony was taken thereon, and the same was brought on for hearing, and the said bill was dismissed by said court by reason of a technical informality and not upon the merits of said controversy, which informality does not now affect the present validity of said letters patent No. 236,052; that these defendants thereupon subsequently applied to both houses of Congress of the United States, and bills therefor have been unanimously reported by the patent committees of each house to said houses, which bills are now pending; that said complainants, in pursuance of their determination to harass and prevent these defendants from obtaining and securing their rights, endeavored to prevent the report upon an introduction of said bill, and to that end employed counsel and contested the rights of these defendants before said committee to have such technical defect rectified—first, on the ground that said Marsh had made no invention under the state of the art, and, when that argument had failed, second, on the ground that complainant had some equitable license; that by their efforts they have expended time and money and used every device to prevent these defendants from obtaining redress
42 and their just rights, which had been solemnly and formally pledged to them by the United States.

XIV.

And they further jointly and severally aver that, in pursuance of the policy of harassing and injuring these defendants, Marsh and La Fever, they instigated the said defendant, James Scott, to file his said bill in the superior court of Cook county, State of Illinois, against these defendants, Marsh and La Fever, to set aside and rescind the said conveyance of the said one-third interest of the said patent 236,052 and to rescind a certain deed of conveyance described therein, executed by said Scott to said Marsh, upon the ground that said patent was invalid, and which suit is still pending; that they have thus used said Scott as a tool to embarrass, pecuniarily and otherwise, these defendants, Marsh and La Fever, in the prosecution of their rights; that in the prosecution of said case they have obtained from said Scott and published an affidavit entitled ostensibly in said cause, but really designed to affect the standing of these defendants, Marsh and La Fever, before the public. They further aver, jointly and severally, that this cause was also instituted in this court to this end and not in pursuance of any right the complainants honestly conceived they had in the premises; that so long as they thought they could defeat said patent by reason of anticipation and so long as they relied upon the technical defense no such scheme was entertained and no defense thought of of a license set up in their said bill; that it was not conceived of nor brought
43 forward until they had failed upon every other point and it became certain that the Congress of the United States would by an act make said patent impregnable that they conceived the idea of enforcing by suit in this court a pretended license.

XV.

And the said Minard La Fever, answering for himself, says that he became the assignee of a one-half interest of the said invention throughout the United States; that he paid therefor a valuable consideration to the said Elon A. Marsh; that such purchase and assignment was made subsequent to and without any knowledge of the pretended license to the said complainants and before the issuing of said letters patent; that when said assignment was made to him it was expected that said complainant would agree upon some terms upon which they would receive a license after the issuing of said patent for the making, using, and vending of said invention; that he as well as said Marsh had frequent interviews with said Nichols in relation thereto; that in such interviews no claim was made or set up of any right to use the said invention by virtue of any arrangement, contract, or license previously made with said Marsh; that the only claim set up on the refusal, as heretofore stated, to pay royalty — that said patent was void for want of novelty; that he never knew and never heard of any such pretended license until long after litigation in United States court in the eastern district of Michigan; and he claims that if there be any right or equity in the said complainants' claim that it has no validity or force as to him, the said La Fever.

44 XVI.

And these defendants jointly and severally state that they are advised by counsel learned in the law that the bill of said complainants is multifarious and should be dismissed, in this, that it joins two distinct causes of action, inconsistent with each other:

1. An allegation that complainants have the right to use the device described in common with the public, and because the same is public property, and that defendants have no right to assert to the contrary.

2. An allegation that they, complainants, are licensees of said defendants, which said license springs from an exclusive right to said invention in said defendants.

And these defendants pray that they may have the same benefit to said objection as if they had specially demurred to said bill therefor.

XVII.

And these defendants state that they are advised by said counsel and believe that the said complainants have not made or stated any cause of action in their said bill as entitles them to any relief in equity, and, further, that all the matters and things therein stated, charged, and set up are matters and things cognizable at law; and these defendants, Marsh and La Fever, claim the same benefit and advantage of this objection as if they demurred to said bill for want of equity.

XVIII.

They jointly and severally deny all matters in said bill charged

without this, that any other matter or things material or necessary to make answer unto, confessed or avoided, traversed or denied, is true to the knowledge and belief of these defendants.

All of which matters and things these defendants, Marsh and La Fever, are ready to aver, maintain, and prove as this honorable court shall direct, and they humbly pray to be hence dismissed with costs.

ELON A. MARSH AND
MINARD LA FEVER,
By R. A. PARKER,
Solicitor for Defendants Marsh and La Fever and of Counsel.

R. A. PARKER,
Solicitor for the Defendants Marsh and LaFever, and of Counsel.

44*a* Endorsed: 162. Circuit court for the county of Calhoun. In chancery. Nichols, Shepard & Co., compl'ts, *vs.* Elon A. Marsh, Minard La Fever, James Scott, def'ts. Answer of def'ts, Marsh and La Fever. Filed June 16th, 1884. William F. Neale, register in chancery. R. A. Parker, sol'r for Marsh & La Fever.

Replication. Filed July 2nd, 1884.

44*b* The Circuit Court for the County of Calhoun. In Chancery.

NICHOLS, SHEPARD & CO.
vs.
ELON A. MARSH, MINARD LA FEVER, & JAMES SCOTT.

The replication of Nichols, Shepard & Co., complainant, to the answer of Elon A. Marsh and Minard La Fever, of defendants.

This repliant, saving and reserving to itself now and at all times hereafter all and all manner of benefit and advantage of exception which may be taken to the manifold insufficiencies of the said answer, for replication thereunto says that it will aver, maintain, and prove its bill of complaint to be true, certain, and sufficient in the law to be answered unto and that the said answer of said Elon A. Marsh and Minard La Fever — uncertain, untrue, and insufficient to be replied unto by the repliant; without this, that any other matter or thing whatever in the said answer contained material or effectual in the law to be replied unto and not herein and hereby well and sufficiently replied unto, confessed and avoided, traversed or denied, is true; all which matters and things this repliant is and will be ready to aver, maintain, and prove as this honorable court shall direct, and humbly prays as in and by its said bill it has already prayed.

CHARLES F. BURTON,
Solicitor for Complainant.

Dated — day of ——, A. D. 188–.

[Endorsed:] No. 162. Circuit court for the county of Calhoun. In chancery. Nichols, Shepard & Co., complainant, *vs.* Elon A. Marsh, Minard La Fever, & James Scott, defendants. Replication. Filed this 2nd day of July, 1884. William F. Neale, register. Charles F. Burton, solicitor for complainant.

44c *Appearance of Defendant and Order for Copy of Bill.*

STATE OF MICHIGAN, *ss:*

The Circuit Court for the County of Calhoun. In Chancery.

NICHOLS, SHEPARD & Co., Complainant,
vs.
ELON A. MARSH, MINARD LA FEVER, & JAMES SCOTT, Defendants.

Dated MAY 15TH, A. D. 1884.

In this cause, on motion of Brown & Thomas, solicitors for the defendant, James Scott, it is ordered that the appearance of the said defendant be, and the same is hereby, entered; and, on like motion, it is further ordered that the complainant or its solicitor deliver a copy of the bill of complaint in this cause to the said solicitor for said defendant within fifteen days after service of notice of this order, and that in default thereof that said bill of complaint be dismissed with costs.

BROWN & THOMAS,
Solicitors for Defendant, James Scott.

WILLIAM F. NEALE, *Register in Chancery.*

Entered in Chancery Common Orders No. 8, page 442.

[Endorsed:] No. —. The circuit court for the county of ——. In chancery. —— ——, complainant, *vs.* —— ——, defendant. Appearance of defendant and order for copy of bill. —— ——, solicitor for compl't.

45 *Answer of James Scott.*

The Circuit Court for the County of Calhoun. In Chancery.

NICHOLS, SHEPARD & Co., a Corporation, &c., Complainant,
vs.
ELON A. MARSH, MINARD LA FEVER, and JAMES SCOTT.

46 The several answer of James Scott, one of the defendants, in the cause above entitled, to the bill of complaint of Nichols, Shepard & Co., a corporation, etc.

This defendant, now and at all times hereinafter saving and reserving to himself all and all manner of benefit and advantage of exception to the many errors and insufficiencies in the complainant's said bill or complaint contained, for answer thereunto or unto so much or such parts thereof as he is advised is material to make

answer unto, answers and says that he is a stranger to all and singular the matters and things set forth in the said complainant's bill of complaint from the first to the seventh paragraph thereof, inclusive, and numbered in its said bill of complaint, and knows nothing of the matters in said paragraphs contained, except that on or about the 25th day of September, 1883, this defendant was present at a conversation between Edwin C. Nichols, secretary and treasurer of the corporation of Nichols, Shepard & Co., complainant, and Elon A. Marsh, one of his codefendants herein, in which conversation the said Elon A. Marsh admitted having entered into a contract or agreement substantially as in said bill set forth, and he believes the allegation in said paragraphs in said bill to be true.

And this defendant, further answering, says, as to the matters set forth in the 8th paragraph of said bill, that he is not informed as to whether or not the said complainant has performed the agreement entered into by it with said Elon A. Marsh, and therefore leaves said complainant to make such proof thereof as it shall be able to produce; but defendant admits that on or about the fifth day of March, 1881, said Elon A. Marsh and Minard La Fever

47 assigned to this defendant a pretended right in the letters patent set forth in said bill of complaint, but that said assignment was invalid and of no effect for want of consideration and by reason of the false and fraudulent representations of said Elon A. Marsh and Minard La Fever made to this defendant, and that thereafter and on or about the 26th day of September, 1883, he rescinded the contract and agreement in relation to such assignment of said pretended letters patent, and on the day and date last aforesaid filed his bill of complaint in the superior court of Cook county, in the State of Illinois, in equity, to recover the consideration by him paid to said Marsh and La Fever, and has not since the date last aforesaid and does not now claim to have any right, title, or interest in the said pretended letters patent or device or invention or device therein mentioned; and this defendant denies that he has claimed that the agreement claimed to have been made by and between said corporation and the said Marsh did not secure to complainant the rights to use said device in said letters mentioned on such engines as it might manufacture and expose for sale since the rescission before mentioned, nor does he now claim such to be the fact, but expressly disclaims all interest in the matter of said invention or its use by complainant, but admits that prior to the said 25th day of December, 1883, and while in ignorance of the matters set forth in said bill and other material facts, he did so claim, and, together with said Elon A. Marsh and Minard La Fever, commenced proceedings in the circuit court of the United States for the eastern district of Michigan to restrain said complainant from the use of said device as set forth in complainant's bill.

48 And this defendant, further answering, says that he admits the proceedings in the circuit court of the United States for the eastern district of Michigan, in equity, and the result thereof as set forth in complainant's bill, but he denies having in any manner been concerned in an application to the Congress of the United

States for the grant of a patent on said device or in the introduction of any bill or bills in either house of Congress on that subject.

And this defendant, further answering, denies having made any public representations touching the matter of said patent or the right of complainants to use or vend the same, but avers, on the contrary, that so far as this complainant is concerned that it is a fact well known to complainants at the time of filing of the bill of complaint that this defendant had for a long time prior thereto, then, and all times subsequent to the 26th day of September, 1883, wholly disclaimed all right, title, or interest in said pretended letters patent, the device or invention therein mentioned, or any matters therewith connected, or any interest as a partner, joint owner, or otherwise with said Elon A. Marsh and Minard La Fever in and about such device or invention or any matters therewith in any manner connected.

And this defendant submits that he ought not to have been made a party defendant in said bill of complaint, having no interest in the matter in controversy therein stated; without this, that there is any other matter or thing material and necessary for the defendant to make answer unto and not herein or hereby well and sufficiently answered unto, confessed or avoided, traversed or denied, is true to the knowledge or belief of this defendant.

All which matters and things this defendant is ready to aver, maintain, and prove as this honorable court shall direct, and prays to be hence dismissed with his reasonable costs in this behalf most wrongfully sustained.

JAMES SCOTT.

BROWN & THOMAS,
Solicitors for Defendant, James Scott, Battle Creek, Michigan.

48*a* Endorsed: 162. The circuit court for the county of Calhoun. In chancery. Nichols, Shepard & Co., complainants, *vs.* Elon A. Marsh, Minard Lafever, & James Scott, defendants. Separate answer of James Scott, def't. Filed May 15th, 1884. William F. Neale, register in chancery. Brown & Thomas, solicitors for def't, James Scott.

Replication. Filed June 7th, 1884.

48*b*. The Circuit Court for the County of Calhoun. In Chancery.

NICHOLS, SHEPARD & CO.
vs.
ELON A. MARSH *et al.*

The replication of Nichols, Shepard & Co., complainant, to the answer of James Scott, defendant.

This repliant, saving and reserving to himself now and at all times hereafter all and all manner of benefit and advantage of exception which may be taken to the manifold insufficiencies of the said answer, for replication thereunto says that he will aver, main-

tain, and prove his bill of complaint to be true, certain, and sufficient in the law to be answered unto, and that the said answer — James Scott — uncertain, untrue, and insufficient to be replied unto by this repliant; without this, that any other matter or thing whatever in the said answer contained material or effectual in the law to be replied unto and not herein and hereby well and sufficiently replied unto, confessed and avoided, traversed or denied, is true; all which matters and things this repliant is and will be ready to aver, maintain, and prove as this honorable court shall direct, and humbly prays as in and by his said bill he has already prayed.

CHARLES F. BURTON,
Solicitor for Complainant.

[Endorsed:] Circuit court for the county of Calhoun, in chancery. Nichols, Shepard & Co., complainant, *vs.* Elon A. Marsh *et al.* defendant. Replication. Filed this 7th day of June, 1884. William F. Neale, register. Charles F. Burton, solicitor for complainant.

49 *Supplemental Answer.*

To the Circuit Court for the County of Calhoun. In Chancery.

NICHOLS, SHEPARD & CO.
vs.
ELON A. MARSH, MINARD LA FEVER, and JAMES SCOTT.

The supplemental answer of the above-named defendants, Marsh and La Fever, to the bill of complaint of the said complainant.

And for further answer to the said bill the said defendants, Marsh and La Fever, without waiving any previous defenses set up, answer and say that since the filing of their said answer in the above cause that the interference cause pending in the Patent Office of the United States, heretofore mentioned in said answer, was ap-
50 pealed *by* the Commissioner of Patents by the said complainant, Nichols, Shepard & Co., and that said appeal came on to be heard by said Commissioner, who subsequently rendered his decision thereon in favor of the defendants, Marsh and La Fever, which said decision was to the effect that said Marsh was the true, first, and original inventor of the invention and improvement described in said interference proceeding and claimed by complainant as the assignee of Andrew J. Hoag; and that thereupon letters patent of the United States was issued to these defendants, which letters are dated November 25th, 1884, which said letters patent are now in full force and vest the exclusive right of said invention in these defendants, and to which for greater certainty reference is hereby made.

And these defendants, for further answer, say that subsequent to the signing, sealing, and issue of the aforesaid letters patent in accordance with the decision of the Commissioner of Patents upon said interference proceedings the complainant in this cause, for the purpose of destroying the rights which these defendants have in and to said invention by virtue of the aforesaid letters patent and for the

purpose of securing to themselves the sole and exclusive right to said invention throughout the United States, did, on or about the — day of ——, file its bill in the supreme rourt of the District of Columbia, in equity, where, after reciting the issue of said letters patent to said Hoag and the assignment by said Hoag to itself and the issue of aforesaid letters patent to these defendants, and averring that said Hoag was the first and original inventor of the invention described therein, — did pray, among other things, that
51 the aforesaid letters patent so issued to these defendants be annulled, cancelled, set aside, and held for naught; that these defendants have appeared thereto and answered the said bill and defend- their rights secured by said letters patent, and that the issue made by said pleading is now pending in said supreme court of the District of Columbia; all of which will more fully appear by reference thereto, which is hereby prayed.

And these defendants, for further answer, say that the cause heretofore mentioned in their answer, having been heard in the circuit court of the United States for the eastern district of Michigan, in equity, between these defendants and James Scott, as complainants, and the said Nichols, Sheppard & Co., in which a decree was entered against these defendants, has been by the defendants herein duly appealed to the Supreme Court of the United States, and that the said Court has, according to the rules and practice in such case, allowed said appeal, and that thereby all of the questions involved in the decision of said cause, including the validity of the letters patent on which the same was founded, are now pending the decision of the Supreme Court of the United States; and they further say that the defendant in the said cause, Nichols, Shepard & Co., has also filed its claim of appeal in said cause to the said Supreme Court of the United States in the circuit court of the United States for the eastern district of Michigan, in equity, which said appeal has been allowed by the said circuit court.

And these defendants further say that they have, since the commencement of this suit and since the filing of their answer herein, filed their bill of complaint in the said circuit court of the
52 United States for the eastern district of Michigan, in equity, against the said Nichols, Shepard & Co., reciting in the usual form the issue of the aforesaid letters patent No. 236,052, and also the aforesaid letters patent issued at the close of said interference proceedings No. 244,807, and charging infringement of the aforesaid letters patent by the said complainant, Nichols, Shepard & Co., in the usual form, under the rules and practice of said court, and praying that the said Nichols, Shepard & Co. may answer said bill, and that the said court will issue an injunction to restrain said infringement, and also for an accounting for profits; that thereby the said complainant in this cause is afforded an opportunity of trying all questions and matters which are a legitimate defence to the said charge of infringement in said bill contained in the tribunal provided for that purpose by the statutes of the United States, and that all the matters and things set forth in the bill of complaint are

fully available to complainant herein in said court as matters of defense.

And they pray that this their supplemental answer may be considered in connection with the original answer, and that they may be hence dismissed with their costs and for such other and further relief as to this court may seem meet.

(Signed) MINARD LA FEVER.
ELON A. MARSH.

R. A. PARKER,
Sol'r for said Defendants.

52*a* Endorsed: Circuit court of Calhoun county. In equity. Nichols, Shepard and Co. *vs.* Elon A. Marsh, Minard Lafever, & James Scott. Supplemental answer of Marsh & Lafever. Filed June 22nd, 1885. Louis C. Miller, deputy register. R. A. Parker, sol'r for def'ts M. & L.

To Charles F. Burton, Esq., sol'r for complainant:

You will please to take notice that on the hearing of said cause May 26th, 1885, if that be a day of hearing, I shall ask the said court to permit the filing of a supplemental answer therein, of which the within is a true copy, pursuant to a notice given in the open court.

May 14th, 1885.

R. A. PARKER,
Sol'r for Def'ts Marsh & Lafever.

The above supplemental answer may be filed without ob-
53 jection, provided that the original replication shall be considered as a replication to this answer also.

Dated Monday, May 25, 1885.

CHARLES F. BURTON,
Sol'r for Compl't.

Accepted.
R. A. PARKER,
Sol'r for Def't.

Testimony Taken in Open Court.

The Circuit Court for the County of Calhoun. In Chancery.

NICHOLS, SHEPARD & Co., Compl't,
vs.
ELON A. MARSH, MINARD LA FEVER, and JAMES SCOTT, Def'ts.

Proceedings and testimony taken in open court, at Marshall, June 22nd, 23rd, and 24th, 1885, in said cause.

Appearances: For complainants, Charles F. Burton, Edward J. Hill; for defendants Marsh and La Fever, R. A. Parker; for defendant Scott, Charles E. Thomas.

Before the taking of testimony Mr. Parker, for defendants Marsh

and La Fever, objected to the jurisdiction of the court on the ground
that the bill and answer raised a question of the validity of
54 certain letters patent of the United States over which this court
had no jurisdiction; which objection was overruled.

The depositions of Horatio N. Land, William E. Otter, Louis H. Hasselman were offered by Mr. Burton and received without objection.

The deposition of James Scott was offered; whereupon said Parker said, I would prefer to have you waive that at present, because I want to see Mr. Marsh. The allegation of the incorporation of complainant was admitted by Mr. Parker, for the defendants Marsh and La Fever.

Whereupon EDWIN C. NICHOLS, a witness in behalf of complainant, was sworn, and testified as follows:

My name is Edwin C. Nichols; residence, Battle Creek, Michigan; am 46 years of age, and am secretary and treasurer of the complainant and have general charge of the corporate business. I know and have known Mr. Marsh six or seven years; have known him well. He was in our employ as a machinist for two or three years, I think, prior to 1880.

There was a special feeling of friendship between him and myself more than between us and other employees. I had known him as a young man at the time he was working for us in rather poor health. My attention was attracted to him in various ways about the factory, and I had also been moved to take him out of the shop at one time and put him on the road, so that I knew him rather
better than the average mechanics who worked for us.

55 Letter dated July 15th, 1879, shown witness, who testified
that it is in Elon A. Marsh's handwriting; was directed to me personally and was received by me.

Letter marked "Exhibit 1."

Letter marked "Exhibit 2" is shown witness; says that this letter was written by Mr. Marsh.

Witness testified further: I knew of Mr. Marsh's invention or claim of an invention of a reversing device for steam-engines first by letter from Mr. Marsh.

Letter marked "Exhibit 3" shown witness, who testified:

Yes; that letter dated February 6th, 1880. In that letter he calls my attention to the reversing device. I received a further letter from him. (Witness shown "Exhibit No. 4," dated April 21st, 1880.) That is it. The company was then manufacturing portable and traction engines on which we used as a device for reversing a triangular frame in which there were two pinions. The movements of the frame reversed the motion, not of the engine, but of the portable apparatus.

After receiving these letters from Marsh he called on me, in the summer of '80, several times. I first saw a wooden model of his device, and then afterwards went with him to a room in the third

story of one of the buildings in the city, in which he had a small engine upon which was this reversing device, which he put in operation while we were there. I examined it somewhat closely. It was a small perpendicular engine, the device and engine being very small. This was in warm weather; probably May or June; possibly July.

Q. What further took place between you and Marsh with reference to the use of that?

56 A. Well, he came to see me, as I said, several times about it. I went with him to this place where I saw this little model engine in operation. He came to me again in August and talked about it; desired me to take hold of it—see if we could introduce it.

Q. Did you finally conclude to take hold of it—introduce it?

A. Not at that time. We had several interviews—that is, he came to the shop frequently. I would see him occasionally as he came in; however, he came to me in the latter part of August especially on the matter.

Q. Will you state whether or not Marsh was anxious to have you take hold of it?

A. He seemed to be very anxious, indeed; talked about it repeatedly; came to see me quite a number of times—five or six times usually.

Q. What inducements, if any, did he hold out to you to take it?

A. Well, he suggested that he thought that it would be a good device for our class of engines; that it could be made successfully. He thought it would be comparatively much cheaper than any other device that would accomplish that result—that is, the reversing device.

Q. What, if any, offers did you make to him?

A. I put him off several times, really because I was extremely busy with other matters and had hardly time to consider it fully, but he finally came, spent quite a little time, and talked about it. This was the latter part of August or fore part of September, and at that time talked it up generally and specifically. He told me that he

57 very much desired to have our people take this thing up—see what we could do with it; make a thorough and complete test of it; have it put upon one of our engines, and have the device thoroughly and satisfactorily tested and determine its value. He was very sanguine it would be successful; he thought I was not treating him properly by not helping him at the time; he was poor, and had bad luck on various things, and was in hopes he could get something out of this. We talked it over very generally. Do you wish me to go on and state just what occurred?

Q. State as nearly as you can remember just what occurred at the interview in the latter part of August or first part of September, just before you did finally adopt the device.

A. After a long conversation about it he stat*ing* that he felt very anxious, indeed, to have this done and done at this time, because it was the close of our season; if we couldn't do it at that time, why it would have to be postponed indefinitely. He urged and solicited

that I would permit him to apply one of these devices to an engine; he would make no charge for his own personal services upon that work; we were to furnish the engine and assist in making patterns.

Q. Any special engine?

A. We had but one engine at that time to which it could be applied; that engine we were fitting up expressly for our State fair work; he knew of that engine and I knew of it also; that was the only engine to which this could then be applied. He proposed that I permit this to be done; have our men do the work—that is, make
58 the castings, do the forging, finishing, and turning, help making patterns, &c.; he would do what he could in general way; have the device applied and make a good, thorough, and complete test of it. I was quite reluctant to do it, because I could see that it was going to involve considerable expense. We were pretty well satisfied with the device that we then had, but he urged very strongly upon the matter. I felt a very uncommon interest in him, and I finally said to him: "Well, if we can make some satisfactory arrangement I am willing to do this." His proposition to me was that if we would do that, if we would permit the device to be put on and would furnish material and do such necessary work as we would have to do and furnish the engine, &c., that he would do what he could personally in the matter, and if that worked—his statement was: "If the thing works, if it is satisfactory, or if you want to adopt it, your people may have it for what expense you are at—what expense and trouble; you may use it upon all engines of your manufacture, and I will make what I can outside." Upon that I went out with him, out of the office, and gave the necessary instructions to the superintendent, and told him that Mr. Marsh was to be allowed free use of anything and everything we had and whatever help and assistance he needed. I told him to have the engine brought to the shops, where we could get at it, and thereupon Mr. Marsh went to work.

Q. Was the device put upon that engine?

A. It was.

Q. How long a time did it take to put it on?

A. Well, they were working at it seven, eight, nine, or ten days before it was finally made successful.

Q. Did you ever see the device after it was finally mounted?
59 A. Yes, sir.

Q. Can you explain what it consisted of as it was finally put upon the engine there? I will show you, to aid you, those two papers, or, rather, two parts of one paper, and ask you if what is shown in there represents in any way what was put upon the engine and if it represents the whole of what was put upon the engine.

(Witness examines "Exhibit 5.")

A. This paper drawing, Fig. 1, shows the device—the substance of the device. There are some parts here that were not applied in that exact manner.

(Paper marked "Exhibit 6" shown witness.)

Q. Does that represent more nearly the device which was put upon the engine?

A. Fig. 2, Ex. 6, is substantially the exact manner they are applied, with one or two little mechanical exceptions. For instance, a slot cut at "S" in Fig. 2 was not in the device as applied there.

Q. With or without the drawing, will you explain what was put upon that engine in the early part of September in pursuance of the contract you have mentioned?

A. The device was made of iron mainly. It consisted of a sleeve pivoted around the main driving shaft of the engine and two intergearing cog-wheels of equal diameter, one fixed on the main shaft, the other engaged in the second wheel, which had a shaft lying in a box forming a portion of this main sleeve; sleeve was so arranged to swing in the arc of a circle around the wheel which was attached to the main shaft. To the second wheel there was a wrist pin, to which the valve rod connected by which the valve was
60 operated, and by the movement of a swinging arm and gear around the shaft the engine was reversed. The swinging arm was swung from one place to another on the engine that was sent to St. Louis by a projecting arm, to which a long reach rod was attached, running to the hand of the operator, connecting with an upright lever and quadrant, by which the movement of the swinging arm was controlled. The swinging arm was prevented from going too far either way by engaging at its extreme end with what we term stops—that is, the arm in its upward and downward movement, in its movement in the arc of a circle, was brought to rest against two fixed or adjustable stops being placed upon this particular engine, a piece of iron bent in a peculiar shape, with a suitable set-screw or set-screws in it and the arm playing between these two points. Its extreme limit rested against this particular screw. This is substantially shown in Fig. 3 of Ex. 6, which is mechanically its movement; not precisely that identical form. Marsh told me that he had applied for a patent and it had been rejected. He said he didn't know whether he would get it or not, but he was in hopes to do so.

Q. In putting the device upon the engine what change is necessary in the engine itself to what it would have been if the device had not have been put upon it?

A. We stripped part of our device for reversing a portion of the triangular frame mentioned. It was necessary to take off some of the parts. The eccentric which moved the valve rod was removed.

Q. That would be in about the same place where this device was attached?

61 A. Substantially in that place. The eccentric and valve rod were removed and a part of this reversing device which we had on. I think we removed the frame or its attachment for holding the frame and the eccentric and the valve rod. I don't now think of any other part necessary to be removed from that particular boiler.

Q. This device was put upon there?
A. It was put upon that boiler.
Q. Did it necessitate the drilling of any holes in the boiler?
A. Yes; there were some holes necessarily drilled or punched through the boiler.
Q. Did he put this on?
A. Yes, sir.
Q. Did it make any necessary changes in the steam-chest or in the cylinder?

Question objected to by Mr. Parker that there was nothing alleged in the bill as to any change made in steam-chest.

A. It required the cutting out of a portion of the steam-chest or its interior face or edge. The steam-chest then in use was too small to permit a proper throw of the valve. It was found in reversing that the valve came in contact with the steam-chest end, which necessitated chipping them out. This was peculiar to this mechanism—a necessary feature due to its moving in the arc of a circle, which shortened the distance at one point between the valve gear and the valve.
Q. Do you know whether or not the chipping away of the steam-chest in any way injured it permanently?
62 A. Yes; it destroyed it—its value—for any commercial purpose. We threw it away on its return from the fair. The steam-chest is bolted on the face of the cylinder with six or more bolts, four of which are in the ends of the chest and lie inside of its interior. In chipping away to form a space for the movement of the valve it left either no metal at all or too little metal between the hole through which the bolt goes, so that it became unsafe and unmechanical.
Q. Do you know whether or not the use of the device necessitated a change in the pattern of the steam-chest?
A. Yes; we found it necessary to lengthen the steam-chest in all engines upon which we had used it and the cylinder to correspond.

To this defendants objected, and moved to strike it out, because the changes made by reason of the adoption of the device *is* not material.

Q. What became of that engine?
A. After being tested, so as to be safe to send out, it was placed in the paint shop and immediately painted very hurriedly, and then sent for exhibition to a State fair in Springfield, Ills., and *the* St. Louis, Mo.
Q. Who went with it to exhibit it?
A. Mr. Bradley and Mr. Ellsworth; also Mr. Marsh.
Q. How came Mr. Marsh to go with it?
A. It came about in this way: After the engine had been tested Marsh came to me and made a very earnest appeal that I allow him to go with that engine to exhibit it; said it would be a great help to him; a help to the device. I told him I hardly saw the neces-

sity for his going, as two men had already been engaged to go,
63 and we had but one engine and one separator to exhibit. He still urged very strongly if he could go with the engine it would give him an opportunity to exhibit the gear to other manufacturers specially interested in that class of machinery, it would be an excellent thing for him; further, that he could explain the gear to our own party, our own agents, and our own friends better than anybody else. I remember further his saying that if anything should happen to it, requiring an adjustment or otherwise, that he would be able to do it better than anybody else. I felt it was an extraordinary expense to send him with it, and he urged very strongly, and urged it upon the ground that if he could accompany it he would be able to show it to our own people, be able to show it to other manufacturers, and induce them to adopt it. I consented he might go, and he then said he couldn't go unless I would pay his expenses, and it finally resulted in my saying he might go, we would pay his expenses; would pay him wages. He was to go and exhibit the engine in the capacity of an extra hand, so that he accompanied these other two men that I have spoken of.

Q. What do you know about his expenses having been paid?

A. I know his expenses were paid.

Q. What do you know about his being paid wages?

A. He was paid wages.

Q. What wages?

A. $2.25 a day for his time, and his expenses in addition. According to the cash book of complainant he was paid for 14 days to Springfield and St. Louis fairs, and his cash expenses amount-
64 ing in all, as our books show, to $86.50. The entry in the book is made in the handwriting of Franklin T. Roberts, who was our chief clerk at the time, in the pursuance of his duties, and who is now dead. (Entries were made on page 217, Oct. 11th, 1880.) The entries were as follows:

"Expense account: Paid Marsh 14 days to Springfield and St. Louis fairs, at $2.25, $31.50; paid Marsh cash expenses to Springfield and St. Louis, $55.00."

Mr. BURTON: I don't wish to offer the book in evidence, but I wish to offer the entries. Counsel may have permission to examine the book if they desire.

Mr. PARKER: We want the book and we want the other book containing all the entries of this matter.

The COURT: Of course it is not to be expected that the court will require a book to go permanently on file as an exhibit, but for the use of this trial counsel should have the privilege of having placed upon the record such matters as he deems proper, after the usual preliminary test.

Q. Is that a book of original entry?

A. Yes.

Q. Are there any other books of original entry that you have in your possession in which there are entries relating to this matter?

A. Not that I know of.

Q. So the other entries which are made are copied from those?

A. I think it must be so. This is the only cash book—that is, the cash blotter in use during the months for which it
65 stands, and any entries other than these would be copies of the cash-book entries. I have no recollection of any day-book entries relating to this transaction whatever.

Q. Where would the next entry of this item go from there?

A. It would be copied into the regular cash book by the book-keeper, from there posted in the ledger. This is the original cash blotter.

Q. Have you any personal knowledge about that being paid?

A. I have a personal knowledge of $50, because I directed at the time I made this agreement with Marsh that he be paid $50, which is a part of this. That particular $50 was ticketed, as we termed it. Our custom is where we have men on the road to furnish them with money and make the credits at the end of the journey; in this case the $50 was ticketed, made as a cash item until he came back. It was then accounted for and appears on this book. We do this to save the multiplicity of entries.

Q. Do you know whether or not Marsh's presence was necessary at the exhibition of these engines or whether he took the place of another man?

A. It was not necessary at all as far as exhibiting either the engine or separator or both were concerned. We had two men and we very frequently have but one. I mean two men beside Marsh.

Q. Did Marsh bring suit against your company in the United States court?

A. Yes; he and others.

Q. At that time had you been manufacturing engines on which you had used this device?

66 A. Yes; we commenced using this device immediately on the starting up of our shops in the fall of 1880 and are yet making them. The shop started up about the 1st of October; this trial engine returned, I think, about the 10th of Oct.; we commenced immediately after the return of the trial engine to prepare to make the device and fixed up our patterns; we modeled one that had been on this engine; made our new patterns and began making engines with the device upon them.

Q. Why did you begin manufacturing the device at that time?

A. We thought it a successful device and thought it to be for our interest to apply it and adopt it.

Q. You were aware that Marsh was applying for a patent?

A. Yes.

Q. What rights did you think you had to manufacture it under his patent?

A. Why, the right which I supposed we had from the agreement which we made with him.

Q. You relied upon that, did you?

A. Entirely so.

Q. When this engine went out to the State fair what was done with it?

A. It is our purpose to exhibit our engines—all the goods we make—at most of the State fairs in States where we have trade; to send out goods that we could show up to our agents, farmers, and purchasers or intending purchasers, and to parties who might be interested in our class of goods.

Q. How long have you been engaged in manufacturing of this kind?

67 A. The corporation was organized in '59. Nichols and Shephard, whom we succeeded, began in 1848, and the two have been continuously manufacturing since '48; we built our first traction engine in 1878.

Q. Was there any special reason why Marsh should desire to have the device put upon this exhibition engine?

A. In the conversation that we had he knew perfectly well—indeed, I told him—that this particular engine was the only engine that we had that we could exhibit at these two State fairs, and he was familiar enough with our business and the State fair exhibit to see that it would be an opportunity for exhibiting the engine to a better advantage, a great deal than it would at any ordinary local place. Of course our anxiety was to put the engine where we could show it up to the most people to the greatest advantage.

Q. After they began manufacturing and before the first suit was brought in the United States court did you have any talk with Marsh about your right to use the device?

A. I don't remember any particular talk about our right to manufacture. The first notice that I remember of any lack of right to manufacture was along in February of '81. I think this was a written notice.

(Witness examined paper marked Exhibit No. "7.")

Q. You received this notice, did you?

A. Yes.

Q. Do you know how that notice came to be served on you?

A. I do not recollect.

Q. Do you remember any conversation with Marsh about the time the notice was served?

68 A. I think he came to me at that time with a form of a license that he wanted us to take out.

Q. What was the date of the notice?

A. Feb. 11th, '81.

(Witness shown paper marked Exhibit No. "8.")

Q. That was the license presented to you for signature, was it?

A. It was.

Q. Did you sign it?

A. No.

Q. What conversation did you have with Marsh at the time it was presented to you?

A. He came into the office and, without any preliminary, as I now recollect it, handed me that paper, Exhibit "8." I looked it over and said to him, "Why, Marsh, you don't mean that we are to

pay a license, do you?" He said, "Yes." "Well," I said, "that is rather a strange thing, isn't it? You know very well we had a different arrangement from that." Well, his reply I remember very well; his reply was, "Well, I can't help that." I simply said to him I didn't propose to do anything of this kind, dismissed it very briefly, and that ended it. We continued to manufacture and use the device. Suit was brought in the United States court and there was a decision.

Q. After that decision in that court did you have any conversation with Marsh about a license? I call your attention to a particular conversation which took place in September, '82.

A. Yes, sir; I remember the particular conversation which took place in September.

Q. Who was present?

69 A. Marsh, Mr. Scott, and myself—that is, James Scott, one of the defendants.

Q. What was said, as near as you can remember?

A. The conversation began with Mr. Scott. I was on my way out from my house and met Mr. Scott near the front gate, who said he wished to see me. I went back into the house with him. He had been in my library but a few moments; he barely passed the time of day, and talked about various things; little or nothing had been said regarding this controversy between Marsh, La Fevre, and Scott, and Nichols, Shepard & Co., when the door bell rang and Mr. Marsh came in. We then stayed around for five or ten minutes talking about this case, mainly about the litigation—the case that had just been decided a few months before. The conversation was of that character indicating a desire on their part to get something like a settlement or adjustment of the matter. We talked at random about it without getting to anything at all for a few moments; finally, they both arose to go; in the meantime Mr. Scott had said that he wished to talk about having the matter settled; he wanted to have it adjusted, something done. Mr. Marsh also expressed a desire to have the litigation ended. I simply suggested that I thought the litigation and trouble that we had been to had been an outrage upon us; that so far as I knew we had simply defended ourselves against what we deemed to be very unjust and improper attacks upon us. The close of the interview resulted in my saying to Mr. Marsh, as the two parties stood ready to retire from the room, when I repeated that I considered the matter had been an outrage upon us; then I said

70 to Marsh, "Because you know, Mr. Marsh, we did have an agreement that we were to have the right to use this device upon all of our engines." Marsh replied, "Yes, that is so, but you didn't have it in writing." I said, "No, we didn't have it in writing, but you would have given it to us in writing if I had asked you, wouldn't you?" He said, "Yes, I would, but you didn't ask me." Thereupon we parted, and they came away.

Q. Do you remember the fact that the paper which was put in evidence in the infringement suit at Detroit was reported to you that it was not signed by the Secretary of the Interior, and that you had a conversation with Marsh with reference to that at any time?

A. Yes, sir; I remember such a conversation. I remember that it was reported to me that the Secretary of the Interior had not signed the paper, and I had a conversation with Marsh, Scott, La Fevre, and Converse touching that very thing in Mr. Converse's office. It came about this way: I had known for a long time that the paper was not signed. In the spring of '82, January, February, or March, I learned in some way that Marsh, La Fevre, and Scott had discovered that the patent was not signed, and I called on Converse and told him I wished he would see Marsh, La Fevre, and Scott and ask them to come to his office I would like to see them; he did so, I think, the very next evening; we all assembled there. I told them that I understood that they had discovered that their patent was not signed; that I had known it for some time; that now was a pretty good time to stop and consider the whole matter, call a halt upon the litigation which they were bringing upon us. I told them
71 that we considered the lack of signature a very serious matter; that I thought it went practically to destroy the validity of the patent if it was fully brought out, and I called their attention to the fact that in my judgment and in the judgment of the best counsel which I had in the case it seemed to be a very serious matter, and I had asked them to come there because it seemed to me that it was a matter that they had better talk over and see whether they hadn't better have an end to the litigation, and try, as I remember now, to save the pieces.

In that conversation we talked it up quite freely. They didn't seem to agree with me with regard to the character of the defect in the instrument; at least they treated it very lightly, I thought. I told them I thought it was a very serious matter, and that if they now, notwithstanding all the trouble which they had put us to and all the expense we had been to, if they were willing to drop the litigation and give us the rights which we had originally in the thing, which we bought and paid for when the thing was in its infancy—that is, a right to use it on our engines—that I was willing as far as I could to help them straighten it out or do anything to fix it up to save them from what I thought to be final disaster in regard to that patent. We came to no agreement at that time. That was the substance of what I said. They talked as though they thought it was merely a clerical defect; it could be easily remedied, and they intimated very strongly that they thought I was pretty badly scared; that this interview was not for the purpose of helping them, but to help myself out.

Q. What was the date of this conversation?

72 A. I have no means of fixing it, except the knowledge that it was after they had obtained knowledge of the fact of lack of signature, and I think it was before the patent had been sent away for signing. It was about that time, anyway.

Q. Was it before you had made any motion to take advantage of it?

A. Yes; the interview, when Mr. Scott and Marsh were at my house, was in September; it must have been 1883. The first suit was decided by Judge Brown in Detroit. Following a new suit was

instituted in the same court on the same subject-matter, which was dismissed, and then recently a new suit has just been begun.

Q. What became of the cylinder of the engine that went to St. Louis?

A. That was replaced by a new one. It was necessary to make a larger steam-chest, and that larger steam-chest would not fit the face of a cylinder.

Q. It became necessary to make new patterns?

A. We made patterns for the cylinder or steam-chest.

Cross-examination:

I have been an officer of Nichols, Shephard & Co. since 1879, and am still an officer in the same capacity. I was secretary and treasurer when this agreement was entered into.

Q. Were you acting in any other capacity in relation to your company at that time?

A. The same official position—secretary and treasurer.

Q. Were you acting in any other capacity?

73 A. Not at the time in any official position. John Nichols was president. The directors were John Nichols, David Shephard, E. C. Nichols, Cornelius Aultman, Franklin T. Roberts.

Q. Was there any meeting of the board of directors ever held on this matter?

A. Not that I know of.

Q. Is there anything in the records of the company with reference to the adoption of this device?

A. Not to my knowledge; no, sir.

Q. When did you first report or say anything to the other directors about having made this agreement with Marsh?

A. I talked it over with the president and vice-president very soon afterwards; probably a week or ten days or two weeks. I mentioned it incidentally. I think it was after the engine went to the fair. I have no recollection of any special conversation about it with them. Our board of directors doesn't meet very frequently.

Q. Did they give you any authority to make this arrangement?

WITNESS: Special authority?

Q. Any authority at the time when you made it.

A. No special authority, sir.

I think I was away when the engine came back; think I left about the first of October, and was gone until near the first of November. Mr. Hoag was the superintendent of the works. He is now dead. During September the works are supposed to be idle—that is, little repairing being done—preparing for the coming year; that is our season of life, as we term it. The superintendent has general charge of the men employed at that time. Foremen have charge of the machinery in different departments.

74 Q. During that year who had the direction over the kind of machinery that you were building?

A. Well, I suppose that is somewhat divided. Really, as a matter of fact, I perhaps had more to do with the general construction of goods than anybody else.

Q. Were you general manager or anything of that kind?

A. In substance, I have been general manager for a great many things; was practically general manager at that time. Our by-laws provide that the treasurer has charge of the product, selling, and general character of the goods to be made. While I am not the president or general manager—in fact, we have no general manager—I have had pretty much all of the business fallen to me for many years.

Q. Were you general manager in '82?

A. We have no office as general manager. If you had questioned whether I had exercised rights and performed duties of general manager I should have said yes, in substance.

Q. All you did in this matter and the conversation that you had with Marsh respecting obtaining an interest you did by virtue of that position. Am I correct?

A. I hardly know just what inference you might draw from my position. I said that I had general charge and conduct of the business of the corporation for many years.

Q. Acting in that capacity, did you make this arrangement with Mr. Marsh?

A. The arrangement was made in behalf of the company by me.

75 Q. Have you had any negotiation with Marsh on your individual account in regard to this matter?

A. I had interviews with him in which my individual interest was uppermost in my mind. These were in the fall and winter after this device was put on our machines. The substance of those interviews were general talks about the points of the invention. I think there were two of those interviews; both at my house. They were in the fall, I think, preceding the issue of this patent; probably in November. I invited both Marsh and La Fever to come to my house, and we had a general talk about mechanics—this valve gear and various things of this kind relating mainly to the pending of the patent, &c. I had some interest in knowing how they were getting along. No proposition was made on either side that I would take hold with them; we never reached that. The talk was leading that way; at least, I so intended it. I know what I had in my mind.

Q. Can you state the conversation when you, Marsh, and La Fever were present?

A. I know the general drift of it. I think I asked them how they were getting along with the pending application, and talked in a general way about some of the difficulties that attended getting out good, substantial broad-claimed patents. That was the general character of the interview.

Q. Did you speak anything about having pooled in with manufacturers to form a pool at Washington?

A. It came up incidentally. Away along in '76 a patent company was formed by Aultman, Taylor, Shephard, John
76 Nichols, and myself in which we agreed to put into a common fund a certain amount of money for the protection of some general patents we all owned or which we might afterwards

buy. I remember speaking about it. Mr. Shephard and Nichols are officers of the complainant and were at that time.

Q. Did you say anything to them at that time that you could make or break that patent at your will—the patent they would have obtained if they obtained one?

A. I should think not; I have no recollection of saying anything of that kind.

Q. Did you express any doubt about their being able to obtain a valid patent, but that you could through this pool?

A. We had a very friendly conversation, talking about the difficulties of——

Q. Answer the question. (Last question repeated.)

A. I have no recollection of making any particular statement of that kind. I know in general about what was said.

Q. Didn't you then state that you had no personal interest in the matter of this invention?

A. I don't think I made any such broad statement as that.

Q. Didn't you then also state that the occasion of the interview was purely because of your friendly interest in the matter?

A. Quite likely. I took a very friendly interest in their affairs.

Q. But that you had no personal interest in the invention?

77 A. I had no personal interest in it at that time. I might possibly have said it.

Q. Didn't you say that all you had that interview for was to apprise Marsh and La Fever that every dollar they put into the matter would be sunk, and that you would advise them not to spend any more of their hard-earned money in that direction?

A. I have no recollection of making any such statement as that. I don't think I did in any such broad terms. I may have advised them that they might possibly put more money into the patent than they would get out; that is quite a common experience with people, I suppose.

Q. Did you say anything at that time about the complainant having any license to use this invention?

A. I don't remember anything of the kind coming up.

Q. Didn't you say on that occasion that the complainant refused to take one, or entertain any proposition for a license?

A. O, no.

Q. Was the matter discussed?

A. That is my recollection.

Q. You may be mistaken?

A. I have no doubt that it is so. I don't know what the date might have been of this interview. I think in November, probably; can't say whether it was the fore part.

Q. Do you recollect the day before meeting Marsh and asking him to call at your residence the following evening, and his saying that La Fever owned a half interest, and he thought La Fever ought to be present, and you assented to it?

78 A. I don't remember; quite likely; it might have been. I have no doubt I asked him to come.

Q. Do you say that was purely on behalf of your personal matter?

A. I had in my mind shop matters. I took a personal interest in the patent, in the handling and management of it; nothing was said about my taking or asking upon what terms I could take a personal interest. We talked about things generally. I was leading up to that if it seemed to be desirable. I had those two interviews, and rather changed my mind. I don't know that I wanted them for partners. I was not acquainted with La Fever.

I couldn't say how long this first interview was after I came back from my absence. I know the engine came back on the 10th of October or about that time—by the time the fairs were over. I don't know of my own knowledge. I think that we waited before commencing manufacturing until this engine returned and report was made on it before they decided to go on building anything in that way.

Q. Who made that report?

A. Well, it was talked over with the men that went with it—Bradley and Ellsworth—and I think Marsh had an interview in regard to its operation. I was not present on the return of the engine. I talked it over with Bradley and Ellsworth personally after I returned.

Q. Did the complainant commence the manufacture until you had talked it over with Bradley and Ellsworth?

A. About that time; about the first November I came back,
79 and we began right immediately about that time. Our shop started up—started up about two or three weeks before that. This interview with Marsh and La Fever was probably in the month of November.

Q. Do you know when you had that interview whether complainant had commenced manufacturing engines with this reversing device?

A. I think we made new patterns for the gears at that time; whether we had got any engines with the gearing on or not I don't know. These interviews were not for the purpose of finding out whether we could use that device, and upon what terms; I say this positively.

I don't remember meeting Marsh the latter part of November and his telling me that he had received notice of allowance of his patent. I did not state to him on any such occasion, "Yes; I know all about it. I knew of it before you did, and I can tell you now that your patent is not worth a straw." I never made any such statement.

I had three or four interviews with him before he came to the shop to put on the reversing gear. I don't remember of answering the letter of February, 1880.

Q. Do you recollect of his calling about the 6th of February, '80, and showing you a diagram of this valve gear; that Mr. Hoag was present, and that you and Hoag both claiming that it could not be made to work?

A. I remember his calling with a little drawing of the gear; it was a long time prior to its application at our shops.

Q. Was it not about the 10th of March that you saw this device work on the little engine?

80 A. It seems to me that it was later. I think it was in midsummer.

Q. On that occasion didn't you express surprise that it was a success?

A. I have no recollection about that.

I don't remember that Marsh told me at that time he was applying for a patent or preparing his application for one. I have no recollection of saying at that time that so simple a device must be old, and that he ought not to squander any time or money on it.

He came to me several times after that. I had an interview in which he did request that it would be put upon one of our engines, and I rather demurred.

Q. On that occasion wasn't the only thing that was said with reference to putting it on was that he would put it on at his own expense and not mutilate the engine?

A. There was no proposition from him to put it on at his own expense. He proposed to put it on without any charge for his personal work. Nothing was said about not mutilating the engine or leaving it in the same condition as he found it, because he couldn't do it. I knew this at the time. I could certainly surmise it. The quadrant would have to be bolted to the boiler. I could foresee that. I did not know anything about the stop plate being bolted on at that time. If it had failed we would have put back the old device, I suppose.

Q. Didn't he propose to put it back if you would allow him to try it?

A. Nothing of that kind was talked about at all; I think not contemplated.

81 Q. Wasn't a failure contemplated?

A. If I had contemplated a failure I don't think I would have gone into the arrangement at all. I contemplated something more than a failure.

Q. You didn't consider it an experiment?

A. Entirely an experiment. There was no talk about what would be done in case of a failure.

Q. Was there any provision made in case it should fail to replace the device at any time?

A. I directed the men who went with the engine to take the old device with them at that time, for fear this might not show service, prove defective, or break down.

When we first talked this matter over about putting it on the engine I think Mr. Hoag was not present and anxious to have it tried; not at the time Marsh and I made the arrangement. Hoag had spoken about it to me several times. I don't remember that he was present when Marsh was there.

Q. Was he present on any of these occasions of these conversations about putting this on?

A. He was present when I gave the instructions what was to be

done; Marsh and I went out of the office to Mr. Hoag and I told him what to do.

Q. Was that the only occasion he was present?

A. I can't say.

Q. Was there anybody else present in any of these interviews with Marsh in which negotiations were had?

A. At these interviews there must have been somebody else in the room.

Q. Who were there?

A. Clerks who worked about the office; I had my desk in the office with them.

82 Q. Do you know of any special one that you can say was there?

A. I presume that they were in and out; I have no means of identifying any one man as a particular person present at that one time. It is an open office; I had my desk with the rest. Marsh would come to my desk and talk about it.

Q. On the first occasion didn't you tell Marsh that the policy of the company was to only use well-known and well-tried devices and let others do the experimenting?

A. I think not.

Q. And that your folks wouldn't consent to allowing it placed on there?

A. I never told him that.

Q. But that you would see them, and if he would come up the next day you would give him an answer?

A. Not at all; it would be very foreign to our method of doing business.

Q. Is that the reason why you say you didn't say so, because it is foreign to your method of doing business?

A. I don't remember making any such statement; I think it is very unlikely.

I don't recollect his coming back the next day; he came several times—four, five, or six times. I am not able to locate Mr. Hoag as present at any of those interviews.

Q. Didn't Mr. Marsh make this proposition to you: to put the gear on on the following conditions: First, at his own expense; second, not to mutilate the engine; third, not to delay its preparation for the fair?

83 A. No, sir; no such proposition was made by any one; neither one of the three.

Q. Then, of course, you didn't express yourself as willing or say that your folks wouldn't consent to it. Do you remember anything of that kind—that you were willing, but you didn't think your folks would consent?

A. Nothing of that kind occurred.

Q. Didn't you state to him you would like to see the device tried yourself?

A. I may have given him some encouragement of that kind.

Q. And that you would have a talk; that you would use your influence with them to accommodate him?

A. No, sir; I didn't use my influence. I do the think- that is to be done; that is the case substantially with all my doings for the complainant.

Q. You didn't consult with the others then?

A. No.

Q. You are the company?

A. I am nine-tenths of it now and have been for a good many years.

Q. You don't have any such formality as directors' meetings, then?

A. Very rarely.

Q. Didn't you want to know on that occasion about how high a figure they would charge you for the use of it, and did not Mr. Marsh reply that he wouldn't charge you any more than they were able to pay?

A. Nothing of that kind occurred at all.

84 Q. Whether or not you told him that you would let him know if they did use it they were able to pay for it; anything of that kind?

A. No.

I don't recollect whether it was on Monday that Marsh finally obtained permission to place the device on the engine.

Q. Wasn't the contract this: That he was to put it on practically at his own expense; not to injure the engine; not to delay its preparation for the fair; and he was to take off and replace the old gear at his own expense, and that for convenience he might come to your shop and do the work—that is, make the patterns and apply the device and use such tools as he might wish to use that were not in use at the time?

A. No; nothing like that at all; it would be a physical impossibility. He would be obliged to delay the engine for the necessary time to put this on, anyway. It would be impossible to take off the old device and put on a different device without in some degree mutilating the engine and boiler. Mutilating would be an injury. Then Marsh's expense would be involved in doing the work or paying for it. He certainly did not do the work himself nor didn't pay anybody else for doing. There was no such arrangement.

Q. You say this couldn't have been made because it was a physical impossibility?

A. I make my basis upon that.

It was not a physical impossibility for him to do the work at his own expense. It was to do it without delaying the engine or mutilating it.

Q. Did it delay the engine from going to the fair?

85 A. No; we got it out to the fair; painted it nights and Sundays to do it. After the device was put on it was probably five or six days before it went to the fair. It would be a physical impossibility for Marsh to have done all this. It required the work of all the men that could possibly work on it. Perhaps you can word it so as to make it seem that he might get it around, but I know

no such arrangement was made or entered into or talked of so far as I was concerned.

The shops were nearly shut down at that time and a good deal of the machinery idle. There was nothing said in this bargain about our paying him for his time and expenses. His proposition was that he would charge nothing for his services. We were to furnish everything else. Nothing was said then about his going to the fair nor about our paying him to go. This was suggested after the device was applied on the engine and had been made successful. He came with a proposition to go to the fair.

Q. Won't you repeat just what he said with reference to going to the fair?

A. I will in substance.

Q. I want it, as near as you can tell, what this conversation was.

A. Yes; he said he wanted to go with that engine to the fairs; that it would afford him a most excellent opportunity to exhibit this valve gear to other makers and to engine men, and it would give him a chance to sell it or get it introduced—bring it to the notice of other engine-makers; then, further, as a further argument, he said: "Now, if you will let me go with this I can exhibit it better than anybody else. I know more about it. I can explain
86 it—explain its principles. I can show it up in better shape than any man you can send, and it will help you and it will help me." This is the substance of it.

Q. How long after the engine or device had been made successful before you determined to send that device with the engine to the fair?

A. Why, we determined to send this particular engine to the fair a long time before. We were obliged to send it with either one or both of these devices. I sent it really with both.

Q. At the time that device was put on or being put on there was no certainty that you would send that device to the fair, was there?

A. Not absolutely; no.

Q. How long after it was applied before you determined to send it to the fair?

A. As soon as we saw it was going to work why I felt anxious to have it go to the fair. I wanted to exhibit it just as much as Mr. Marsh did.

Q. At that time you hadn't determined to build engines with that device, then?

A. Why, I had determined in my own mind if this device was a success that we would exhibit the engine with it on, of course.

Q. Who had charge of the party that went to the fair with it? Who was your authorized agent?

A. Mr. Ellsworth was the real man who had charge of all territory. Mr. Bradley was the machinist and engine man.

Q. Didn't you instruct him before he went away with that engine that that was a special reverse gear you proposed to use afterwards?

A. I didn't instruct him at all, that I remember. He was there; he could see it for himself.

87 Q. Did you send it there as a specimen of a reverse gear you proposed to use on engines?

A. We sent it as a specimen of our latest improved engine; that was what it was being exhibited for; that was its purpose to be sent to the fair in that shape.

Q. You say you sent another device. Did you take the old one to replace this in case it failed?

A. This was put on in such a crude shape; Mr. Marsh labored under a great many difficulties; the thing was new to him; it was new to us; we were anxious about its permanent work; we didn't want to get a break-down on the field, so we put the other device in the car and shipped it along.

Q. Why did you send this to the fair as a specimen of your latest improved engine when you had not determined—and did not determine until after it came back—whether you would use the engine with that device at all or not?

A. We had determined, if this stood the test of durability—we had determined it was going to be used for the reversing device.

Q. Who do you mean by "we?"

A. I mean, practically, myself, Mr. Hoag, Mr. Thomson, and our general engine experts; it seemed to be received with a good deal of favor by our engine men; and, personally, I rather fell in love with it.

Q. About how long before it went to the fair before—when did Marsh apply to go?

A. I think it was very soon after it had gone into the paint shop to be painted; it seems to me it must have been either that day or the next day; he didn't wait.

88 Q. What other machinery did you send with the engine?

A. One separator only.

Q. Mr. Ellsworth was your general agent, wasn't he, for that purpose—that is, to attend to outsiders?

A. No; Mr. Ellsworth was one of our traveling men; we had sixteen or seventeen.

Q. One of your traveling salesmen?

A. Yes, sir.

Q. What was Mr. Bradley doing?

A. Mr. Bradley was more of an expert in the operation of an engine perhaps, and he is also a traveling man; on the road a good deal of the time.

Q. A traveling salesman?

A. Yes, sir.

Q. Are they both in your employ now?

A. Yes, sir.

Q. Have they been continuously from that time until the present?

A. Yes, sir; and for a long time before.

Q. And they are now under your direction, are they not, for what business you tell them?

A. They are in our employ; yes.

Q. You have control over their movements in traveling, &c.?

A. We have the general charge of their movements; direct them where to go.

Q. Their testimony was taken in Detroit a short time ago, was it not?

A. I understand it was.

Q. They were sent there for that purpose by you?

A. Yes, sir.

Q. They were then in the employ of Nichols, Shephard & Co.?

89 A. Yes.

Q. They were then about leaving the State, under the direction of Nichols, Shephard & Co., were they not?

A. We had them back from where they were.

(Last question repeated.)

A. Yes, sir.

Q. You mentioned, in connection with Marsh going to the fair, some expenses. Did you see the fifty dollars paid to him?

A. Yes, sir. The fifty dollars, I think, was paid to him at the time I gave the direction; my recollection is it was paid to him at that time.

Q. Did you see any more money paid to him than that?

A. No.

Q. I understand you this is a book in which all the cash entries are made?

A. Yes, sir.

Q. Of payments?

A. Yes, sir.

Q. Entries are made by different parties?

A. Yes.

Q. They are in different handwriting. You say this item that appears at the top of page 217 is in Mr.——

A. Mr. Roberts' handwriting.

Q. Would there be in your system of book-keeping any further entries of those items?

A. They would be copied from that into the general cash book, and from that posted into the ledger.

Q. You have also a labor-record book?

A. Yes, sir.

90 Q. All the labor, time, &c., goes into that, does it not?

A. Yes; the regular labor goes into that.

Q. Where is your ledger and labor record?

A. It is at Battle Creek.

Q. Will you produce it here before you finish?

WITNESS: The labor record?

COUNSEL: Corresponding with this date.

A. I am not certain but that is still in Washington. It was used on the interference case. I am not sure whether it has been returned or not.

Q. Wasn't that used on the interference case?

A. Yes.

Q. If the other has been returned—or hasn't the others?

A. I sent for this book, and had it returned.

Q. Why didn't you send for the others?

A. I didn't think I should need the others.

Q. Do you know anything about the entries in the other books?

A. No; I do not.

Q. If the entries are correctly made that item would appear in the other books?

WITNESS: Which other books?

COUNSEL: The item of labor.

A. Certainly not. In the labor record?

COUNSEL: Yes, sir.

WITNESS: Certainly not.

Q. Wouldn't it appear in Marsh's account in the ledger?

A. Not at all. It was charged to expense account. Marsh's labor record would show the number of days he worked at the fac-
91 tory; expense account with expense on the road. Marsh's labor was charged to expense account.

Q. You were sworn in the case of James Scott against Marsh and La Fever, at Chicago?

A. Yes.

Q. Didn't you testify in that case you paid Marsh about $100?

A. Quite likely. From recollection I thought it was about $100. I see it is $86.50.

Q. Didn't you swear that the books would show that you paid $100?

A. I said it was about $100.

Q. Were you not asked this question: "Do your books show that?" And did you not answer "Yes, sir;" and a natural inference, "I must have given the order"? Then were you not asked this question: "Will you swear that your books do show it?" Answer. "Yes, sir."

A. Quite likely. I knew we had a record of it. I also swore with reference to the conversation that occurred at my house, when Mr. Scott was present, and also with reference to this contract made with Marsh for the use of this invention.

Q. Did you testify that the stop plates on the engine in Marsh's device were for the arm to strike against?

A. Yes. I think the stop plate had two stops, one fixed and the other adjustable, a set-screw at one end only. I am not sure as to that; I think but one. A patent was applied for on that matter by Mr. Hoag and granted—that is, the stop plate.

Q. What direction did you give Mr. Hoag to apply for that patent?

92 A. I gave no direction whatever.

Q. What direction did you give him as to devising this stop plate, if any?

A. The engine upon which Mr. Marsh had placed this device seemed to fail to give good results in consequence of some difficulty with the reversing device, and Mr. Hoag, it seems, discovered what was the trouble with it, and, as I understand it, he went to Mr.

Shepard and told him that he could put a thing on there that would stop, or proposed to do it. Mr. Shepard told him to go on and do it then. I know of no other directions that were given except that.

Q. You gave him none personally yourself?

A. I think not. I don't remember that I said anything to him about it.

Q. Then in the defect, so called, you did not give him directions to devise something to overcome it?

A. I don't think I gave any directions regarding it.

Q. Do you know whether anybody of the corporation of Nichols, Shepard & Co. did give him directions to devise something to overcome these defects?

A. I think Mr. Shepard told Hoag to go on and do that, if anybody.

I signed the answer in the original suit that was brought in the United States court originally by the defendants against Nichols, Shepard & Co., and quite likely read the answer over. I thought the statements in that answer to be true at that time.

93 Q. Did you not state in that answer that the device as Marsh had made it was of no value; that it had certain defects; that you had instructed one of your workmen to devise something to overcome those defects; that he had obtained a patent thereon, and that you, as an assignee, were using it, but not in large quantities?

Question objected to as calling for an answer from witness to state the contents of a written paper, and it is always proper where a question of that kind is asked that the written paper be produced.

The COURT: There is no doubt about that rule. The witness has a right to see the paper. Under the rule you may take the answer.

A. I am quite unable to recollect that with distinctness. It is quite an involved question.

Q. Do you recollect anything of that kind, and especially with reference to instructing the workmen to invent a device to overcome the defect?

A. I can't remember the exact language. I think there was something of that kind in the answer.

Q. Was that workman your superintendent, Mr. Hoag?

A. I think it referred to Mr. Hoag; yes, sir.

Q. And the patent that you referred to in the answer was the patent that he had obtained and was put in the interference between Nichols, Shepard & Co. and Marsh that has been referred to?

A. That is the one; yes. I have no present recollection of an interview about the 18th of September, 1880.

Q. Do you recollect that about that time Marsh asked you if you or your company wanted an interest in this valve gear, and
94 your refusing, stating that you only was sending it to the fair because it was a novelty?

A. No such interview or remark was made by me, to my recollection.

Q. Do you say positively that it did not occur?

A. I have no idea that any such interview occurred.

Q. Are you willing to say that it did not or that you can't recollect anything of the kind?

A. I repeat that I have no recollection of any such interview. During these interviews I think I did not have any talk with reference to the company going in with Marsh and working the device together for the United States.

Q. At any time was that matter mentioned—that is, during these negotiations, up to and after the time it was placed on the engine?

A. No; I think not.

Q. In your direct examination you stated that you knew that placing this upon the engine would involve considerable expense. At that time did you have in mind the changes that were necessary to place it upon the engine, and did you make any estimate of what that expense would be?

A. Only in a general way. I could very readily see what would very likely be involved in putting on the new device.

Q. Now, what did you have in mind at that time as to these changes and the probable expense of them?

A. I have no means of knowing the exact state of my mind at that time. Of course, I knew as a mechanic and as a busi-
95 ness man that certain things would be removed, and that these new parts would be on. I could see them in my mind substantially then as now.

Q. You knew that the eccentric would have to be taken off?

A. Yes.

Q. For one thing?

A. Yes.

Q. And that the sleeve and that the wheels would be, or the sleeve, at least, would be, slipped upon the shaft in the place of an eccentric; have another sleeve on?

A. Yes; probably I would see that.

Q. In taking that eccentric off and putting on that sleeve did it necessitate any changes in the shaft itself?

A. No; I should say not.

Q. Did it necessitate any changes in the construction of the bearings of the shaft or its attachment to the boiler?

A. I think it would not interfere with the arrangement of the shaft.

Q. Now, what other changes would be required?

A. Well, it would be a substitution of the new valve rod or eccentric rod from the gear.

Q. To the valve stem?

A. Yes; the application of the quadrant and its parts were removed, and some parts of the old device.

Q. So far as the valve rod is concerned, did it involve anything more than taking away the old one and putting in a new one, or did it involve a change upon the old one?

96 A. I don't remember as to that.

Q. Couldn't that eccentric with the old valve rod be re-

placed just the same as though this device had never been on the engine?

A. I am not sure as to that, sir; at least, at that time I didn't know about it.

Q. Then you didn't have that in mind at that time?

A. I could hardly tell whether the valve rod and its parts could be removed and then replaced, or whether some reconstruction would be necessary before they could be replaced.

Q. Wasn't that talked over?

A. I think nothing was said about that.

Q. Wasn't that necessarily talked over?

A. Not at all.

Q. This device was explained to you, was it not?

A. I had already seen the device, as I have testified, in operation upon a small engine.

Q. But it required some changes to put it upon this engine, did it not?

A. Yes, sir.

Q. Wasn't these changes talked over?

A. That some changes would be made was talked over. I don't think any of the details were gone into.

A. In putting on the quadrant did that involve taking away anything that was on the engine?

A. I don't now see in my mind anything that would be removed at that particular point.

Q. That is on the rear end of the boiler; that is where the engineer stands?

A. Yes.

97 Q. The end opposite the shaft?

A. It is somewhat difficult for me to picture the engine of five years ago.

Q. Would it require any change in the engine to take off that quadrant?

A. Not in the engine, probably.

Q. How many holes were made in the boiler to put it in?

A. I don't know.

Q. Any difficulty in stopping up those holes?

A. No more than the usual difficulty of plugging holes in the boiler.

Q. Damage the boiler any?

A. Somewhat damage its sale.

Q. No particular injury, is it?

A. Well, it is none the better for having a hole and a patch or a hole and a plug.

Q. I ask if it was worse.

A. Probably worse; yes, sir; mechanically worse.

Q. Do you know how large those holes were?

A. Why, probably half an inch, five-eighths, or three-quarters; not more than that.

Q. How many of them?

A. I don't know.

Q. Would two holes, either half an inch or five-eighths of an inch in diameter, placed in that boiler where the quadrant was placed and then, afterwards, stopped in the usual manner be an injury to that boiler?

A. An injury in the sense that there is always a liability to leak where the plug is inserted in the boiler.

Q. A tap or two of the hammer would stop that, would it not?

98 A. Not always, by any means.

Q. Wasn't it a common thing to put screw plugs in a boiler for various attachments?

A. It is done when necessary, but is not regarded as a desirable thing.

Q. Didn't you attach one to the machinery to your boilers in that way?

WITNESS: What way?

COUNSEL: By putting screw plugs into the boiler.

A. Certainly.

Q. Don't you fix all your engines that way?

A. Certainly.

Q. Don't you attach your axles to your driving wheels in that way?

A. Why, the parts are bolted to the boiler in the ordinary way; nothing else to bolt to.

Q. It is not found to be detrimental, is it, to do that?

A. Why, it is found a sort of leakage; constant repair to keep plugs tight. It would be much better if we could avoid—if we could fix parts to the boiler without screw bolts.

Q. You say that these holes would injure the sale of that boiler. Do you know whether it did or not?

A. I do not.

Q. Do you know where that engine is?

A. I do not.

Q. Do you know to whom it was sold?

A. No, sir.

Q. Do you know its number?

A. I do not.

Q. Have you any record of the sales of engines by number?

99 A. We have now.

Q. Did you have then?

A. I don't remember whether we did or not.

Q. You number them all; you did then?

A. Yes.

Q. Did you have any record of this engine, by number, as to these changes? In other words, showing the number so as to show the change in this "valve gear."

A. I have no recollection about that. My impression is, however, that no record of it was made.

Q. Was there a record made of the number in sending it to the fair?

A. No; probably not.

Q. Wasn't that your custom at that time?

WITNESS: To make such record of the fair engine?

COUNSEL: That is, by numbers.

A. No; I think not.

Q. Any complaint ever made to you by the purchaser of that engine that the boiler was defective or leaked in consequence of these holes?

A. I have no record of the engine. I don't now recollect to whom it was sold or where it went.

Q. You couldn't say that any complaint had ever been made that you know of?

A. No.

Q. Was the cutting of the steam-chest considered at the time that you made this arrangement which you say you made?

A. No; I think not. It was not by me, at least.

Q. Then that didn't enter into the computation as to the changes and the expense of that?

100 A. Not in any special sense, because we did not enter into any special estimate of what it would cost. It was to be done regardless of cost.

Q. If you had not concluded to use this device afterwards it would not have been necessary to have changed the cylinder, would it?

WITNESS: To our engine?

COUNSEL: On that engine.

A. Yes. This engine was spoiled, or the cylinder part or the steam-chest part.

Q. Was the cylinder or steam-chest part so connected that one could not be used without the other especially—that is to say, the same steam-chest and the same cylinder had to go together, and no other?

A. No; not necessarily.

Q. Then the cutting out of the steam-chest didn't affect the cylinder, did it?

A. The cutting out of the steam-chest did not affect that particular cylinder.

Q. If that device was taken off and the old device restored why would it be necessary to have a new cylinder?

A. I don't think it would be necessary in that case, sir.

Q. Then the change in the cylinders was due to the adoption of that device, was it not, as a permanent valve gear?

A. It was due to the use of the device in this particular engine anyway.

Q. As a permanent valve gear?

A. We enlarged the chest—changed the cylinder pattern—after we perfected this one engine with its valve gear about which I have testified. In order to do that—to use the gear we were obliged to do that.

101 Q. What is the expense or the consideration of this agreement?

A. I don't know, sir; it is for you to determine.

Q. What work was necessary in the way of castings you folks should do in making this gear?

A. There are quite a number of parts. The sleeve was cast, the two gears were cast. I think portions of the quadrant, but am not sure.

Q. Who made the patterns for those?

A. Our pattern-maker, Mr. McKinney, made the patterns for the gears. Mr. Marsh either made or assisted in making most of the other patterns.

Q. How much time did Mr. McKinney spend in making patterns for that?

WITNESS: In making the gear patterns?

COUNSEL: In making patterns on that device.

A. I don't know that I ever asked.

Q. Can you give any approximation or estimate? State whether one day or a week, or what.

A. O, I should say perhaps not more than two or three days.

Q. What were you paying him?

A. I think at the rate of a thousand dollars a year then.

Q. Now, how much would those castings weigh?

A. Well, it is only a guess. I should say somewheres from twenty-five to fifty pounds.

Q. How much were they worth per pound finished?

A. There wasn't very much finishing on the castings themselves. The finishing part would come upon the wrought iron outside the castings—the iron pieces. I could never tell what expense was put upon that particular part of the castings alone, Mr. Parker.

Q. Isn't there a regular price for finishing castings?

102 A. We have none. The castings were worth 6 or 8 cents a pound without finishing. I don't know how much time it took to turn and bore them.

Q. Who did the forging?

A. Some of our men; I don't know who. We were running one or two portable forges. I never made any special inquiry, and never inquired as to the time.

Q. Didn't Marsh do about all the work there was in the matter?

A. I should think not.

Q. Do you know whether he did or not?

A. I should say that he could hardly have done the molding and casting; certainly not the boring, and surely no forging. I think he took off the old device and placed this one on the engine with assistance of such of our men as he called upon.

Q. Do you know who helped him?

A. Everybody and anybody who were asked. I was sworn as a witness in the interference case, and testified that I saw Hoag, Nelson, and Bradley at work over that engine. I did.

Q. Were you not asked this question, and did you not answer as

follows: "Direct question five. How did you obtain a knowledge of it and under what circumstances? Answer. To begin at the beginning, Mr. Elon A. Marsh called on me at my office, at the works of Nichols, Shepard & Co., in this city, some time in the early spring of 1880. He showed me at that time a drawing of a device that he claimed would operate nicely as a valve gear and also could be made to reverse an engine. I examined the drawings with some interest, but not being familiar with
103 that method or principle of reverse action, as applied to a valve, I gave no decided opinion upon it, but expressed a friendly interest in the subject, and after a friendly talk Mr. Marsh went away. Not long afterwards Mr. Marsh called on me again; showed me a little model of the valve gear and reversing device, and this time I examined it more intelligently and attentively than before. Mr. Marsh explained the principle by which the reverse was accomplished and shortly afterwards left me, after we had had a pleasant interview, in which I had expressed a friendly, personal feeling towards him and a hope and a desire that the device would do all he claimed or expected. Some time in August Mr. Marsh called upon me again and wanted me to in some way take hold of the invention or device with him, and especially desired that I would permit him to put one of these valve gears and reversing devices on one of Nichols, Shepard & Company's engines that — might show its practical value. After some talk, in which I expressed a desire to favor him as far as possible, I agreed that he might come to the factory of Nichols, Shepard & Company and make the patterns and do such other work connected with the getting up of this device as he could without charge to us for labor or services during that time, and that we would make the castings—I mean by "we" Nichols, Shepard & Company—and do the fitting, boring, and turning, and furnish the material; also would furnish an engine on which the device could be placed. Mr. Marsh expressed great satisfaction for this privilege and along in the latter days of August he came to the factory and proceeded to do the work assigned him. After
104 working about a week the device was made and placed on one of our traction engines. I mean, of course, one of Nichols, Shepard & Company's traction engines. This engine was fixed up and was worked with all that day—that is, the day on which it was first fixed up after this device was thus placed upon it.

"I felt a deep interest in the matter of the operation of this engine inasmuch as I had authorized the application of the device, and our company had, of course, expended considerable money and had been to some expense and trouble in the matter, and therefore I watched its operations carefully during that day on which it was first tested. I visited it very frequently during the day and I was disappointed to see that the device utterly failed to work, or, rather, that the engine with this device as thus applied utterly failed to work as a traction engine. Mr. Marsh expressed his disappointment and surprise at the failure equally as much, I think, and more than I did. He worked at it and with it faithfully during the entire day, but still the engine utterly refused to propel itself. Toward the close of the day Mr.

Marsh told me that he had made up his mind that the difficulty lay in the fact that the reach rod, extending from the swinging frame to the quadrant lever, was insufficient and not sufficiently rigid. He proposed, he said, to substitute a stronger and more rigid reach rod for the one then in use, and he felt confident that would remedy the difficulty. I saw the engine the next morning after Mr. Marsh had substituted the second reach rod before referred to. The engine was fired up and the traction gears applied or put in mesh or gear, and the engine still refused to work at all as a traction engine or to propel itself.

105 "I visited the engine several times during the forenoon of that day. Mr. Marsh was laboring with it, apparently doing everything he could to remedy the difficulty, but without any success whatever; and he expressed himself to me as very much discouraged and very much surprised over the results or rather lack of results achieved. I called his attention to the fact that this engine was the only traction engine that we had at that time disengaged or in shape to send to the Springfield and St. Louis fairs, and that it was important that it be made to work, if possible, as the time was short in which to fit it up and paint it in a suitable manner for fair purposes. He kept at work tinkering and working with the engine until nearly noon, and when I left it about eleven o'clock in the forenoon it seemed to be a total failure, and Mr. Marsh seemed and expressed himself to me as thoroughly discouraged with its operation. I saw the engine again in the afternoon of that day, and I saw Mr. Hoag, Mr. Nelson, and Bradley working over it, but I did not pay any particular attention to what they were doing. The next day my attention was called to it again by some one coming into the office and calling me to come and see that engine. The engine then stood in front of the main building of the works, having been moved from its former position (which was in the rear of the main building). The engine was at this time steamed up and several parties were gathered about it. Mr. Hoag was there and Mr. Marsh was also there. Mr. Hoag called my particular attention to the fact that the engine would now propel itself on the road, and, upon my inquiry as to what had been done to it to bring about this re-

106 sult, called my attention to a device which he had placed upon it. He pointed it out and I stood with him—beside him—while he did so and saw what it was. He spoke of it as a thing which he had put upon this engine the preceding afternoon. Mr. Marsh stood by while Hoag was explaining to me the device which he, Hoag, had placed on the boiler or engine. The engine was started up and propelled itself around the building towards the paint shop. This particular device to which Hoag called my attention consisted of a bar of wrought iron, bent into a peculiar shape, with a set-screw at one end, upon which the swinging arm carrying the valve gear rested when the said swinging arm was in its lowest or extreme downward position. The other end of this wrought-iron bar was so placed that the projecting arm of the sleeve to which the reach rod was attached came in contact and rested against this end

of the wrought-iron bar when the swinging arm was in its extreme upward position."

Q. Did you so testify?

A. I think so; yes, sir.

Q. Did you not testify further in answer to question six: "What was done with this engine? Answer. It was sent to the Springfield and St. Louis fairs."

A. I did.

Q. Did you not further testify in answer to question seven: "About what time, if ever, was it returned to this city? Answer. I think about the middle of October."

A. I think so.

Q. Now, was that not the first time that you called Mr. Marsh's attention to the fact that this was the only engine disengaged,
107 and that you wanted to send it to these two fairs?

A. I think Mr. Marsh was informed before we proceeded to do anything with this that we had this one engine, and that it was intended to be used as a fair engine. I have no particular recollection about it, but I think he was aware that this was the only engine we had at that time—only traction engine.

Q. In that answer to that question five did you not undertake to state what the agreement was between you and Marsh?

A. O, no; I was speaking only as to the invention made by Hoag in controversy between Hoag and Marsh at that time.

Q. This testimony was taken on the 21st of April, 1882?

A. Quite likely at that time.

Q. In direct question twenty in that testimony, which was as follows, did you not testify as hereinafter stated: "Question. You state in your first answer that you are secretary and treasurer of Nichols, Shepard & Company. Have you any other position, and have you in the last four years been otherwise engaged? Answer. My chief interest and position at present is that of secretary and treasurer of Nichols, Shepard & Company. I am also one of the directors. I am engaged in various other enterprises outside of this." Did you so testify?

A. I believe so.

Q. And did you not testify on cross-examination as follows: "Question twenty-eight. As superintendent of Nichols, Shepard & Company's shops and entire business in the capacity of sec-
108 retary and treasurer, etc., could you not find out in a very short time if you wanted to do so?"—that is, with reference to the sending of this engine. Did you not answer, "I don't know whether I could or not?"

A. Really I can't recollect that.

Q. Didn't you testify in answer to cross-question twenty-nine: "Your position as secretary and treasurer of that corporation makes you the executive head thereof or business manager, does it not? Answer. No, sir; the president and vice-president both outrank the secretary and treasurer as the executive head, and you are also mistaken in designating me as superintendent of these works." Did you not so testify?

A. Yes; I remember that, sir.

Q. And in answer to question thirty did you not testify again: "I have simply asked you a question, and your answer is not, it seems to me, pertinent. I have not inquired about the rank of any officer of your house; simply ask you whether or not you are the acting business manager of that institution, and therefore have the supervision or act as the superintendent of that institution. That is what I mean. Answer. I have perhaps as much or more to do with the actual management than any of its other officers, perhaps because they are a little lazy or shirk their duties, and I am benevolent enough to let them do it, at no little personal inconvenience to myself." Did you not so testify?

A. Yes.

Q. Do you recollect some time in the early part of November, 1880, appointing an interview with Mr. Marsh, and telling
109 him in that interview that if he did not come to terms with you, to satisfy you, you would fortify the invention with some patents that you knew of and use it without his consent?

A. No, sir; I made no such statements to Mr. Marsh either then or at any other time.

Q. Did you not hear Mr. Marsh testify so in the interference case?

A. I don't recollect it.

Q. Were you not present at the taking of this testimony or most of the time, and did you not hear him testify as follows: "Question 46. Did Mr. Edwin C. Nichols ever propose to you to go in with you and procure a patent on this invention and work it together or not? Answer. Mr. Nichols did make a proposal to me, which I understood to mean substantially what the question implies, and that if I did not decide to do so, if we could not otherwise agree on terms, he would bury Mr. Marsh or the Marsh invention in sackcloth and ashes, or words to that effect," etc.

By Mr. BURTON: I object to it as incompetent and immaterial.

A. I don't recollect about that.

Q. Did you not give your testimony denying that statement?

A. I can't call to mind about it at all, sir.

Q. Do you recollect meeting Mr. La Fever some time in the early part of November at Mr. Merritt's shop, at Battle Creek, with reference to this matter?

A. I remember going to the shop—Merritt's shop—and speaking to Mr. La Fever upon one occasion.

110 Q. Did you not then and there ask him what they proposed to do with reference to letting Nichols, Shepard & Company use the invention?

A. No, sir.

Q. Stating to him that you had now concluded to go on and use it?

A. No, sir.

Q. Did you not then state to him that you would use it, whether they obtained a patent or not, if you wanted it?

A. I don't remember making any such statement as that.

Q. Do you say you did not make such a statement?

A. I see no occasion for making the statement, therefore I think I didn't make it.

Q. Who served that notice upon you with reference to the infringement in the early part of February—Exhibit No. "7?"

A. My recollection is that Mr. Marsh brought it in person.

Q. What reply did you make to Mr. Marsh when he served it on you?

A. He brought, I believe, at the same time a form of license, and I made the reply to him that I didn't think we wanted to sign any such license.

Q. Had you learned before that that they intended to claim a royalty for the use of that device?

A. No; I had not heard anything decisive, I think, of that kind.

Q. Had you had any conversation with them previous to that time with reference to the use of this device, and whether or not they intended to claim a royalty for the use of it if you did use it?

111 A. No; I think not; I think this was the beginning of hostilities.

Q. Have you stated all the conversation that took place between you and Mr. Marsh. at the time of the service of this notice?

A. It was quite brief. It seems to me I have stated in substance what then occurred.

Q. Was any one present?

A. No one but Mr. Marsh and myself.

Q. Are you positive that he brought with him at that time this copy of the license?

A. I think so, as a matter of recollection.

Q. To refresh your recollection, after the service of this notice did you not meet Mr. Marsh and ask him to bring to your house a license and you might make terms with him in regard to using——

A. No, sir.

Q. And did he not bring this license to your house with Mr. La Fever, and when you were shown it and you looked it over did you not ask him if other manufacturers had signed such a license as that, and did they not reply, "Yes," and did you not reply then, "I'll be damned if I will?"

A. I haven't any recollection of that. I think the license was brought to me at the office of Nichols, Shepard & Company; that is my present memory of it.

Q. Why didn't you return it to them?

A. I think he left it there.

Q. Did you not claim, in that interview and conversation, that Marsh had stolen the whole device—that it was not his invention at all, but belonged to the public?

112 A. I don't remember of making that claim at that time.

Q. Did you ever make that claim to him or to any one in his behalf?

A. You are aware that the defense against the patent was that it has been anticipated?

Q. Please answer the question.

A. I am answering it. I think the only claim we have made against the invention has been a public claim, in our defense, as to the patent.

Q. Did you not make the claim on this occasion when this license was brought to you?

A. I think not.

Q. At the time you saw him?

A. I say I think not.

Q. You are not positive, then?

A. I can't remember the details of the conversation; I have tried to give you the substance of it.

Q. Didn't you obtain an opinion of a man by the name of Forbes, in Washington, which was to the effect that it had been anticipated by other patents, and therefore Marsh had really made no invention, and didn't you so state and show that opinion to both Marsh and La Fever?

A. The opinion to which you refer was received long after the date of these papers, so that it couldn't possibly have applied to the time your question refers to. We did receive an opinion from Mr. Forbes, but it was a long time after February.

Q. And didn't you always claim, in all of these conversations, from the very beginning, that Marsh had made no invention, that he could obtain no valid patent?

113 A. No such claim as that was talked about previous to the issuing of this patent to Mr. Marsh, to my knowledge.

Q. Was it not afterwards?

A. Afterwards the question of the invention was discussed in various ways, both in answer to your bill and in the testimony which was taken.

Q. Did not Nichols, Shepard & Company use this device because they claimed it to be public property and not because of any agreement they had made with Mr. Marsh?

A. Nichols, Shepard & Company began to use the device before any controversy had arisen over the patent—before the patent was ever granted. They did it on the distinct and specific understanding that they had the right to do it from Mr. Marsh.

Q. You based it upon that, did you?

A. Certainly. We based it upon that at the time.

Q. How long did you continue to use it on that understanding—on that basis?

A. We never discontinued its use as yet.

Q. Then at the time you filed your answer in the circuit court of the United States for the eastern district of Michigan you were still using it by virtue of this contract that you had made with Marsh, were you?

A. We used the device.

Q. Please answer my question.

A. We used the device. We used it because we thought we had a right to use it.

Q. Why did you have the right to use it?

A. Well, I have stated we thought we had the right because we bought and paid for it originally.

114 Q. Was that the reason you were using it then?

A. We were using it because we thought it a desirable device to put upon our engines was the mechanical reason.

Q. I am asking you about the legal reason—the foundation of your right—whether you were using it because you thought it was public property and that Marsh had no right to it exclusively or whether you were using it as a licensee or under an agreement with Mr. Marsh.

A. Well, probably we were using—our theory in the matter was that first we had the right to use it, both a moral and a legal right to use it, and as to the question of its being public property that was a matter of proof. We had our own personal opinion about that, about the real validity of the invention; of course, we could only form an opinion about it in the state of the art.

Q. Mr. Marsh claimed he had made this invention, did he not?

A. Yes.

Q. He claimed that he had applied for a patent?

A. Yes.

Q. And because of those claims and what you did in the matter you supposed you obtained a right from him to use it, did you not?

A. Well, I supposed we obtained a right to use it because we had performed the part that we had agreed to perform in the introduction and development of it, and that in consideration of that we had and were to have the right to use it.

Q. Was that under a claim by him of the exclusive right in the invention? Was it not?

115 A. I don't know that that particular thing had ever been talked up.

Q. Wasn't it talked up when he said he had made the invention and applied for a patent?

A. Not talked up. Incidentally he said he had applied for a patent. I wasn't especially interested in that branch of it primarily. He wanted me to adopt it, use it, and develop it.

Q. Do you still believe it is public property?

Complainant's counsel objects to witness stating his belief.

A. I am not clear upon that, sir.

Q. Did you, at the time that Nichols, Shepard & Company filed their answer in that first case in the United States court, believe then that it was public property?

A. I thought it had been very closely approximated by previous inventions.

Q. And were you not using it at that time because you believed it was public property?

A. O, no; we were using it because we believed we had the primal right to use it.

Q. Where from?

A. Mr. Marsh, if he had any invention in it. If there was any invention in it we had that, more or less.

Mr. PARKER:

Q. In paragraph 4 of your answer did you not state this: "Defendant denies that complainant in his said letters patent ever acquired any exclusive right to manufacture?" (Counsel reads the balance of paragraph 4 and paragraph 5 in said answer down to and including the words "use of the same, though not in large quantities.")

116 WITNESS: I don't recollect the exact language of the answer; I think there was something of the kind in it.

Q. At that time was it true that Nichols, Shepard & Co. were using this because they believed it to be public property?

A. From my idea of it, Nichols, Shepard & Co. were using it because they believed they had the right to use it, and the question of its being public property doubtless influenced them somewhat in the matter. I know I thought at the time "Farrabee's" and one or two other devices — the inception of it. Of course, that is a mere matter of opinion.

Q. Didn't you claim all the time that fall of '80 and the spring of '81, up to the time of bringing this suit and filing this answer in the U. S. court, that it was public property and you could use it in any way in all conversations with these defendants?

A. I don't think we had any conversations with these defendants in the spring of '80. The patent had not then been issued. There was no controversy about it.

Q. When did you first claim, in the hearing of any of these defendants after this suit, that Marsh had given you a license to use it?

WITNESS: After what suit?

COUNSEL: The beginning of the first one.

WITNESS: You said after that suit.

Q. When did you first claim, after that, that Marsh was to give you a license?

WITNESS: Do you mean after the decision of the first Detroit case?

COUNSEL: After the beginning of the suit, I said.

117 A. Well, my first statement of that agreement with Marsh and our company was to Mr. Burton immediately upon my receiving the——

By Mr. PARKER: I object to that. I didn't ask for that.

WITNESS: What is your question?

COUNSEL: My question was — to these defendants.

A. I first spoke of the agreement with Mr. Marsh at the time we had this talk about the license; then during the pendency of this interference case I think it was frequently referred to.

Q. You had a meeting with the defendants, Marsh, La Fever, and Scott, in Converse's office just before or about the time of the beginning of that first suit, did you not—that you testified about?

A. No; that was after the suit had been brought. It was in the spring of 1882 I testified to——

Q. Did you not have interviews with them before that?

A. I don't recollect any interviews with these three defendants before that especially.

Q. Had you not seen Mr. Scott before that time?

WITNESS: What do you mean by seeing Mr. Scott?

COUNSEL: Had an interview with him; talk with him about this matter.

A. Well, I can't remember as to that; quite likely; still I don't know.

Q. You had had interviews with Mr. Scott previous to this interview that you testified about that took place at your house with him and Marsh, in which you say Marsh made this admission, had you not?

A. Why, I don't now recall any special interviews with Mr. Scott previous to that; I am quite certain I had none.

118 Q. Did you in Mr. Scott's presence at any time before that interview in September, 1883, ever claim that Mr. Marsh had given your folks—that is, Nichols, Shepard & Company—a license for the use of this invention?

A. All the way through the litigation concerning this interference case that was spoken of.

Q. Please answer the question. (Last question repeated.)

A. I think it was referred to frequently during the year or year and a half preceding that interview to which you refer.

Q. In Mr. Scott's presence?

A. I think so, in a general way.

Q. Can you specify any time?

A. I don't now seem to be able to particularize any special time.

Q. When did you first learn that Mr. Scott became interested in this invention?

A. Well, probably soon after he bought his interest. I think I knew of it—in the spring of 1881, was it not?

Q. Before the beginning of the case?

A. I think so.

Q. Before April, was it not, or before about the first of April?

A. I have no means of locating the date.

Q. You spoke about receiving this notice. Did not Mr. Roberts hand you a notice—your book-keeper—the notice Exhibit "7?" Didn't Mr. Roberts hand you that notice?

A. I don't recollect that he did. It seems to me Mr. Marsh handed it to me. There is nothing about the paper to refresh my memory on it.

119 Q. Did not Mr. Converse call on you in behalf of Marsh and La Fever with reference to this matter some time in April, 1881?

A. I remember having an interview with Mr. Converse.

Q. Having that in May and calling at his office with reference to the same matter about the 12th of May, 1881?

A. Quite likely. I don't, however, recollect any special visit I made to Mr. Converse at that time.

Q. In the first interview, the latter part of April—or do you remember one about the latter part of April—say April 26th, at your office?

WITNESS: At my office, you say? I don't recollect it.

Q. Did he not then state to you that the object of his interview was to ascertain what Nichols, Shepard & Company intended to do in regard to the matter of difference between them—Marsh, La Fever & Co.—relative to this valve gear; and, in response, did you not state to him that you didn't know as they would do anything about it; that Marsh had stolen the whole thing and had no claim on the device? Do you recollect that?

A. I don't recollect using that language.

Q. Do you recollect using it in substance?

A. I can't say that I even do that.

Q. Do you deny using it?

A. I recollect we talked about the matter somewhat freely, and I gave what I thought to be a pretty fair opinion of the absolute merits of the case at that time from our standpoint, but I don't remember the language of it.

120 Q. Wasn't it your standpoint at that time that Marsh had stolen the whole device and wasn't entitled to——

A. O, no! That was a question to be determined by proof. We had our opinion about the thing, of course.

Q. Didn't you claim that to him?

WITNESS: To whom?

COUNSEL: To Mr. Converse, as their agent.

A. I don't remember about it, sir.

Q. Do you deny that you did?

A. I simply say I don't remember any such remark as that.

Q. Did you not state further, in that interview, that you wouldn't pay a damn'd cent for it?

A. Quite likely.

Q. That you had done a good deal for Mr. Marsh; had sent him away to St. Louis to exhibit the device, and had been to the expense of making it for Marsh. Do you remember stating that?

A. Quite likely we did; yes, sir.

Q. And more likely that you said that than the other?

A. Yes; because that is merely a statement of fact; the other would be a question of opinion.

Q. And paid Marsh's expenses while he was exhibiting the device; paid him about a hundred dollars. Did you state that?

A. Yes; very likely.

Q. That there had been an understanding that they—Nichols, Shephard & Company and Marsh—were to handle the device together, but that Marsh had gotten the big head and no one could do anything with him. Do you remember stating that?

121 A. I remember having a conversation with Mr. Converse about it. I think that is hardly the exact language that I used regarding that point.

Q. At that time did you make any claim that they had a shop-right license from Marsh to Mr. Converse?

A. Yes, sir; I haven't a doubt but I did.

Q. Do you remember making it?

A. I only remember the conversation in general. I have no doubt of it. I had that interview with Mr. Converse. I can't recall the language of the interview.

Q. Did you not exhibit to Mr. Converse at that time several drawings of patents, and explained their relative merits?

A. Quite likely.

Q. Did you not contend that Mr. Marsh's device was not new, but that it was old; that Marsh had stolen it?

WITNESS: What do you mean by contend? Who was I contending against?

COUNSEL: Contending against the defendants or their agent.

WITNESS: You are talking about an interview with Mr. Converse. Do you mean I contended with him?

COUNSEL: With him.

WITNESS: That is, disputed with him?

COUNSEL: That you are claiming.

WITNESS: What claim is it?

COUNSEL: That the device was old.

A. I don't remember as to that, sir.

Q. Do you remember showing him a drawing of the other patents?

122 A. I do not. I don't remember it. I have no doubt, if he says I did, that I did.

Q. Did you claim that you could burst up Marsh's patent?

A. I don't remember that I said anything about that.

Q. That you would do so. Do you remember that?

A. I quite likely said if they kept on they might find some difficulties in the way. I don't remember as to——

Q. Do you recollect mentioning about that time about this having been used in 1865 on an engine used at a railroad station, and that you could produce a man that would swear to it?

A. I know we had such testimony at that time. I may have told Mr. Converse; quite likely I did.

Q. Do you remember at that time examining into the matter and getting testimony—looking up some testimony?

A. This testimony to which you now refer came to the factory only a short time before that. We were not looking up.

Q. Had you looked up the patent—what might be termed the anticipatory patents—before that?

A. Not very largely at that time.

Q. Do you remember claiming Marsh had used you shamefully in that interview?

A. It is very likely I expressed an opinion like that; yes.

Q. That you would make him walk in sack cloth and ashes for his conduct. Do you deny saying that?

A. I hardly said it, perhaps, just the way you repeat it.

123 Q. Did you not aiso claim that Marsh, La Fever and Company would never get a cent out of the device?

A. I may have expressed that opinion.

Q. And that you—that is, Nichols, Shepard & Company—would pool with other manufacturers and fight them to the end?

A. Well, I recollect about that part, and that I had a talk with Mr. Converse, in which I called his attention to the fact that it was very customary for manufacturers to oppose patents together—that is, pooling against them as railroads do. I think that was the inference that I drew.

Q. You say you think you may have told him?

A. I may have told him what I just now said.

Q. Did you not state to him on that occasion that you would give the parties having taken out licenses a written guarantee for one dollar apiece against any damage for use or manufacture of the device?

A. I don't recollect that; I wouldn't be apt to say it; I don't recall the conversation at all, any of these little details.

Q. Do you say that did not occur, or that you did not say it?

Q. No, I do not say that; I say if the conversation was to be repeated it would be found that those injections came in in connection with other things.

Q. This wasn't the whole of the conversation?

A. Undoubtedly not.

Q. Do you remember any more of it?

A. I think it was very lengthy, sir.

Q. Do you remember calling on Mr. Converse, at his office, about the 12th of May following this?

124 WITNESS: Could you give me any point by which I can determine that particular interview?

Q. I asked you if you remembered that.

A. Not that particular time.

Q. About that time following this other interview?

A. I have no special recollection of any such interview now.

Q. Do you recollect calling on him at all?

A. I called upon him several times during the season.

Q. Do you recollect asking a private interview with him?

A. I do not; no.

Q. Do you recollect telling him on that occasion that you had received numerous letters from parties who had taken out licenses for royalty on the Marsh gear; do you recollect anything of that kind?

A. I recollect conversing about that with Mr. Converse at one time.

Q. Did you not state to him then that those letters were inquiries as to what Nichols, Shepard & Company were doing in regard to the matter; do you recollect that?

A. I don't recollect just that statement; no, sir.

Q. Anything of that kind?

A. I recollect stating, I think, to the effect that parties were writing to us about the Marsh valve gear.

Q. And further stating: And whether they had taken out license or not—that is, Nichols, Shepard & Company; do you recollect their asking you that and you stating so to him?

125 A. I think there were some inquiries received regarding

that, and I doubtless, at this interview to which you have referred, spoke to Mr. Converse about it, among other things.

Q. Did you tell him on that occasion and in that connection that you were somewhat embarrassed in the matter, and that you hardly knew what to write these parties, as you had before written them that no arrangements had yet been made? Do you recollect that?

A. No; I do not.

Q. Anything of that kind?

A. I do not; no, sir.

Q. You say it was not said?

A. I should say that no such statement as that, in the way in which you put it, could have been made by me unless it was something that referred to a settlement of the litigation; an arrangement touching that.

Q. Did you not state to Mr. Converse that the answers to those letters which you had received from other manufacturers stated that you had not made any arrangement with Marsh, La Fever and Company for the use of this device?

A. No; I don't think I could have made such a statement.

Q. Did you?

A. I don't think I did; no; not touching the use of the device.

Q. You swear positively you did not?

A. Certainly I would about touching the use of the device. If you ask touching the question of litigation there might be something in it.

126 Q. Did you state in that same connection, in fact, you had been standing off the other manufacturers, that this interview was for the purpose of getting at some sort of a settlement so that you could answer?

WITNESS: Standing it off.

COUNSEL: Yes; standing off—using that language.

A. I could have no recollection to say whether I said it or not.

Q. Did you tell him that you had to answer these letters, and wanted to know what Marsh, La Fever and Company were going to do in the matter before answering?

A. I had quite a talk with him about the matter, but I don't remember saying anything about having been standing him off; perhaps there was something of that kind said.

Q. Do you remember asking him in that same interview whether they—that is, Marsh, La Fever and Company—or what proposition they had to make, if any, and then proposed to him that Nichols, Shepard & Company were willing to give the patent their support—that is sustain it—in case Marsh, La Fever and Company would give Nichols, Shepard & Company a license; did you not make that proposition?

A. I don't remember about it, sir. I don't think I would make such a statement. I don't think I did make a statement of that——

Q. Wasn't that the substance of the conversation?

A. No; it might have been; probably the way you state it indicates that that would be a synopsis of something that might have been

said, but I would be very loth to say I used just those words, in so many words.

127 Q. Will you say whether this is a correct synopsis or not?

WITNESS: Let me hear the remark again.

COUNSEL: That you were willing—that is, Nichols, Shepard & Company were willing—to give the patent your support—that is, sustain it—in case Marsh, La Fever and Company would give you a license?

A. I don't remember making any such statement to Mr. Converse.

Q. Or a shop right or a free right to use it or anything of that kind?

A. I have no recollection of making that statement to Mr. Converse at all.

Q. Didn't you say in that same connection that you would break down the patent if they didn't do it?

WITNESS: Do you mean as a matter of threat, or something like that?

Q. I asked if you did say so.

A. No, probably not; in no such way as that.

Q. You say "probably?"

A. I mean substantially that I wouldn't make such a statement; didn't make any such a statement that I would break down the patent.

Q. Didn't you threaten in the same connection that you would pool with the other manufacturers to do it?

A. I presume not, sir.

Q. And you knew you could do it?

A. I have no doubt I knew pools were quite common. I don't think I made any statement that I would pool; we had no occasion to pool.

Q. Did you not state to him you had already sufficient

128 information by which you could break up the patent, and that you would?

A. I probably expressed an opinion upon it.

Q. But that you had no ill will against Marsh, La Fever and Company?

A. Yes.

Q. You would rather they make money out of it than not and bring it in the city?

A. That sounds very much like something I might have said.

Q. You were sworn and testified in the case between James Scott and Marsh and La Fever at Chicago, in the superior court, Cook county?

A. Yes, sir.

Q. In that testimony did you not say in answer to the question, "Did you have a conversation with Mr. Converse in about April, 1881, in regard to the matters of the patent, and so forth? Answer. Yes, sir." Did you not say so?

A. I think so.

Q. And "Question. Did you state to Mr. Converse at that time

that you would make Marsh walk in sackcloth and ashes?" and did you not answer, "I have no recollection of saying that?"

A. I think I did so testify.

Q. Were you asked, "Will you say whether you did or did not say it?" And did you not reply, "No, sir. I will not attempt to remember a conversation so long ago as that." Did you so testify?

A. I think I did.

Q. And were you not asked, "Did you say to Mr. Converse in that conversation that Marsh would never get a cent out of
129 the device, that you would pool with other manufacturers and fight them to the end, or words in substance to that effect?" To that question did you not reply, "Quite likely I did, sir?"

A. I think I so testified.

Q. And were you not asked, "Did you state to Mr. Converse in that conversation that you would see the parties that had been licensed from Marsh's decree and give them a written guarantee for a dollar apiece against any damages for the use and manufacture of Marsh's device? And did you not answer, "I have no recollection of that sir?"

A. I think I so testified.

Q. Were you not asked, "Or words in substance to that effect?" And did you not reply, "I do not remember as to that?"

A. I think so.

Q. Were you not then asked, "Will you say whether you did or did not say so?" And did you not reply, "I shall have to say I do not remember?"

A. I think I said so, sir.

Q. And were you not asked, "You might have said so and do not remember. Is that it?" And did you not answer, "I simply say I do not remember making that statement?"

A. I think so.

Q. Do you recollect showing Mr. Scott the decision that Judge Brown rendered in the original case?

A. Yes.

Q. Where was that and when?

A. He came to my office in September, 1883, I think.

130 Q. Was there anything said to Mr. Scott at that time about Marsh having given you a license to use this device, this agreement which you have testified to?

WITNESS: When he came for the decision?

COUNSEL: I said at that time when you showed it to him.

A. I don't remember as to that. His errand to me was to obtain a copy of the decision. I remember giving him that.

Q. How long ago? Was that after this meeting that you say you had with him and Marsh at your house that Marsh made this admission?

A. I think it was the next morning.

By the COURT:

Q. That is, he came after the record the next morning after the meeting?

A. Yes.

By Mr. PARKER:

Q. That is, the meeting about which you have testified with regard to Marsh's making this admission?

A. Yes.

Q. Was there anything said that night about this decision?

A. I think it was referred to.

Q. Was there anything said about that decision before Marsh came in that evening?

A. It seems to me not.

Q. What was said with reference to it?

A. I can't recall. It was referred to by me and by the other parties incidentally, and then it was talked about as being quite a sweeping decision. I don't recollect the details regarding it.

Q. Did Mr. Scott seem to understand its purport or did he not?

131 WITNESS: The purport of the decision?
COUNSEL: Yes, sir.

A. I thought not from some things which he said or seemed to indicate by his manner.

Q. Did you then tell him you had a copy of it and that if he would call he could see it?

A. No; I don't remember that I did.

Q. Anything to that effect?

A. My recollection is that he expressed some surprise about it; said he had not seen or had not read it, and asked something about it, where it could be had. It seems to me I told him I had a copy of it which he could have, or something of that kind.

Q. How long had you been talking over the controversy before you got up or before they got up to go?

A. Not very much had been said about the controversy up to—in fact, nothing up to the time, I believe, in which Mr. Marsh came in. I think Mr. Scott and I had not really referred to it, and Mr. Marsh and Mr. Scott seemed mutually embarrassed, and the interview didn't continue very long. It seems to me that they were there only half an hour or so, as I now recollect it.

Q. Have you stated all the conversation that took place on that occasion?

A. It seems to me so in substance; perhaps not. The conversation at first was somewhat general, and then drifted around upon this litigation.

Q. During that conversation did you say anything with reference to Marsh having made this contract and license?

WITNESS: Do you mean before the final?
132 COUNSEL: Before the final termination of it.

A. I don't remember that I did. I think we were talking more about the litigation in general.

Q. Do you swear that you didn't say anything about it?

A. I don't now recall, at any stage in the conversation, a reference to the agreement of license for Nichols, Shepard & Company at all. It seems to me the conversation didn't shape itself to call it forth at that time.

Q. Did they or either of them make any propositions of settlement?

A. I think Mr. Scott suggested that they would like to settle or like to have it disposed of, and in answer either to an inquiry or a suggestion of mine. I think he spoke about ten thousand dollars being about the proper sum for Nichols, Shepard and Company to pay to have the whole matter settled up.

Q. That you refused, of course?

A. Yes.

Q. Was there anything else said about a settlement during that time?

A. Why, they talked in a general way that they would like the thing settled, got out of the way; it had been an unfortunate and expensive litigation; they thought it had better be settled. Of course, I had but little to say on that point. I was receiving propositions rather than making any, as they had called upon me for that purpose.

Q. When he proposed to settle for ten thousand dollars did you tell him that you didn't think you ought to pay anything because Marsh had given you the right?

133 A. Not in that exact form, I think.

Q. Did you in any form?

A. When he spoke of ten thousand dollars I think I simply said that it was idle to talk about that.

Q. When you got up to go the conversation was practically finished, was it not?

A. I considered it so; yes.

Q. Then you made this casual remark?

A. We were really talking all the time. When they arose to go, why we were still talking about the fact that there was litigation, saying that they hoped it might be settled; ought to have been settled, &c. I said it ought not to have been begun. That brought the remark from me as I have testified to.

Q. In that remark did you mention Nichols, Shepard & Company at all?

A. I said "we," of course.

Q. Did you say "we" or did you say "me"?

A. I must have said "we."

Q. Are you positive?

A. Because I referred to the litigation that "we" had had in the matter. My remark was—if you would like me as near as I can state what my remark was I think I can give it in substance approximately. My remark was that the litigation had been forced upon us, and that it was an unjust thing; as I expressed it, I stated

it was an outrage upon us. Then I said, "Because you know, Mr. Marsh, that we did. It was the agreement that we were to have the right to use this device upon all our engines."

Q. You are sure you said "we" were to have the right or "I" was to have the right?

A. That "we" were to have the right.

134 Q. You are positive about the language of that?

A. I am positive what was in my mind. Of course, I had no personal right to be considered in the matter that I know of; the litigation had not been with me; it had been with our company.

Q. Do you think that the remark that you say you made now was the exact remark you did make on that occasion?

A. No; I wouldn't say it was the exact remark; I say it is, in substance; as near as I can recollect, the substance of it was the substance of what was said.

Q. As to what Marsh replied, do you say he replied exactly as you say he did, or is that the substance of it?

A. My nearest recollection of Marsh's reply is this: He said, "Yes; that is so, but you didn't have it in writing."

Q. You say he said that is so?

A. No; I am not attempting to give the exact words.

Q. Do you swear he said "yes"?

A. I am very positive he said yes.

Q. Do you say that he said that you didn't have it in writing?

A. I am very positive he said that.

Q. Now, Mr. Nichols, might he not have said with reference to having it in writing, "That is so; it would have been in writing"?

A. No, no; not possible to put that construction upon what he said, because I immediately followed it up by saying, "But you would have put it in writing if I had asked you;" and he replied, "Yes, but you didn't ask me."

135 Q. You say he said that?

A. I do say he said that.

Q. You are positive about that?

A. Yes.

Q. Are you positive you said that he would have put it in writing if you had asked him to?

A. I am positive about it. It was the substance—almost the exact wording, it seems to me.

Q. Are you any more positive about that than you are about the rest of it?

A. I am just as positive about it all in substance as I have testified to.

Q. Why are you any more positive about this special remark—made as you were getting up to go or as they were—when you are not positive about the language of the rest of the conversation previous to that time?

A. The conversation previous to that time had been a general conversation, not specifically directed to any one thing. They were there apparently to talk about some offer, adjustment, and settlement

of this matter. I would only be interested in the conclusion that they might reach about the terms—for instance, the specific.

Q. Had Mr. Marsh ever admitted before to you or any one else or to you in any one's presence that he ever made any such agreement?

A. I don't think he has admitted to me in any other presence that he had made that agreement.

Q. Had he to you personally?

A. Well, I testified here yesterday that when he presented the license I said to him, "You know that was not what the
136 agreement was. We were not to pay any license." His reply to me was, as I testified, "That is so, but I can't help it." I consider that an admission.

Q. Now, is the reason why this impressed itself upon your mind so much more strongly than the rest of the conversation because it was the first time he had made that admission in the presence of anybody else?

A. Well, I don't know that that would be a specific reason for remembering it. I remember it because it was significant. I suppose, Mr. Scott being a partner, &c., that it would be no great consequence either way. Still, I remember it because it was what I had always claimed. I was wanting to hear him frankly admit it, as I thought he did.

Q. Now, Mr. Nichols, you say you have always claimed?

A. Yes; always.

Q. Will you state the occasions, aside from those two that you have mentioned—that is, when he presented the notice and this interview—when you have ever claimed anything of the kind?

A. I claimed it in a conversation with Mr. Converse, referred to here. The basis of all I said to him was from the fact that I claimed distinctly the use of the invention by agreement of purchase at that time. I told Mr. Converse so at the time. I have always in conversation with everybody. In fact, so far as I know I have never said anything to the contrary or omitted to say this thing; always held that we had that right; always claimed it.

Q. Why didn't you claim it in court?

A. Well, when I went to——

Q. On the first occasion?

137 WITNESS: On the first occasion? When I went to Detroit to engage attorneys in this case—in that case—I told Mr. Burton what the agreement was with Mr. Marsh at that time. I was no lawyer. I had never been involved in any patent litigation in my life; knew nothing about patents or patent litigation; not a thing. I told Mr. Burton this, but I told him that I had no proof of it. I gave him the agreement between Marsh and myself. Mr. Marsh denied it; I affirmed it. Mr. Burton told me then and there that the preponderance of proof would be upon us, and that it would be—I think he said if we plead this we would have to rest upon that plea if we made it, after asking me what testimony I had in corroboration of it. It seemed he took the view, and I thought so also, that we were not safe in resting upon that plea. I was not able to

produce any corroborative proof at that time, or didn't know of any, but the fact that we claimed to use the device under and by virtue of that arrangement was the very first statement that I had made to the attorney in this case.

Q. But in that statement you told him Marsh denied it.

A. Certainly I said Marsh denied it; at least did not admit it.

Q. Now, when Mr. Scott came the next day to see this opinion did you talk with him in regard to this license or Marsh's admission the night before?

A. Very little, I think. I don't know, but it was that morning that I heard of it; that morning; not long afterwards.

Q. Did you before he went to Chicago?

138 A. It rather seemes to me not. I think he went to Chicago immediately. I haven't the next time. You know by the dates; I don't——

Q. Did he ask you anything about what Marsh had said that morning?

A. He asked me for the opinion. I furnished it to him. I don't remember that we had any conversation about the matter that morning at all.

Q. Did he say anything about rescinding the sale that had been made?

A. Well, whether it was at that time or a few days later I can't say, but it seems to me now that when he brought back the book—at any rate, within a few days after—possibly the very morning to which you refer—he remarked that he had been deceived in the matter, and that he was going to make an effort to get his property back.

Q. Did you encourage him in that?

A. Why, I don't know that I said much about it. I couldn't see that I had any interest in it.

Q. Do you recollect his making an affidavit in that case stating the substance of this interview at your house, which affidavit came into your possession and which was never filed in the case?

A. I had a copy, I think, of his affidavit only.

Q. Didn't you have the original, and didn't you show it to me at my office, in Detroit?

A. Well, I don't remember whether it was a copy or the original. I knew of the affidavit, and I had a copy of it after it was made.

Q. Did you not cause that affidavit or extracts from it to be published in the papers at that time?

A. Yes; I think I did.

Q. How came you by that affidavit?

139 A. I got it from Mr. Brown.

Q. Mr. Brown was Mr. Scott's attorney, was he not?

A. Yes.

Q. Was he your attorney, too?

A. No.

Q. Did you ever authorize Mr. Brown to make any offer or settlement in the Scott case which involved a settlement of that case?

A. No; not as far as we were concerned.

Q. Do you know whether he made any such offer or not?

A. I do not.

Q. Do you know who was Mr. Scott's attorney in Chicago in that case?

A. I suppose Mr. Hill was.

Q. Mr. Hill, this attorney here now.

A. Yes.

Q. Who is your solicitor here, or counsel?

A. He is counsel here; yes.

Q. Do you recollect that Marsh made some application in Congress to validate and remove the cloud from that patent?

A. I understood that he did so; yes.

Q. Did you see the bill?

A. I have a copy of the bill, which I received some time since. I didn't see the original; no, sir.

Q. Did you not oppose Mr. Marsh's efforts to obtain the passage of the bill by writing letters to members of Congress?

A. I wrote several letters on the subject.

Q. Can you say whether that is a copy of the bill?

140 (Witness examines "Exhibit No. 9.")

A. I don't know.

Q. You say you have a copy?

A. I have a copy like this; I think a printed copy.

Q. Did you not employ counsel in Washington to appear before the committees to whom the bill was referred in each house, respectively, and argue against the proposed action?

A. Yes, sir; I instructed Mr. Mahon, of Washington, to oppose the passage of the bill.

Q. How would the passage of the bill affect your rights?

A. Well, as I understand it, the first bill is retroactive; would validate the patent back to its original date; secondly, I was informed by counsel that Mr. Parker took the position that, if the patent were validated as of original date, by appealing the Detroit case to the Supreme Court the Supreme Court would adjudicate that case upon the patent as it then stood.

Q. That is, after the passage of the act?

A. If the bill were passed.

Q. If you had a license from Marsh to use this device what difference did it make to you whether the patent was validated?

A. I didn't know whether I could show the license or not, my dear sir. That made a difference with me, didn't it?

COUNSEL: Very likely.

WITNESS: I thought so.

141 Q. Did you not authorize Mr. Mahon to claim before these committees and did he not claim that Marsh had made no invention; that the thing was old?

WITNESS (addressing the court): Am I obliged, your honor, to disclose my instructions to the attorney?

By the COURT: I presume counsel will object if they wish to take advantage of their privilege.

By Mr. BURTON: Unless Mr. Nichols was present I don't suppose he can tell what his attorney did.

WITNESS: I don't know what the attorney did.

By Mr. PARKER:

Q. Did you not instruct your attorney to oppose the passage of that act on the ground that Marsh had made no invention; that the matter—the subject-matter—of the patent was old?

A. No; I gave no such instructions. I am willing to answer that.

Q. You say you don't know whether he did so oppose it or not?

A. I do not.

Q. Did you authorize and instruct him to oppose it and state as the reason of the opposal that Marsh had given your company a license?

A. I gave him no such instructions.

Q. Did you allow him to use his discretion in the matter?

A. My recollection is that I simply wrote Mr. Mahon that the bill would be against our interest to have the bill passed. I think I wrote him that there were reasons, which I have already given, namely, that the bill was retroactive, and, if validated from the beginning, it was your position that it might be adjudicated as it then stood; third, that you had filed a new bill against us, in which you set up that your patent was perfected; that you had the pat-
142 ent duly signed by the Secretary of the Interior, &c., and had brought a new suit; that while that suit was pending we thought it was not best for Congress to validate the patent which was sued upon.

Q. That was after the patent had been actually signed?

A. It was while your bill was pending.

Q. That was after the patent had been actually signed, was it not?

A. I think the dates will show that.

By Mr. PARKER: I think, if your honor please, that is all. I would like to give notice if I find anything that I wish to ask I may be allowed to do so. I think that is all.

Redirect by Mr. BURTON:

Q. Mr. Nichols, you yesterday spoke of a union of several gentlemen—Mr. Aultman, Mr. Taylor, Mr. Shepard, Mr. John Nichols, and yourself—who employed attorneys to do your work in relation to patents and patent rights. Are they all members—all those gentlemen stockholders in your corporation?

A. Yes, sir.

Q. Were at that time?

A. Yes, sir.

Q. Was there anybody in that association that was not intimately connected with you in the business—in your business as a corporation?

A. No, sir; they were all stockholders and all directors.

Q. What was the nature of the association of those gentlemen?

A. It was to protect and guard the patentee's interest under
143 which we were manufacturing our goods by the reissuing, extending, purchasing, &c., of patents connected with goods in which we were interested.

Q. I call your attention to the various conversations you had with Mr. Converse. When did you first see him or when did you first see him with reference to this matter at all, as close as you can recollect?

A. I think it was in the spring of 1881—March, April, or May; I can't remember the exact time.

Q. What interest did he have or state that he had in the question?

A. Well, he said he had been asked by Marsh or La Fever to see what Nichols, Shepard & Company wanted to do about the Marsh reverse gear.

Q. Did he come to your office or you go to his?

A. I think he came to our office. I think I also went to his afterwards.

Q. How many consultations did you have with him?

A. Several. I can't recall all the interviews, but I must have seen him three or four times.

Q. Can you now recall what happened at the first interview? What did he come there for?

A. Well, in a general way, I know the character of the interviews. They were all relating to this subject-matter of the Marsh reversing device and Nichols, Shepard & Company's use of it, on the one hand, and a sort of——

Q. It was after this notice had been served?

A. O, yes; and one litigation was supposed to have been pending.

Q. Who was threatening litigation?

A. Well, in the way of rumors. It was coming to me from various sources.

144 Q. Mr. Converse said they were going to sue you.

A. Yes; Mr. Converse told me that they would probably sue for an infringement. It was well understood that they didn't recognize our right to use the device at that time.

Q. Did you make any claim to Mr. Converse at that time of any right to use the device?

A. I told Mr. Converse in the beginning and all the way through on every proper occasion. I always held and always maintained and always said that Nichols, Shepard & Company used it because they had the right to use it—had acquired it.

Q. Will you recall, to the best of your ability, the conversation which was had at Mr. Converse's office at the time you called there in which you spoke about or in which you asked the question that you spoke about writing letters to other parties? Do you remember that conversation?

A. Yes.

Q. Was that at Mr. Converse's office?

A. I think it was.

Q. Will you state the conversation, as nearly as you can remember it?

A. In that particular regard it was on my part. I called his attention to the fact that I had received several letters from manufacturers wanting to know what was the situation of the Marsh reversing device, as far as we were concerned; and, as I now recall it, my chief anxiety about the matter was that I didn't want to do Marsh and La Fever any harm; at the same time I thought that they had treated us very shabbily. I was a little uncertain just what to do.

Q. For what reason?

145 A. Why, I didn't want to do anything that would interfere with their placing their device in the hands of other manufacturers, and at the same time I felt somewhat reluctant to furnish them any extraordinary facilities by which to litigate us.

Q. Would the reply that you might make to those letters in any way influence the granting or the taking of licenses by other parties? Could it be made to do so?

A. No doubt it would, sir.

Q. Would the fact that you should claim that you had a license or shop right for which you had paid and for which you were not to pay any further royalty—would that affect or influence other parties or be apt to influence other parties?

A. Well, I can't say as to that. I think perhaps it would, from the fact that we were using it and adopting it—would doubtless have its influence.

Q. Do you remember whether you made this statement or remarked to Mr. Converse at that time that you didn't want to reply to other manufacturers, stating the rights that you claimed, because such a statement might work injuriously to Marsh?

A. I think I did make in substance that kind of a statement.

Q. I call your attention to the interview in Mr. Merritt's shop with Mr. La Fever. Do you remember what occurred at that time? When was that?

A. It must have been long before the granting of the patent—along in November, probably. My recollection is I simply asked him how he was getting along with the application for the patent.

146 Q. You were asked this morning whether at that interview with Mr. La Fever you didn't state to him that you intended to use that invention, whether Marsh got a patent or not. You stated that you did not use such language as that, if I remember right?

A. Yes.

Q. Do you remember what was the purport of the conversation that you did use?

A. I can't recollect that there was any controversy between us at that time. They had no patent; were making no claims for one. They had an application. I can't recall the interview as having any bearing in that direction at all.

Q. Some time in November you think it was?

A. Yes.

Q. Shortly after you came here or very soon after?

A. Yes; very soon after I returned from——

Q. You had not sold any machines with the device on?

A. No.

Q. Do you know whether at this time you had really got any machines manufactured with the device on?

A. No; I do not.

Q. Do you remember how many machines you had manufactured that fall before the 28th of December—on which the device was used, I mean, of course?

A. In the natural course of business there would be—assuming that we started up the first of November—from then until the 28th of December there would be probably from five to ten.

Q. About two months' work?

147 A. The engines upon which this device would naturally be placed.

Q. Up to the 28th of December you would not have assembled a great many engines, anyway, would you?

A. No; in the course of our operations it would take us some time to get ready to do that, besides the preparation of engines upon which there was no reversing device.

Q. When you came to see me after the first bill was filed you remember handing to me that paper?

(Witness examines Exhibit No. "10.")

A. Yes, sir.

Q. It is the affidavit of Mr. Miles. How came you by that paper?

By Mr. PARKER: I object to what transpired between him and his counsel, besides what has been testified to, as he can't make evidence for himself in that way.

A. This paper was handed to me by Alfred A. Ellsworth, a clerk in my office.

Q. You had read it?

A. Yes, sir.

Q. If what the witness stated therein is true, that would furnish something of a defence to the first bill, would it not?

By Mr. PARKER: I object. It is not a matter of opinion; it — a matter of law.

By Mr. BURTON:

Q. You suppose they would?

A. Certainly I suppose so.

By Mr. PARKER: I object; it is suggesting a conclusion.

By Mr. BURTON:

148 Q. Will you state whether or not at the time you came to me you considered that you in reality had two defenses to the action that was then pending?

By Mr. PARKER: I object to it as incompetent and irrelevant and calls for an opinion.

A. I did.

By Mr. BURTON:

Q. And the defense which was actually adopted was taken, after consultation with counsel, because of counsel's advice, was it?

By Mr. PARKER: I object the same as last, and, further, that it is leading.

A. It was.

By Mr. BURTON:

Q. At the conversation with Mr. Converse, where Mr. Parker asked you if at that conversation you did not say to him that you knew where a device similar to this one had been used on a station engine, and that you had a man or a witness who would prove it, you answered—what did you answer to that?

A. I don't now recall that question.

By the COURT: He answered he presumed that he did, for such was the fact; I think was the substance of the answer.

By Mr. BURTON:

Q. If you made any such statement, what did you refer to?

A. I referred to the affidavit of Mr. Miles.

Q. This one that has just been shown you—Exhibit "10?"

A. Yes, sir.

Recross-examination by Mr. PARKER:

Q. That witness, Miles, was sworn in the first case, was he not?

A. Yes.

149 Q. His testimony was taken?

A. Yes; his testimony was taken.

Q. The manufacturers that you said you would pool with them had reference to the members of your concern, did it?

A. Yes; our patent company.

Q. The manufacturers that you said you were going to guarantee for a dollar apiece if they would manufacture were not members of your company, were they?

A. I don't remember having made any such a statement, to begin with; if any reference had ever been made such parties, of course, would not be members of our company.

Q. If you did make a statement you didn't refer to members of your company?

A. Certainly not.

Q. You say you told Mr. Converse that you had the right to use this device?

A. Yes, sir.

Q. Did you show him that affidavit just referred to of Miles'?

A. I don't know whether I did or not.

Q. Did you mention Miles' name?

A. I think very likely that this affidavit was exhibited to him; I am not sure; we talked it over in a very general way. I had it at that time, I know.

Q. What was there said about having the right?

A. In substance I said to Mr. Converse?

Q. Yes, sir.

WITNESS: Do you mean what did he say—Mr. Converse? We had furnished an experimental machine, had given Mr. Marsh all
150 the facilities, paid our money, had developed and introduced the device, and that it was upon the understanding that we had the right to use it on all our own engines. That was the agreement; that was what I was finding fault about—that he went back upon it.

Q. Then you based your claim of right upon the agreement that you testified about, did you, in that conversation?

A. Our claim of right to use the device primarily rested upon that fact; yes, sir.

Q. And nothing else?

A. That was the claim we made—that we had a right to use it in consequence of what we had done for Mr. Marsh in the introduction and bringing of it out.

Q. In that matter did you mean your paying Marsh's expenses, &c., to go to St. Louis?

A. I think I told him pretty generally what we had done. I think I explained it to him in a general way all that we had done.

Q. Was that expense in part consideration that you paid for the use of this device?

A. This time, Mr. Parker, Mr. Marsh was paid; his expenses and time were paid exhibiting this engine upon his solicitation.

Q. Didn't you claim that in consequence of what you had done for Marsh that Marsh, as a matter of gratitude, ought to give you the right?

A. O, no.

Q. Wasn't that your claim?

A. Not at all.

Q. Wasn't that what you meant when you said Marsh had treated you shabbily?

A. No, sir.

151 Q. Because he didn't recognize it?

A. No, sir.

Q. Hasn't that always been your claim with reference to this?

A. Not at all.

Q. Until lately?

A. No, sir.

Q. Didn't you say you had done a good deal for Marsh in that sale connection?

WITNESS: Do you mean before this device was applied?

Q. Didn't you say you had done a good deal for Marsh in that conversation?

A. Quite likely I did, sir.

Q. Didn't you base your claim upon what you had done for Marsh generally?

A. No, sir.

Q. Did you mention any special contract?

WITNESS: In my conversation with Mr. Marsh?

COUNSEL: Yes.

A. I have no doubt, sir; in fact I am very positive I did.

Q. You think you did?

A. Yes, sir.

Q. You were very earnest in speaking of it, too?

A. I think I said it in my usual plain, and perhaps emphatic, manner. I don't know that I went into any special——

Q. If he didn't report it to Marsh and La Fever he didn't report what you said?

A. I know nothing about his report. I know what I said in substanee.

152 Q. This interview that you had with La Fever at Merritt's shop was about the time that you had received returns or Ellsworth's report of the operation of the device in this fair business, was it not?

A. I think it must have been shortly after that.

Q. Do you know whether or not you had made any engines at the time of the interview having this device on them?

A. I think we had refitted the first one and had made new patterns and we were in process of manufacturing others, but how far we had progressed I cannot identify.

Q. Wasn't the object of that interview to notify them that you proposed to manufacture engines with that——

A. O, no; it was a mere incident my calling upon him at all.

Q. Didn't you tell him that you were going to commence making the next week?

A. Not at all, sir.

Q. You spoke of changes that were made when this engine came back. Do you know whether there was any change made in this valve gear?

A. I think we made a new sleeve entire. Instead of using cast gears we made blanks and cut them with a milling machine.

Q. Was the stop plate changed?

A. Yes.

Q. In what respect?

A. Well, the stop plate was a bit of wrought iron. We made a pattern; made it from cast iron; put in two set-screws instead of one.

Q. Now, wasn't that first stop plate made with only one stop, and didn't you change it to two when it came back?

153 A. Oh, no; it had two.

Q. You are positive about that?

A. Yes; I know how it was from two points at which the swinging arm came to rest upon the stop plate.

Q. Did you hear the testimony of anybody else upon that point,

the testimony of Mr. Hoag and others, who claim to have invented it?

A. I think I did; most of it.

Q. Didn't he claim, in your presence, there was but one stop on it when it came back and you put on two?

A. My present recollection is Hoag claimed that there were but one set-screw; on its return he put in the second set-screw. I think you will find that is the fact.

Q. Then, when you saw Mr. Burton, you had two defenses, and you then made your election which one of them you would take?

A. I think I—like a very proper client—told my lawyer the case; told him all I knew about it, and then took his advice as to what was best to be done.

By Mr. BURTON:

Q. Did you see Mr. Marsh's application for a patent at any of these conversations before you began using the apparatus?

A. No.

Q. You didn't know what the application contained or what was in it?

A. No; all I knew was he said he had made an application and it had been rejected.

Q. You didn't know how extensive it was?

A. No, sir.

By Mr. PARKER:

Q. When did you first see the application or specification?

154 A. I saw a copy of the file wrapper along in the summer or spring of 1881; a copy of it.

Q. You have a copy of it?

A. Yes.

Q. When did you get that copy?

A. Along in the spring or summer of 1881.

Q. Was it before you saw Mr. Converse?

A. No; I think it was afterwards; I am not sure as to that.

Q. When did you first see the copy of Marsh's patent or specification or drawings of it?

A. I think about the time you began this suit.

Q. When did you first see any anticipatory patent, so called?

A. Well, we had Farrabee very early in the suit.

Q. When you saw Mr. Converse the first time didn't you have it?

WITNESS: Have what?

COUNSEL: This patent that you are speaking of. Didn't you show it to him?

A. I don't know whether I had them or not.

Q. Didn't you show drawings to Marsh before he obtained the patent and argue with him that he couldn't get one?

A. Oh, no.

Q. Didn't you know all about the details of this invention immediately after the allowance of the patent?

A. I knew about its details before the allowance of the patent, because I had seen the device itself.

Q. Didn't you commence investigating the matter at once, about the time that patent was allowed or after it was issued?

155 WITNESS: Do you mean investigating the legal qualities of the patent?

COUNSEL: Yes, sir; that is what I mean exactly.

A. No; I think I made no move towards that until after the indications of the beginning of the suit.

Q. What do you mean by "indications of the beginning of a suit"? That is very indefinite.

A. The presentation of the license was one of the indications, to my mind.

Q. Do you mean the presentation of the notice?

A. I mean the notice.

Q. Do you mean to say you didn't investigate before that?

A. I don't think we had given it any particular attention before that.

Q. Then, at the time you claimed to Converse that it was old when you first saw him—if you claimed it—you didn't know whether it was or not?

A. I knew pretty well what I was talking about at that time if I had not these patents and specifications, which you claim to-day I did; of course I must have had them. So far as the device itself was concerned I didn't need patents and specifications to tell me what that was.

EUGENE M. CONVERSE, a witness for complainant, testified as follows:

Examined by Mr. HILL.

My name is E. M. Converse; age, 29; reside at Battle Creek, and am an attorney-at-law. I know the complainant.

Q. Who was the active manager of the corporation?

156 A. Edwin C. Nichols; have known him as such for ten years or thereabouts.

Have known the defendants Marsh and La Fever—La Fever 8 or 9 years and Marsh about 6 years; have heard of Marsh's valve gear; first heard of it some time in the year of '80. My first knowledge was a report about town that Marsh had discovered some wonderful invention; heard of it from Marsh himself the latter part of '80 or fore part of '81; talked with Marsh several times about it. He was in the habit or, at least, frequently came to my office, and we discussed his invention. I remember an occasion when he talked about its being used by complainant; that was some time in January, '81, or February; possibly the fore part of February.

Q. What was said by him and you on that occasion?

Conversation objected to on the ground that witness was defendant's attorney.

Q. Were you the attorney of Marsh and La Fever in January,' 81?
A. I was not.
Q. What was that conversation?

Objected to on the ground that he was the defendant's attorney.

A. Marsh was in my office talking about the device and the use of it by Nichols, Shepard & Company, and also related to me the names of other concerns using the device, and various matters connected with him and the invention. He stated to me that complainant refused to take the license; refused to pay them anything for the use of the device. He at that time explained how he came to put the device on.

157 Q. What did he say in that regard, as near as you can remember?

Objection repeated.

A. He stated that he wanted to put that device on one of their engines; that he went to see E. C. Nichols, and, after some talk, Nichols consented that he might put it on; that he did put the device on the traction engine which afterwards was taken to the fairs, I think, in Illinois and St. Louis. He related to me some of the particulars of his going with the engine, and stated that at first the understanding between him and Nichols — that they should make this—use this device; that Ed. had treated him so that he proposed now that he should pay for it; that they were abundantly able to pay for it, and he intended to insist upon it. That is substantially what he said.

Cross-examination:

This conversation, as near as I can fix it, was the latter part of January or fore part of February, '81. It is my recollection there was more than one conversation at the time—at about that time—within a week or two; three weeks, perhaps. They were at my office, in Battle Creek; do not now recollect that any one else was present, but there might have been.

Q. What did he come there for?
A. He came up to talk matters over, I guess; saw him very often during January and February; had then been on speaking terms with him—had two years.
Q. Were you consulted in any way by him or by La Fever with reference to a notice that was sent to complainant?
A. Afterwards I was.

158 Q. Did you give advice with reference to the notice?
A. I think I did, if I recollect rightly.

Q. You think this was after that conversation?
A. I am not certain about that; that is my recollection.
Q. They consulted you with reference to this other business, did they not?

By the COURT:

Q. Who?

By Mr. PARKER: Marsh and La Fever.

WITNESS: What business?

By Mr. PARKER: This infringement—that is, the use by Nichols, Shepard & Company of this device.

A. They did at one time employ me in the matter.

Q. They employed you before the notice was sent to cease infringing?

A. I wouldn't say as to that. I don't think I sent any notice.

Q. They consulted with you, you say, as to a notice?

A. I think I had some knowledge of the notice. I think that they consulted with me about it. I am not certain.

Q. Do you remember the date of that?

A. O, no.

Q. Do your books show when you were first consulted in the matter?

A. I think they do, as an attorney; yes, sir.

Q. When was that?

A. Well, to the best of my recollection, I was first employed by them in the latter part of March, of 1881.

Q. The latter part of March?

159 A. Yes, sir.

Q. Now, when they consulted you with reference to this matter of the use of this device by Nichols, Shepard & Company was there anything said with reference to any use by permission?

WITNESS: By permission?

Q. Any use by Nichols, Shepard & Company by permission.

A. I don't think Mr. La Fever ever said anything about it.

Q. Did Mr. Marsh?

A. At the time I speak of Mr. Marsh told me what the understanding was between him and Mr. Nichols.

Q. Did that matter come up again when he consulted you?

A. Yes, sir.

Q. You are positive about that, are you?

A. Yes, sir.

Q. Whether it would be a defence or not?

A. Mr. Marsh talked with me about it; yes, sir.

Q. Did you advise the sending of the notice?

A. As I stated, I don't know; perhaps I did; I had some knowledge of a notice being sent or about to be sent; I have a recollection of that.

Q. Did you advise the bringing a suit for infringement?

A. I think I did.

Q. Have you stated in those conversations Mr. Marsh's exact language?

A. O, no; substantially his language, though.

Q. Did he say in what particular Mr. Nichols had treated him shabby?

160 A. No.

Q. He didn't say whether it was any failure to carry out the agreement on their part?

A. No.

Q. Nothing of that kind?

(No verbal answer.)

Q. Did you afterwards, when employed as their attorney, see Mr. Nichols about this matter?

A. Yes, sir.

Q. How many times?

A. O, two or three times.

Q. Did you make any statement or report in writing to Marsh and La Fever of the interview or those interviews?

A. I think on one or two occasions I made a synopsis of our interview and gave it to one of them.

Q. Is that paper in your handwriting, marked Exhibit "No. 11"?

(Witness examines Exhibit "No. 11.")

A. Yes, sir.

Q. Will you please look at this paper and see whether or not that is the report that you made, that you have referred to, to Marsh and La Fever of those interviews?

A. I think it is.

Q. Are those statements correct?

A. I think they are, substantially.

Q. Did you state in these statements to Marsh and La Fever the whole of the conversation or the substance of the whole of the conversation that took place between you and Nichols on those occasions?

A. O, no.

Q. You did not? Why didn't you state it all?

161 A. I stated I made a synopsis of such points as I thought would be of the most interest to them.

Q. What else did he state in that conversation or those conversations besides what is in those statements?

A. A great deal.

By the COURT:

Q. That Mr. Nichols said?

By Mr. PARKER: Yes, sir.

(After argument as to whether it is proper cross-examination or not the question was withdrawn.)

Q. How long after the date of this last paper, dated May 12th, were you employed by Marsh & La Fever?

A. Not long; a few days.

Q. You were a witness in the case in Chicago, were you not?

A. Yes, sir.

Q. Between Mr. Scott and Marsh and La Fever?

A. Yes, sir.

Q. Mr. Converse, who employed you—Mr. Marsh or Mr. La Fever?

A. I think both of them.

Q. Both present?
A. I think they came together.
Q. Had you seen Mr. La Fever before this?
WITNESS: Before my employment?
A. I think I had.
Q. To whom did you disclose this conversation or these conversations that you had with Mr. Marsh?
A. Henry H. Brown.
Q. That is an attorney of this court at Battle Creek?
A. Yes, sir.
Q. He was Mr. Scott's attorney, was he not, in the Chicago case?
162 A. I don't know.
Q. How came you to tell him?
A. He came to talk with me about it.
Q. Did you know in whose behalf?
A. He stated that he was looking up some evidence for Scott's attorney in Chicago.
Q. Did he say anything about Nichols, Shepard & Co.; he was acting for them?
A. No, sir.
Q. When was this?
A. About a year ago now.
Q. About the time you gave the testimony over there in Chicago?
A. O, no.
Q. Before that—some time before?
A. O, yes; I think May or June before. The testimony at Chicago was in November.
Q. Did you ever have any conversation with Nichols about it?
A. Yes, sir.
Q. When?
A. Well, about the time I gave my testimony at Chicago.
Q. At the time when you told Mr. Brown did you refer to your book and see when you were employed by Marsh and La Fever?
A. Yes, sir; Mr. Brown—let me explain—came and asked me about matters, and I told him I would look it up, which I did, and located my dates. Then I told him the facts as stated here, substantially.
Q. So you are positive it was before that employment?
A. As an attorney for them; yes, sir.
163 Q. Are you equally positive it was before or after the notice was given to Nichols, Shepard & Co. to desist from manufacturing the device?
A. I was not employed by them until after the notice was given, to the best of my recollection.
Q. Weren't you paid for your employment at that time and in that connection?
A. I am unable to say.
Q. Didn't you give a receipt for the payment?
A. I am unable to say.

Q. You wouldn't undertake at this time now to give Mr. Marsh's exact language in that conversation?

A. O, no.

Q. Or those conversations?

A. No, sir.

Q. You give the impressions which were upon your mind?

A. No, sir; I give substantially what he said.

Q. Can you give accurately what he said?

A. I don't think I can improve upon what I have given.

Q. Do you swear that is his exact language?

A. O, no.

Q. Or only what is substantially the language?

A. It is substantially what he said to me; yes, sir; that is just it.

Q. No more and no less?

A. Yes, sir.

Q. Was there any more of it than you have stated?

A. There might have been more of the talk, of course, but that is substantially the statement made to me. As to the exact language, I don't pretend to be able to give it at this time.

164 Q. He didn't state the details of any contract that had been made, that you remember?

A. No further than what I have stated—the circumstances under which we put this device on the engine; the facts in regard to its being an engine that they were going to exhibit at the fairs, who went with it, and what the understanding between him and Mr. Nichols was in regard to it.

Q. Just as you have detailed it?

A. Yes, sir; that is the details.

Q. That is all he said?

A. That is all I recollect now; yes, sir.

Q. And he didn't tell you wherein Mr. Nichols had treated him shabbily?

A. Not to my recollection; he had frequently expressed himself unfavorably towards Mr. Nichols at about that time.

Redirect examination by Mr. HILL:

Q. Mr. Converse, you were present at an interview in January or February, 1882, when Marsh, La Fever, Scott, and Mr. Nichols were present, after the discovery of the difficulty with the patent, the same not being signed by the Secretary of the Interior?

A. I think I was; yes, sir.

Q. Do you remember what was said by Mr. Nichols, if anything, in regard to the agreement or understanding between him and Mr. Marsh to the use of the invention on that occasion?

A. Well, I am unable to give his statements.

Q. Substantially?

A. There was considerable talk at that time, and Mr. Nichols made the same claim then that he had made frequently be-

165 fore to me as to his right to make this invention.

Q. To use the invention?

A. Yes, sir; but the drift of their conversation was not on that

point; it was how Marsh, La Fever and Company were going to get out of what seemed to be a dilemma.

Q. You remember the propositions Mr. Nichols made—substantially the propositions that he made to them as to the settlement of the matter?

A. I do not.

Q. And the course to be pursued?

A. I am not able to fix the question of the proposition at that time, whether it was at that time or not.

Q. You distinctly remember the interview and the purport of it?

A. Yes; I remember the interview and the purport of it.

Q. Do you know how that interview came to be called?

A. Well, I think, on the suggestion of—possibly my suggestion.

Q. What was that suggestion, if you remember?

A. To have Marsh and La Fever and Mr. Nichols get together.

Q. For what purpose?

A. To see if they couldn't adjust their differences.

Q. On what account?

A. Well, because of the fact I felt that they had discovered their patent was defective, and we thought that it was a good time to try again and see if they couldn't close up their controversy.

166 Recross-examination by Mr. PARKER:

Q. When was that interview?

A. Well, it was in January or February, 1882.

Q. Where?

A. At my office.

Q. Your office?

A. Yes, sir.

Q. How long did it last?

A. Not long.

Q. Was Mr. Scott present?

A. I think Mr. Scott did come up; yes, sir; he had nothing to say, however.

Q. What time during the day was it?

A. In the evening.

Q. Do you say Mr. Nichols claimed on that occasion that he had a shop right from Mr. Marsh?

A. He claimed the right to make this invention; yes, sir.

Q. Did he claim the right to make the invention?

A. Yes, sir.

Q. Did he claim he had a shop right, do you mean?

A. I don't think he said shop right. I think he went on, under the understanding with Marsh, that he had the right to make those reversing gears.

Q. Did he state what that understanding was?

A. Not at that time; no, sir; to my recollection.

Q. Did he say anything about that Marsh had made no invention?

A. I don't recollect he did at that time. He might have said something about it. I don't think he did.

167 Q. If Mr. Marsh had made no invention, did he say anything about his having the right to use it?

A. I don't think he said any such thing. He didn't in my presence, as I now recollect.

Q. Were you there all the time?

A. I was; yes, sir.

Q. Hear all the conversation?

A. I think I did.

Q. Have you given it all?

A. O, no.

Q. What reply did Marsh make to that assertion of Nichols that he had a right by virtue of his agreement?

A. The usual reply. He ignored it.

Q. Denied it?

A. He ignored it entirely; started in somewhere else.

Q. Didn't he deny it?

A. I don't think he did at that time. I don't think he replied at all to it; possibly he might. It is my recollection Mr. La Fever did.

Q. When did he deny it?

A. I have heard him deny it several times on the stand as a witness.

Q. Didn't he deny—and haven't you heard him deny—it other times?

A. I think I have; yes, sir.

Q. Did Mr. La Fever deny it in Marsh's presence and in his hearing?

A. As I stated, my recollection is that Mr. La Fever made the reply to the remark made by Mr. Nichols on that occasion instead of Mr. Marsh. I am not certain about it, though.

Q. That was in Marsh's presence?

168 A. They were all there; yes, sir.

Cross-examination by Mr. BURTON:

Q. Mr. Converse, what was this paper which has been marked Exhibit "11?"

A. It was—it is a memoranda or synopsis of an interview had or two or three interviews had with Mr. Nichols.

Q. Made for what purpose?

A. For the satisfaction of Mr. La Fever.

Q. Is it included in that synopsis—all that took place between you and Mr. Nichols?

A. No, sir.

Q. At the time of making this or at the time of this interview or those interviews which you had with Mr. Nichols, which were epitomized in this paper, you were representing Marsh, La Fever & Company?

A. Yes, sir.

Q. You were then in their employ?

A. Yes, sir.

Q. Does this synopsis give a statement of all of the conversation had by you with Mr. Nichols?

A. It does not.

Q. In what respect is it lacking?

A. That is only an outline of some of the matters of our conversations.

Q. What, if anything, did Mr. Nichols claim to you that is not in the synopsis, if you remember?

By Mr. PARKER: I object. You cannot make evidence of the complainant's own admissions, statements, or claim.

By Mr. BURTON: Statements between the complainant and the defendants' agent.

169 (Last question repeated.)

A. There was a good deal said that is not contained in those statements relative to the device and the relations between Mr. Nichols and Mr. Marsh and the probable course that would be pursued in case of litigation. Various things were talked of. Mr. Nichols and I talked the entire matter over very freely, I think.

Q. At the time of these conversations were you, on behalf of Mr. Marsh and La Fever, in any way threatening suit against Mr. Nichols?

A. While these interviews were had with a view to arriving at some adjustment of the difference that has arisen between them, I wouldn't say that I was their agent, threatening a suit, but we contemplated a suit.

Q. On the first page of this is a statement: "That there is an understanding that they (N., S. & Co. and Marsh) were to handle the device together, but that Marsh had gotten the big head and no one could do anything with him." That was a statement Mr. Nichols made to you?

A. I think that is substantially the statement made by Mr. Nichols.

Q. What was Mr. Nichols' language on that point, as near as you can remember, on the understanding that they—N., S. & Company—were to handle the device together—N., S. & Company and Marsh were to handle the device together? Did Mr. Nichols state that there was to be a partnership or something of that kind?

A. Mr. Nichols at that time stated to me that his arrange-
170 ment with Marsh was that they should have the right to make this device. Mr. Nichols, I think, said to me that he had every reason to believe that there was some other influence—some influence brought upon Mr. Marsh that had caused him to take the course that he was then pursuing.

Q. What course was he pursuing?

A. Well, seeking to have Nichols, Shepard & Company pay for the device instead of their having it as was the understanding. I think at that time—or at one of the interviews, anyway—Mr. Nichols credited the going back on the understanding to Mr. La Fever, very largely.

Q. There are several of these reports, or are they all one report?

A. More than one, I think.

Q. Were they all made at one time or made at several different times?

(Witness examines Exhibit No. "11.")

A. They are two different reports.

Q. Didn't Mr. Nichols at all times claim that he had the right to use that device by reason of the understanding that he had with Marsh and for which he had paid?

A. Yes, sir.

By Mr. PARKER: I object. The question goes beyond the scope of any agency that has been proved; that it is an attempt to make testimony by the complainants of admissions or statements in their own favor.

Redirect examination by Mr. PARKER:

Q. How soon after these interviews was that report made?

A. The first one, I think, was made within a day.

171 Q. Is your recollection now any better regarding that than it was then as to what took place between you and Mr. Nichols?

A. No, I think not.

Q. You were asked in reference to this statement in the first report that Mr. Nichols said that there was an understanding that they (Nichols, Shepard & Company and Marsh) were to handle the device together, and you replied that he claimed that he had the right—that they had the right to use it on their engines. Now, did you make this report from that statement that you say he made?

A. I made that report from that interview; yes, sir.

Q. From that statement?

A. That doesn't include any other statements.

Q. What is the rest of it, then?

A. That doesn't include——

Q. Do you mean this doesn't include any other statement?

A. Certainly not.

Q. Then did he say on that occasion that there was an understanding that they (Nichols, Shepard & Company and Marsh) were to handle the device together?

A. I think he must have said so; it appears to be there.

Q. Then he stated further that they were to have the right to use it on their engines?

A. Yes, sir.

Q. I understand you?

A. Yes.

Q. Why didn't you put that in there, too?

172 A. I don't know; I would like to explain how I came to make that paper or those papers; maybe you will understand it then.

COUNSEL: I prefer you wouldn't explain, but answer the question. I asked you why you didn't put that in there.

A. Because I was under no obligation to do it; there was no occasion for it.

Q. Was there any more or wasn't as much occasion for it as there was to put in this statement that you did put in?

A. No, sir.

Q. Why not?

A. Now, I can explain, I suppose. After having the interviews with Mr. Nichols I met Mr. La Fever and Mr. Marsh and related to them as near as I could the result of the interview and what had been said and done. Then, at the request of Mr. La Fever, the first interview, the first synopsis was made, if I am not mistaken, at that time—his request to me to jot down what I considered the essential points, points that he wanted a memorandum of; and I made them at that time—gave them to him. I think he said that he wanted to show it to Mr. Metcalf, a gentleman that had been acting for them in the matter of getting the patent.

Q. He was acting then as their attorney, was he not, as you understood?

A. I think he was interested with them; yes, sir.

Q. At that time did Mr. La Fever tell you the particular points that he wanted put down?

A. He called my attention to the points. After having stated as near as I could the entire conversation, he then asked me to
173 make that synopsis of what Mr. Nichols had said of what I had related to him.

Q. Then you made this as a synopsis of the whole of the conversation with Mr. Nichols, did you not—that is, he understood it so?

A. I don't know how he understood it, Mr. Parker.

Q. You say he asked you to make a synopsis of that conversation?

A. Yes.

Q. As the result of that request you made this synopsis?

A. Yes, sir.

Q. Why didn't you put — the other statements, if Mr. Nichols made them, as well as this statement that you have—this understanding about working it together?

A. Probably there was no reason for it.

Q. Wasn't the reason this: that Mr. Nichols didn't say so?

A. No, sir; Mr. Nichols did say so, most emphatically.

Q. If he did say so, then, you didn't remember it, did you, when you wrote this statement?

A. I have remembered it ever since he said it.

Q. Did you remember it when you wrote that statement?

A. Certainly I did. I have every reason to believe that I related it to Mr. La Fever.

Q. Do you say that you did?

A. I say that I have every reason to believe I did.

Q. Do you say that you related it to him?

A. I think I did. I have every reason to believe I did.

174 Q. You were sworn in Chicago in the case of Scott *vs.* Marsh and La Fever?

A. Yes, sir.

Q. Didn't you swear on that occasion that this was a synopsis of the whole conversation?

A. Just as I have stated here. I think I did.

Q. Were you not asked in that testimony, That (that is, this paper) was the substance of it, wasn't it? And did you not answer, That was a part of the statement?

By Mr. BURTON: I object.

A. I think so, if it so says there.

Q. Then weren't you asked, Wasn't that the substance in these two papers you signed, with the dates I have given you (referring to the two papers here in the court)—were not those the substance of the conversation you had with Mr. Nichols? And did you not reply, Yes, sir; that is a synopsis; that is the substance.

A. I presume I did.

Q. On that occasion did you testify to any other conversation or any other portions of the conversation other than is embodied in this paper?

A. I think I did testify further in regard to conversations.

Q. Did you not state that the matter in these papers was true in that testimony?

A. I could tell better by seeing the testimony.

Q. I will read it to you. After referring to the paper dated April 26th, 1881, and May 12th, 1881, you were asked, Is that yours? Answer. Yes, sir. This question—that is correct, is it?

175 A. Yes, sir.

Q. Question. Was what you stated in that paper true? Answer. I think so; yes, sir.

A. Yes, sir.

Q. Then, Question. In this conversation you stated in that paper that you had with Mr. Nichols was a true statement, wasn't it? Answer. That was, I said yesterday, simply a synopsis of our conversation.

A. Yes, sir.

Q. Now, when was this report dated May 12th, 1881, written; how long after the interview?

A. I think two or three days, maybe; along there; to the best of my recollection it was three or four days.

JAMES SCOTT testified on the part of the complainant as follows:

Examined by Mr. BURTON:

I am 75 years old; am one of the defendants; have known complainants by reputation for the last 15 years; had more or less communication with them; Mr. E. C. Nichols, manager of the business. I have lived in Battle Creek 17 years. During the last 7 or 8 years I have been farming; have been in the wood business; have owned more or less land; have dealt some in patents also; first became

acquainted with Marsh in 1880, and with La Fever in the winter or spring of '81; first had something to do with them in relation to Marsh's valve gear in the fall, September or October, of '80, before the patent was granted. He brought a drawing of it to my house; showed it to me before he sold to La Fever; brought it for the purpose of sale, and offered me a half interest for $300.

176 Objected to as incompetent and irrelevant.

I did not purchase. I saw Marsh some time in February following. I knew he had sold a half interest to La Fever. He thought they would sell a third to me.

Q. Did you wish to purchase it at that time?

A. They talked it up in that way, that I did entertain an idea to purchase.

Q. What inducement, if any, did they offer to induce you to purchase?

A. Well, sir, a good many; if it is necessary to go into all——

Mr. Parker objected to this matter as immaterial and irrelevant.

WITNESS: I can tell all of them.

Q. Go on, if you will.

A. They represented to me that Nichols, Shepard, for one, was using it; were putting on from eight to ten a week, as I understood them.

Q. Did they tell you under what sort of an arrangement Nichols & Shepard were using it?

A. They said they would take a license in June following.

Q. Did they state whether they had taken one or not?

A. They said they had not taken it.

Q. Did they state to you whether Nichols & Shepard would pay a royalty or not?

A. That was the understanding, that they would pay a royalty.

Q. How much?

A. The royalty was $5 for each engine they put it onto.

177 Q. Did they state that other people were paying royalty?

A. Yes, sir; they had taken five, I think, other licenses, and they were paying royalties, or were going to. They were putting on then, they said, at the rate of about 40 a week; that was besides Nichols & Shepard.

Q. Why did they make a distinction between Nichols & Shepard and other parties?

A. I asked them the question.

Q. What reply did they give? Why did they make any distinction between Nichols & Shepard and others?

A. That I never knew, really.

I bought an interest in the patent on the 5th of March, '81; was afterwards a party to a suit in Detroit against Nichols, Shepard & Company.

Q. How much did you give for your interest in the patent?

Objected to as incompetent.

A. $5,300—$5,000 for the United States; all outside I was to have for $300.

Q. What did you give—money or property?

A. Both; that was agreed upon as the value of the property turned over; paid partially in money and partially in real estate.

Exhibit "No. 7" shown witness.

Q. Did you know anything about that notice at the time you purchased?

A. I never saw it before, nor never knew of it before to-day.

178 Notice dated the 11th of February, '81.

I became aware that the so-called patent had not been signed in the spring of '82, in Mr. Converse's office; he called my attention to it. I think no one was present. At that time or soon after we had a meeting at Converse's office in which Marsh, La Fever, & Nichols were present. The purpose was to try to settle our differences; I think it was at Mr. Converse's instigation; he seemed anxious to get us together; he requested me to come; we had a considerable talk there; I could hardly repeat it.

Q. Do you remember whether Mr. Nichols at that meeting made any claim of any right by agreement with Marsh to manufacture this device without payment of a royalty?

A. I think Nichols made such a claim, in which he offered to surrender the right that they had; all the rights he had that he would surrender, provided we would give them the right to use it.

Q. In writing?

A. Yes, sir; I think that was.

Q. What did Marsh or La Fever say to that claim?

A. I think Mr. La Fever spoke and repudiated the claim; I think he did.

Q. What did Mr. Marsh do?

A. I think he said nothing.

Q. What was the final result of that meeting?

A. Didn't amount to anything.

Q. Did you, Marsh, and La Fever bring another suit in the U. S. court?

A. There was another suit brought almost immediately after the first one was decided.

Q. When did you first become acquainted to say that you
179 knew and understood the meaning of Judge Brown's decision in the first suit?

A. On the 25th of September, '83.

Q. How did you learn this meeting?

A. I went to Nichols & Shepard's office; Mr. Nichols showed me that decree.

Q. Had you seen it before that time?

A. Never.

Q. It was in the Official Gazette, printed?

A. Yes, sir.

Q. Did you at that time meet Mr. Nichols at his own house?

A. The night before; previous to that I met Marsh & La Fever at my house. We consulted together about going over to Nichols'. A proposition was made that Marsh should go; he rather objected. La Fever proposed I should go, and I objected a little about going. We then were talking something about trying to compromise, and we talked the thing over and separated without anybody, as I understood, agreeing to go. The next day I made up my mind I would go up there, and so I did; found Mr. Nichols at home; he was in his office room. We had just got to talking when Mr. Marsh came in. Neither of us knew the other was coming, as I understood. We entered into conversation in regard to this patent and the use of it, and I think that Nichols and Marsh were talking about compromise. We had some conversation about the matter Nichols asked Marsh what he would compromise; what he thought about; how are you going to compromise. Marsh said he didn't think that he wanted to say anything; he should leave it with his counsel, Mr. Parker, at Detroit, if there was a compromise made. Nichols replied,

180 "I would like to see a business of mine that I couldn't fix a price on or could not make a proposition to compromise." Marsh said nothing in reply. I told Nichols I would compromise for $10,000. Nichols said he wouldn't entertain that. We got up about that time and stood between Nichols and Marsh. Nichols said to Marsh, says he, "You know," says he, "that you promised us and agreed that we should have the right to use that device of yours on all our engines." "Yes," says Marsh, "but it wasn't in writing." "But you would have put it in writing if I had asked you."

Q. Who said that?

A. That was Mr. Marsh.

Q. Who said, You would have put it in writing if I had asked you?

A. Mr. Nichols. "Yes; but you didn't ask me." Mr. Marsh said, "Yes; but you didn't ask me."

Q. What further conversation?

A. That was impressed upon my memory because it was right in direct opposition to what they had talked to me; so impressed upon it that it isn't—it can't possibly be wrong.

Q. You say that was in direct opposition to what they had talked to you?

A. Mr. Marsh had said to me that he had no understanding with Mr. Nichols. I had repeatedly asked him — had no understanding with Mr. Nichols regarding it, and had no terms.

Q. Why had you repeatedly asked Mr. Marsh if he had any understanding with Mr. Nichols?

A. I don't understand you.

Q. Why did you ever ask Mr. Marsh if he had any understanding with Mr. Nichols previous to this?

181 A. Because we was entering into a suit; had a suit. I had learned somewhere that they made that claim.

Q. You had asked Mr. Marsh about it?

A. I did.

Q. Was there any further conversation that evening?

A. That was it, pretty much; that was about the last thing that was said. As soon as I got out on the walk I asked Mr. Marsh on what he had admitted.

Q. What did you say to Mr. Marsh?

A. I told him I was surprised that he should go into the enemies' camp and make such an admission as he had made there that night.

Q. Did he make any reply to that?

A. He said he didn't think it amounted to anything. Says I, "I think you will find it will." That's why I went to Mr. Nichols the next day. I had acted in perfect harmony with Marsh and La Fever up to that time.

Q. The next day you went to——

A. I called at Mr. Nichols' the next morning, the first thing.

Q. How soon after that did you take action based on that?

A. That same day, sir, I did. When I saw and talked with Mr. Nichols I learned of this decision.

Q. You took counsel, and as the result of the counsel you inaugurated this suit against them in Chicago?

A. That's it.

182 Cross-examination by Mr. PARKER:

Q. Mr. Scott, you have been sworn before in this case?

A. I believe I have.

Q. Your testimony was taken down in writing, was it not?

A. I think it was.

Q. Did you sign it?

A. I don't know; I don't remember.

Q. Is that your signature?

(Witness examines Exhibit No. 12.)

A. Yes, sir.

Q. Do you want to offer this in evidence?

COUNSEL: I am not particular.

WITNESS: There may be some little discrepancy, but the substance of what I have sworn to in those statements is alike, I think.

Q. Was the time of taking this deposition the only time that you have stated the facts about this conversation that you say took place at Mr. Nichols' house?

A. No; I think I met him twice.

Q. You testified in that suit at Chicago, did you not?

A. Yes.

Q. You made an affidavit also in that case?

A. I guess I did.

Q. Was any portion of that affidavit published?

A. I think it was.

Q. Did you not so testify when that deposition was taken?

A. Perhaps I did.

(Witness shown Exhibit 13.)

183 Q. Wasn't that article shown to you and was it not marked as an exhibit in connection with your deposition?

A. I can't tell you.
Q. Do you know where that affidavit is now?
A. I don't.
Q. Was it ever filed in that case?
A. I can't tell you.
Q. Do you not so testify in your deposition?
A. I don't know; perhaps I did.

By Mr. PARKER: Mr. Burton, will you produce that affidavit?
Mr. BURTON: I haven't got it.
Mr. PARKER; Haven't had it?
Mr. BURTON: I have had it. I haven't got it now; haven't had it for the last six or eight months.

Q. (To witness.) Did you read this article that was published?
A. I think I did.
Q. You say there might be a slight discrepancy between this deposition and this present testimony?
A. There possibly may be, but I don't think this deposition that I am relating about is so full as I told it. I don't think there is so much, perhaps, as was said then—as I swore to then. Possibly there may be more. I don't think my memory was any better regarding it than it is now.
Q. Do you recollect stating in that deposition that you never heard Mr. Nichols make that claim until he made it that night?
184 A. Possibly I might have said so, but he made that—I think he made that—in connection with what they had against that other device they had there of Hoag's. I think he put it altogether, claiming we should give him to settle—give him a shop right. I think he put up all the claims he had. He wanted a shop right—a right to use it.
Q. He offered to trade the Hoag patent to settle it?
A. I think he did; something besides. I think there was something of that kind.
Q. Wasn't that other proposition to settle by offering the Hoag patent to Marsh, and they to have a shop right for both of them?
A. I think it was, but I think he had some claim against Marsh at that time. La Fever objected. At that time we were with Converse in '82.
Q. In that interview he made the claim, also, that Marsh had stolen the device, didn't he?
A. We had a great deal of talk. I couldn't tell you for that.
Q. I call your attention to your testimony, question 98, in your deposition: "Did they not claim that Marsh had stolen the invention, and that his patent was not good for anything? Answer. I think they did claim that his patent wasn't good."
A. They claimed most everything. I can't remember particularly about it.
Q. Wasn't that the claim, so far as you understand, all the way through—that Marsh's patent was not good for anything; that he

had stolen it; that they, complainant, had the only valid
185 patent there was upon any portion of the device? Wasn't that the position they took?

A. My understanding was that they claimed that there was other patents. I think they had five or six others that they were bringing forward to show that that patent wasn't good. I think that that was so.

Q. In your testimony of the conversation that took place at Nichols' house didn't you say that Mr. Marsh always did deny that they had a right. Referring to question 71, Scott's deposition, "Do you remember turning to Marsh and asking if that was so, and Marsh denying it? Answer. Marsh always did deny it." Do you remember giving that testimony?

A. Always denying his having a right; yes, sir; he did. He always had denied.

Q. Why did you go to Nichols' the next morning?

A. From that admission that Marsh had made the previous night. I didn't know the opinion of Judge Brown until I got there.

Q. Did you say anything to Nichols about this statement that Marsh had made?

A. I think I did. This was the first time I ever saw the opinion. I had been informed we were beat at Detroit. I had never been shown, to my knowledge, a type-writer copy of Judge Brown's opinion long before this.

Q. Did I not show you a type-writer copy of the opinion of Judge Brown in the Williams House in April of that year, on Sunday?

A. I don't think you did.

186 Q. Wasn't a copy sent to Marsh, La Fever & Co., and did you not see it before that time?

A. I did not.

Q. Did we not have an interview at the Williams House, by special appointment, about that decision, and wasn't the whole matter talked over?

A. No, sir. It was at the Lewis House, I guess, you mean.

Q. We had an interview at the Lewis House?

A. Yes, sir.

Q. Wasn't the whole matter talked over and the opinion shown?

A. We came together there.

Q. Wasn't it talked over and the opinion shown at the Lewis House?

A. Mr. Metcalf done the most of the talking.

Q. Weren't you there?

A. I was present.

Q. Didn't you participate in the talk?

A. I couldn't get no chance to talk.

Q. Didn't you hear what was said?

A. I stayed there and heard what I could. I learned we were beat at Detroit.

Q. After that interview broke up didn't you come back to the Lewis House to see me in the hallway and talked the matter over again, especially with reference to selling your interest?

A. I think I talked with you again about it; I did.
Q. Did I not then explain to you the nature of the decision?
A. I don't remember that you explained the nature of the decision; I do not.
187 Q. Did you come back and ask me some questions about it?
A. Possibly I might.
Q. When you filed your bill in Chicago did you say anything in the bill about this admission of Mr. Marsh's?
A. I think so.
Q. Are you positive?
A. O, I can't tell you certain about it. I think I stated my case there.
Q. Wasn't that put into the supplemental bill?
A. I don't know where it was put.
Q. Some time afterwards, a long time afterwards, in fact, or rather an amendment to the bill?
A. I rather think it was. I guess you are right in that.
Q. Have you stated Marsh's language on that occasion, at Nichols' house, that evening?
A. As far as I could; the substance of it, I think; very nearly the words.
Q. How far were you from him at the time that talk was had?
A. Well, sir, they wasn't more than ten feet apart. I stood between Mr. Nichols and Mr. Marsh; heard very plainly.
Q. Did you hear very plainly?
A. Anyway I did on that occasion, as I stayed there.
Q. Were you not slightly deaf on that occasion yourself at that time?
A. I don't think I was, sir; no, I don't.
Q. Is your hearing any worse now than it was then?
188 A. I don't think it has got any better.
Q. Is it any worse?
A. I sometimes think it is. I don't think I am getting any——
Q. As a fact, at that time, were you not hard of hearing?
A. I was; yes, sir; I was.
Q. You know whether you heard all that was said or not?
A. I think I did, because I sat there where I could hear. I sat there between them. I think I could hear what was said.
Q. You are positive about the language?
A. I am very positive about it, because it made an impression upon me, so much that I went to Mr. Nichols and Shepard the next morning. I had no idea of going there. I was acting in harmony with them up to that time.
Q. With whom?
A. With Marsh and La Fever.
Q. Then the reason you went to Nichols, Shepard & Company and the reason you didn't act in harmony with them was this admission?
A. That was what took me there, and then this decree.
Q. This you had never known before?
A. I hadn't known of it; only I knew we got beat. I didn't know the contents of that decree. I never saw it.

Q. Do you mean to say that you didn't know that it was because that patent wasn't signed?

A. No, sir; I know that. I don't pretend to say that I un-
189 derstood what was the matter. Mr. Parker says, "Now, we'll commence a new suit." Mr. Bell was the acting commissioner, and he was also under Mr. Shurtz, and he says the same man that was acting under Mr. Shurtz, he is acting under Mr. Kirkwood, and he signed it. "Everything is all right now. We'll take our testimony we have already got. We'll commence a new suit. We'll be placed right where we was before. Now it will be all right." That is the way I understood it.

Q. Do you recollect having this Judge Brown's opinion?

A. Yes, sir; I could tell you if I had it. Mr. Judge Brown said he didn't see any judicial way for us to escape that decision.

Q. Did you talk it over with Nichols at that time?

A. No, sir; I had it there—borrowed it of him. I went right on straight for Chicago.

Q. At once?

A. In two hours.

Q. You didn't see Marsh and La Fever about it?

A. No, sir; in two hours I was on my way to Chicago.

Q. Why were you in such a hurry?

A. I wanted to go to Chicago. I had got started.

Q. Why didn't you go and tell Marsh and La Fever that you had been deceived in that matter?

WITNESS: Why didn't I do a great many things to get out of the scrape.

Q. Why didn't you go and tell them?

A. For the simple reason I didn't. I can't tell you why I didn't.

COUNSEL: That's what I want to know.

190 A. Well, sir, I knew that them lots in Chicago I wanted to get an injunction upon was in Marsh and La Fever's name. I didn't want to give him an opportunity to change that before I got them; that is one simple reason, if you like to know.

Q. Did you think that they had been deceived in the opinion, too?

A. No. I think they knew it—I think so.

Q. Did you think they had been deceiving you?

A. I did.

Q. In the scope of the opinion?

A. I did.

Q. You thought, then, they had been deceiving you?

A. I did.

Q. Who did you give that affidavit to that you swore to in this case that has been mentioned?

WITNESS: Is that the one?

COUNSEL: The one that these extracts are made from.

A. I don't know where or on what occasion. I don't understand exactly.

Q. This affidavit that is dated on the 20th of November, as stated in this article, that you said you read?

A. I don't remember.

Q. Where was it made?

A. I can tell you if I could see it; I could perhaps tell better about it.

Q. You remember making it, you said.

A. I don't know but I gave it to Mr. Brown. I don't know but I may have.

Q. Mr. Brown, one of your attorneys?

191 A. Yes, sir.

Q. Had he any authority to publish it?

A. I don't remember.

Q. Had he any authority from you to give it to Mr. Nichols?

A. He was acting for me, and I couldn't say; he was acting for me, and I couldn't tell you anything about it.

By Mr. PARKER: In connection with this deposition, at the time it was taken, there were some exhibits marked, one of which is this article in the paper and marked here; also copies of the original bill and the amendment to it in the case in Chicago, which in the deposition were shown to Mr. Scott and testified to by him as being correct. I wish to offer the whole thing together as parts of that deposition, parts of his testimony.

(Papers marked Exhibits "14 and 15.")

EDWIN C. NICHOLS, complainant's witness, recalled, further testified as follows, viz:

Cross-examination by Mr. PARKER:

Q. You testified in your cross-examination, Mr. Nichols, that you had caused extracts of portions of the affidavit made by Mr. Scott to be published. Is that article, "A Chapter of History," a copy of that purported article entitled "A Chapter of History?"

(Witness examines Exhibit No. 13.)

A. Yes, sir.

Q. Do you know where that affidavit is?

A. I do not.

Q. Where was it the last you saw it?

192 A. I had it at my office at one time. It may possibly be there now. I thought I sent it to Mr. Burton.

Q. Have you seen it since?

A. No; I don't now recall having seen it since.

Q. Did you cause the bill in this case that you filed to be published also?

A. No, sir; I did not.

By Mr. BURTON: I will state, Mr. Parker, that I have some papers in Detroit; I don't know that the affidavit is there; I don't know that it is; my impression is that I haven't got it; I haven't seen it for some time.

By Mr. PARKER: At the time Mr. Scott's testimony was taken you had it in Detroit?

By Mr. BURTON: I think I did at that time; it is barely possible it may be there now.

By Mr. BURTON: We offer in evidence the various exhibits that have been marked at our request.

JAMES SCOTT, complainant's witness, recalled further testifies as follows, viz:

Cross-examination by Mr. PARKER:

Q. Do you recollect, after this interview with Mr. La Fever, with Mr. Nichols, and Mr. Marsh in September, of having an interview with Mr. La Fever and Mr. Marsh out on Main street, in Battle Creek?

WITNESS: After what?

COUNSEL: In the evening, the next evening after this interview you had at Mr. Nichols' house, did you have an interview with Mr. Marsh or Mr. La Fever on Main street, in Battle Creek?

A. The boys came—Mr. Marsh and Mr. La Fever came — to my house Sunday evening; Monday night I was up to Mr.
193 Nichols'—I and Mr. Marsh; Tuesday I went to Chicago; I was there till Wednesday.

By the COURT:

Q. Then you would say that they did not? You were asked if on the evening after you were at Mr. Nichols'—that is, the next evening following—you had a talk with these boys. You say you were in Chicago?

A. Yes, sir.

Q. Did you have an interview with them in the evening after you came back from Chicago?

A. I think I did.

Q. Did you say anything to them about this admission that Marsh was said to have made?

A. I don't remember of anything; I didn't talk much.

Q. Did you tell them you had begun a suit in Chicago?

A. I don't think I did.

Q. Did you tell them anything about Judge Brown's opinion; that you had been deceived in it?

A. I don't think I did.

Q. Didn't say anything about any of these things?

(No verbal answer.)

By Mr. BURTON: I now offer in evidence the exhibits that we have produced: "Exhibit 1," letter of July 15th, 1879, from Marsh to E. C. Nichols; "Exhibit 2," letter of July 12, 1879; "Exhibit 3," letter of February 6th, 1880, from Marsh to E. C. Nichols; "Exhibit 4," letter of April 21st, 1880, from Marsh to E. C. Nichols; "Exhibit 5," printed specifications and drawings No. 236,052; "Ex-

hibit No. 6," printed specifications and drawings of patent
194 No. 308,567; "Exhibit No. 7," notice, dated February 11th, 1881, from Marsh and La Fever, to Nichols, Shepard & Company; "Exhibit No. 8," blank form of license with interlineations filled out, but not signed, entitled "License, with royalty, for Marsh & La Fever's patent valve gear;" "Exhibit No. 10," Miles' affidavit.

By Mr. BURTON: I will offer the roll certified from the United States court of the bill of complaint, the plea, demurrer, and discontinuance. I think it comprises all the papers, the subpœna, &c., in the case of Elon A. Marsh, Minard La Fever, and James Scott against Nichols, Shepard and Company, Edwin C. Nichols, John Nichols, and David Shepard, who are put in with their official titles, being a case commenced May 3rd, 1883.

(Said document marked "Exhibit 16.")

By Mr. BURTON: I also offer in evidence a file wrapper containing the Marsh application, being a certified enrollment from the Patent Office, stating what is in there.

(Said document marked "Exhibit 17.")

By Mr. BURTON: I will also offer the proceedings in the first case of Marsh, La Fever, and Scott against Nichols, Shepard & Co., including bill of complaint, answer, replication, order granting leave to file amended answer, replication to amended answer, motion to strike Exhibit "A" from files—I don't care for that—second amendment to answer, minutes of hearing, and the proceedings allowing bill & cross-bill, and the decree is here also. No opinion was filed.

(Said document marked "Exhibit 18.")

By Mr. BURTON: I will also offer a certified copy of the bill which was filed in the third case. That case is still pending.

195 (Said document marked "Exhibit 19.")

Mr. BURTON: I offer the depositions of Mr. Ellsworth and Mr. Bradley and offer to show that they are out of the city.

EDWIN C. NICHOLS recalled:

I know Mr. Bradley. I do not know where he is to-day. He is not in the State of Michigan, I suppose at least. He is in complainant's employ, and if he is attending to his duty he is in Wisconsin. Mr. Ellsworth is in Illinois; on the 26th of May was in Illinois, and Bradley was in Texas. I brought them both for the purpose of testifying, and retained them about ten days. I finally felt obliged to send them away again, and for that reason instructed that their depositions be taken.

By Mr. BURTON: I now offer the depositions.

By Mr. PARKER: I object on the ground that the depositions were taken solely, as stated in the notice, for the reason that they were about to leave the State of Michigan and could not attend on the trial of the cause, whereas it appears that they are in the employ of the complainant and subject to its control. Notice having been

given heretofore of the taking of testimony in open court, the complainant cannot deprive the defendants of that privilege when *he* has control of the witnesses.

By the COURT: The depositions may be admitted as a matter of course.

Mr. BURTON: I now offer the depositions taken in Indiana. I understand they are admitted without objection.

By Mr. PARKER: I have no formal objection to them.

196 By Mr. BURTON: That is our case.

Complainant rests.

Defense.

ELON A. MARSH, sworn on the part of the defendants, testified as follows:

I reside in Battle Creek, Michigan; am one of the defendants in this case. I know Mr. E. C. Nichols; have known him since '79, and have been acquainted with the business and shop of the complainant about the same length of time; have worked for them. I know about this reverse gear. I invented it. I first called Nichols' attention to it about Feb. 1st, 1880, by letter. Exhibit "3" is the letter. I received a written reply. I saw him the following day at his office, showed him a drawing of the device, and explained as fully as I could its prospective scope. Mr. Hoag, the mechanical superintendent, was present. I have heard Nichols' testimony. I don't think much was said with reference to using the device or trying it. Both Nichols and Hoag seemed to think it wouldn't work; at all events, wouldn't be a satisfactory device to use; thought there was nothing in it. I afterwards placed the device on an engine I fitted up at the shops of the Battle Creek Machinery Co.; took it to the room of the society in the Eldred block, in that city. I then saw Mr. Nichols about it. He came and examined this engine while I had it steamed up. He expressed some surprise that it should work so nicely; operated it; tested it a little. It was on a small engine. He thought perhaps while it might do well on a little engine it would not be of any account on a large engine, and rather
197 sought to discourage any further experiment with it. He advised me not to spend time and money on it. He thought that so simple a device must be old. I think I told him at that time about an application for a patent. I don't think much was said about complainant's using it. There might have been something, but the result of Mr. Nichols' examination didn't warrant any negotiation. Mr. Hoag saw the device afterwards, in July, '80. I didn't have any more talks with Nichols until the latter part of August, about the 26th or 27th; that was at his office. I think Hoag was present on that occasion.

Q. What, if anything, was said with reference of applying it to one of their engines?

A. I solicited the application of the device to their engine, and Mr. Hoag was also desirous of having it applied. Mr. Nichols was rather disinclined; thought he couldn't allow the application; didn't

think they would want to use it in any event; rather refused, but told me to come up again in a day or two. I don't think this interview lasted over half an hour.

Q. What proposition, if any, was made?

A. I don't think there was any proposition of any kind made at that time.

Q. What was said by Nichols, if anything, with reference to their not experimenting as to the policy of the company?

A. He expressed himself, either at that time or the day after, that they didn't like to do that sort of thing; that they were in the habit of adopting devices of known merit; rather preferred to wait until other people had tested it and then adopt it.

198 I think I went back the following day, or it is my impression that that interview was on Saturday and I went back Monday.

Mr. Nichols finally permitted me to put the device on. I don't remember who was present. I think we walked out in the yard together and looked at the engine before he gave his permission finally. I think we were alone.

Q. On what terms was that permission granted?

A. It was agreed if I would put the device on myself, at my own expense, and not mutilate the engine or deter it from going to the fair that I might do so.

Q. Was there anything said about Nichols being willing, but he didn't think that his folks would consent to it?

A. Yes. The day before he thought that his folks wouldn't like to have it put on; thought they would object, but that he would see them and let me know when I came up again—that is, the other members of the company.

Q. What was said, if anything, about any price to be paid for its use in case of a success?

A. There was something said about that, and I told Mr. Nichols that the price wouldn't be so steep that he couldn't afford to use it, and he spoke up, with some warmth, that they were able to pay for it; they were probably able to pay for it, whatever the price would be, if they chose to use it.

Q. What was said, if anything, or what condition was made, with reference to putting the engine back in its original condition?

A. Well, I agreed to do that, to put it back in its original condition, if they chose to have me.

199 Q. Where were you to do the work?

A. At their factory.

Q. What was said, if anything, with reference to the future use of the device by them?

A. There was nothing said at that particular time, to my recollection now.

Q. Was there any agreement made about any future use?

A. No, sir.

Q. What agreement, if any, was made as to what should be paid for the future use, if any?

A. There was no talk about future use. The idea Mr. Nichols

seemed to have — that they wouldn't want to use it, anyway; that they were merely allowing me to put it on as a favor to me.

Q. You heard Mr. Nichols' testimony with reference to the agreement he says you made with him?

A. I did.

Q. What do you say with reference to that agreement?

A. I have no recollection of any such agreement ever being made.

Q. What do you say now? Was there or was there not such an agreement?

A. There was not.

Q. At any time during the progress of putting it on was there anything further said with reference to any future use?

A. No; not during the application of the device.

Q. What did you do after this permission was granted with reference to it?

A. I went on and made the patterns—made the drawings first and then the patterns—and got them cast there at the foundry
200 and done the most of the fitting of it myself and applied it myself, stripping the engine to put this device on.

Q. In the placing of the device on the engine what was done with reference to the adjustable abutment or stop against which the arm should rest?

A. Well, the device was applied with an adjustable stop at the outset, but the manner in which it was applied wasn't fully satisfactory. I wish to correct myself there. When I first put the device on there wasn't any stop. I left the stop off. The quadrant at the engineer's end of the engine held the device in place, but after I had made one trial, owing to another weak reach rod, the device was unsatisfactory, and I then put on a stop with an adjustable set-screw in it; it operated satisfactorily after that.

Q. Will you state in detail what you did in putting on that stop?

A. Well, I made a sketch with a piece of chalk on the shop floor, and then had a blacksmith make the forging.

Q. Who was the blacksmith?

A. The blacksmith was Michael Rainbow. After the stop was forged I drilled the holes in it, and with the assistance of one of their workmen——

Q. Who was that?

A. John Henry; and finally applied the stop plate to the boiler, in connection with this device.

Q. Was that stop included in the description of your invention in the original application?

A. No; it was not.

Q. Application had been made before this, then? Did you afterwards make a claim for an application for a patent upon it?
201 A. I did.

Q. With what result at first?

A. Well, we got an interference with the——

Q. Was it refused?

A. It was refused.

Q. Why?

A. Because it interfered with the claim of one Andrew J. Hoag, the superintendent of Nichols, Shepard & Co.

In this interference testimony was taken, and it was finally decided in our favor. I think likely I was much as eight or ten days from the time I commenced making the patterns until I had the device on the engine ready to run successfully. The last day was the 8th of September. That engine was taken up for exhibition purposes; sent to the Springfield and Illinois fairs; from there it went to St. Louis, at the St. Louis fair; from there it went to Bellevue, Illinois, fair; from there back to Battle Creek. I don't know what finally became of it.

Q. What, if anything, was said between you and Nichols while it was being placed on the engine about any use of the device by complainant?

A. All of our talks about the use of the device was after it was applied. During the application I was very busy and don't know that I saw Nichols more than once, and then not to have any conversation with him.

I presume likely Nichols went with me to see Hoag and told Hoag to furnish me with whatever was necessary. Members of the firm got interested in the device after I got it put on the boiler. Hoag was especially so because he wanted a reversing device. I think Mr. Nichols was interested also.

202 They were not using the link device, but a form which reverses a gearing of the engine without reversing the motion of the engine, a sort of interchangeable gear which necessitated stopping the engine, and then they could reverse it by the shifting of one gear-wheel over into another. It necessitated a stoppage in order to do it.

Outside of my own work there wasn't very much labor done. Possibly there might have been three days' work by one man. I think that was by a pattern-maker, McKinney. He made a pattern for a gear-wheel; must have spent half a day, but I don't recollect distinctly.

By the COURT: State what you did. We don't care to have you describe at length what each man did. What, in your judgment, was the three days' work worth—the value of it?

A. The value of that three days' work wouldn't exceed eight dollars.

Q. What were those castings worth?

A. Well, I think there was about 35 or 40 pounds of castings; worth maybe two dollars, at the outside.

Q. What was done to the engine in order to change it from one device to the other?

A. Nothing but slipping off the eccentric on the engine as it was and punching four holes in the boiler and attaching my device in the place of the eccentric that was taken off. The steam-chest was chipped out a little, which I did.

It necessitated a longer steam-chest. It did not spoil that one,

because we used it three or four weeks without any bad results
203 whatever. No change was made or injury done to the shaft or eccentric or old machinery to hinder replacing it. I am machinist by occupation; have worked at pattern making and mechanical drafting for about 14 years. I am well acquainted with steam-engineering and construction of boilers, &c. I don't think the holes would do the boilers an injury; there would be no particular effect. I was not paid anything as wages or expenses during the time. There was nothing said about my going with the engine anywhere while I was putting on the device. The first time anything was said about that was after the engine had been successfully tried. Nichols came to me and wanted to know if I had any objection to letting that device go to the fair with the engine. I told him I would think about it and see. I didn't know I would have any objection. He says, "If you will permit it to go I would like to have you do it very much. It would be an attraction for the engine. I will pay you the same wages I pay my other men, and, in fact, let you take the place of one of my other men." And after a little consideration I consented to do so. He said he would give me two dollars a day and expenses. For expenses I got $50 at the office, which wasn't enough, and I borrowed seven dollars of Bradley; total, $57.

That was not enough; it lacked several dollars of what I paid out. I paid out other expenses while I was gone. In addition to my railroad fare and hotel bill I must have paid ten or twelve dollars for repairs and labor on the fair ground and the toll of going there on the river bridge; several items, I don't remember what they all were.

204 The engine was shipped to the fair on the 18th of September, ten days after the trial. I recollect seeing Nichols on or about the 18th with reference to the complainant taking an interest in the matter. The day before this interview he asked me what I proposed to do with it. I told him I had an idea of introducing it to the trade after I got my patent. I told him the condition the patent was in. He made some remark about the difficulty of getting a patent; he mentioned his pool that he is connected with, and said he didn't want anything to do with the device personally. That evening I got to thinking it over, and thought, perhaps, he had some idea of making me a proposition and didn't know just how to get at it, and so the next day I asked him in plain terms if he had any such thing in his mind, and he said no, that he hadn't; wanted me to distinctly understand that if he ever wanted to use that device, which was doubtful, that he would use it anyway, whether I had any claim on it or not in the way of a patent.

By Mr. HILL:

Q. When was this?
A. This was on the 18th of September.

By Mr. HILL:

Q. Before it went to the fair?

A. I think the engine went that same day. I know I went on the 19th, and I think the engine went the day before. I know Samuel J. Bradley; his and Mr. Ellsworth's testimony was taken at Detroit in my presence.

Q. You heard Bradley testify about its being common talk that Nichols, Shepard & Company was going to use this device. What do you say as to that?

A. I can say that it is not true. I never made any such statement as he accredits me of making. I did not state to third
205 parties on that occasion, in his presence or out of his presence, that complainant had made any arrangement for the use of it, nor did I ever make any such representation.

After Mr. Ellsworth's testimony as to praising up the device quite likely that is true. I never lost a good opportunity to speak a good word for it.

There was some difficulty about it between Bradley and myself, and we haven't been on speaking terms since the St. Louis fair, four years ago. We were never very intimate; in fact, I saw very little of him until those fairs; had some difficulty with him during the fair. The way it arose—the first thing he done when he went to Springfield was to give me orders to wipe the engine up, oil it, build up the fire, and get the things ready for business, while he sat down on boxes and smoked a cigar. I knew it was his business, so I didn't agree to do it. I told him I would help him do it. It started from that. At St. Louis we disagreed about the running of the engine. He told me he would knock me down. I concluded I would go home. Mr. Ellsworth smoothed the matter over and I didn't.

Q. Who had charge of the party?

A. Mr. Ellsworth.

Q. Have any trouble with him?

A. No, sir.

Q. Did Mr. Bradley have charge of it in any shape?

A. Not any more than is usual as helper.

I had an interview with Hoag just before I went to the fair or just before I came back. My impression is it was right away after I came back. It was in regard to what I intended to do with the device. He thought it a pretty good thing, and said I ought to see Ed. Nichols and make some arrangement with him whereby Ed. could handle it for me—make some money out of it. I told him I had previously sold a half interest to Mr. La Fever, and while it was too late to make Nichols any offer of an interest, yet we
206 hoped to do some business with him in the way of using it on their engines. He thought if La Fever had an interest in it that was the end of it. I also saw Hoag with reference to this matter after he had obtained his patent—the one that was afterwards an interference; that was at Gogonac Lake. I met him on the deck of a little steamer I was running, and he said that he had——

Mr. BURTON: We object to what he said.

WITNESS: He said that he had obtained a patent on that device, and wanted to know what we could do about it. He thought we had better sell the other half to Ed. Nichols; said he had assigned his patent to him.

After I came back from the fair we had some interviews with Mr. Nichols in November. I think that La Fever and I met Nichols at his residence in Battle Creek on the evening of November 7th. He met me at the shop one evening and requested me to come up to the house. He said that he wanted to talk about the invention.

I told him La Fever was an interested party, and if he wanted to talk about that device it would be proper to invite Mr. La Fever. He says, "All right." We went up the next evening to his residence. Mr. Nichols commenced in a general way to talk about the invention, and he inquired what success, if any, had attended our efforts. He told us some of the difficulties he had met with or some difficulties some other men had met with in introducing inventions, and advised us not to put all our hard-earned money in the invention; thought we would sink it. He seemed to take, at least said so, a friendly interest in my affairs, and that was the object of
207 meeting. He didn't care to use the device, and, as he expressed it, wouldn't give a snap of his finger for it; wouldn't go across the road to own it. That, I believe, is the substance of the interview.

Q. Do you remember his saying anything about whether he could make or break that patent if you obtained one?

A. Yes. He spoke about his pool that kept an attorney at Washington, and he told us that he could make or break the patent at his will.

Q. Anything said about any use of it by complainant?

A. He said that they didn't. Nichols, Shepard & Co. wouldn't use it; didn't want to use it. We talked with him about that.

Q. What was said, if anything, about their having a right to use it if they wanted to?

A. Nothing.

Q. Anything said about any agreement they had made to use it?

A. No, sir.

I recollect meeting him later in the month and telling him about having received notice of the allowance of the patent, and thought it would be good news for him. He seemed to take so much interest in it. He said he knew it; knew it before I did, but said it would be a straw patent; wouldn't be of any account.

After the patent was allowed and before it issued I went among the manufacturers introducing it. I went to the works of Gaar, Scott & Company; applied it to one of their engines; they took out a license. From that we took and made application of the device to several other engines; took licenses, many firms. I never
208 did as much in the way of work in applying the device in any other place as I did at the work at complainant's. These manufacturers have always freely accorded me every facility, all the material I desired and such as I desired, and men to do the work.

Q. What representations, if any, did you make to those licensees that Nichols, Shepard & Co. were using it or going to use it?

A. I told them on the start that Nichols, Shepard & Co. were using it, and they admitted that they had been using it against our protest.

Q. What did you say to Mr. Lamb, whose testimony was taken, with reference to their use of the device?

A. Well, I presume I told him that Nichols, Shepard & Company were trying to steal it, and that they were using it; said substantially the same to William D. Scott.

Q. Do you know whether or not they signed the licenses because complainant was using it or because it was proven to be a good thing?

Objected to.

A. They signed the license because they thought they were going to use it; they liked it upon trial, and thought I had a big thing. They advised me to set a certain figure for the license. I think they were the first ones to sign one. They were in every way friendly. I don't think the position which complainant took had anything to do with them.

I came back from that trip; I think I was home New Year's Day, and stayed one or two days. Then I went back; didn't get home again until early in February. I was not in Battle Creek at
209 all during January, and did not see Mr. Converse in January. I heard his testimony with reference to a statement with him. I did not make any statement to him in January with reference to any license or agreement with Mr. Nichols or complainant to use this device. I first became acquainted with him the fall of 1880. I met him September 18th or 20th, along there somewheres, and don't remember meeting him again until the following March of '81. The occasion of first meeting him was that La Fever was acquainted with him, and he had Converse draw the agreement between him and me of the transfer of the interest in this invention.

Q. Did you ever state to him that Nichols, Shepard & Company had made an arrangement with you by which they were to have the use of this device?

A. No, sir.

Q. Did you ever state to him any agreement, that there was any agreement of any kind by which they were to have the use of it?

A. No, sir.

Q. Did you ever state to him that the understanding was that they were to use this device, but that Nichols had treated you shabbily and now they must pay for it?

A. No, sir; I never told him anything of the kind.

Q. Did you have any conversation with him at any time from which it could be implied any such statement or that any such arrangement existed that you know of?

A. I don't think I ever had such a conversation. No, sir.
210 Q. What were your relations with Mr. Converse subsequent to your first meeting, in March, '81, whether that of attorney and client?

A. I think he acted for us in that capacity. I was away most of the time. I think he did some business for us through La Fever in my absence.

I was informed by La Fever on my return about a notice being drafted and sent to complainant.

Q. Did you sign the notice?

A. I see there is some misapprehension here. There were two notices served on complainant. The one that you refer —, I think, was served prior to this one. This one I served myself. All the knowledge I have of the other was information from La Fever. Subsequently the notice marked "Exhibit 7" was served by myself. This is my signature: "Marsh & La Fever, by E. A. Marsh." I am not certain whether I saw Converse with reference to this notice. I am not certain who drew it. I think it is in Converse's handwriting, but don't know. It isn't mine. I went up to the office to serve this paper on E. C. Nichols, but not finding him in I left it with the head clerk, Franklin T. Roberts. I think I explained the nature of it to him; did not know whether it came to Mr. Nichols' knowledge until to-day.

Q. Had you seen Mr. Nichols before the service of that notice, Exhibit "7?"

A. Yes; I think I saw Mr. Nichols about that time. I guess it was the sixth of February, 1881. I think I had just returned from Indianapolis, where I had been applying a device, and he asked me what success I had met with and I told him, and he then wanted to know if those parties had taken out a license,
211 and I told him they had, and he seemed to be glad and interested; thought he would like to take out a license and be as friendly, at least, as other people. He wanted to know if I had one of the contracts with me. I told him I hadn't one with me, and he said he would like to see one. I agreed to bring one up to his office. A day or two later, on my way to the office with a blank partially filled out, I met him, and he changed the place of meeting to his house the following evening, and I met him there.

Q. I now show you Exhibit "8," and ask you if that is the form of license you filled out and took on that occasion.

(Witness examines "Exhibit No. 8.")

A. It is.

Q. You heard his testimony that that license and the notice were brought by you to him together?

A. Yes, sir.

Q. Was that true?

A. It was not true.

Q. Will you go and state what occurred when you took that paper to him? I understood you to say you went to his residence the next evening.

A. Yes, sir. I went to his residence with this paper and another blank filled out the same as that, expecting that he would sign.

Q. Thinking to have them signed in duplicate?

A. Yes, sir; we always have them signed in duplicate. I let him

take this one; he looked it over and wanted to know if anybody had signed a license of that description. I told him they had—there had been several parties; and he said that he wouldn't sign such a document, and then he wanted to know how much I was go-
212 ing to charge him for the use of the device. I told him we proposed to charge him just the same and no more than any one else. He said he would never give us a cent; took the license, folded it up, put it in his pocket.

Q. You have never seen it since until to-day?

A. I never saw it until to-day since.

Q. Was there anything said by you on that occasion in relation to discontinuing the use of it?

A. Yes, sir; I warned him then if he didn't intend to pay for it to stop using it at once, because we would not tolerate an infringement.

Q. What next?

A. He said if we wanted to fight Nichols, Shepard & Company, or "buck it" rather, as he expressed it, that we might fire ahead; we would find out that they had more money than we had, that a lawsuit was no laughing matter, or words to that effect.

Q. What next occurred with reference to this matter?

A. The service of this notice.

Q. What claim did he make, if any, with reference to the right to use the device at the time you took the license papers?

A. He didn't make any claim at that time.

Q. Do you recollect an interview with him at the First National Bank in Battle Creek in the early spring of 1881—some time thereabouts?

A. I do.

Q. Was that before or after this license paper had been taken to him?

A. That was after, I think.

Q. How did that interview come about?

213 A. Well, he called on Mr. La Fever at Merritt's shop and requested an interview with us. He said he had some papers to show us that interested us and set a time to meet him at the City Bank.

Q. Then what occurred at that interview?

A. Well, he showed us some copies of patents which he thought were anticipations of our device, and he also showed us an opinion from an attorney, which he claimed he gave a hundred dollars for.

Q. Did he claim that then?

A. Yes, sir.

Q. Do you remember the man's name?

A. Well, he didn't tell me the man's name. He said that an attorney in Washington had furnished him an opinion for which he gave a hundred dollars. He carried that opinion and he read some extracts from it that our patent was wholly anticipated, of no force; he had called the meeting, he said, to show us where we stood, and he wanted to know if we couldn't drop or compromise in some way whereby he was to have a shop right and we make all we could out

of the invention. He said that he had twenty-five thousand dollars which he would put into the suit if we chose to fight it, but he preferred to take a shop right and let the matter drop. That was, I believe, the substance and the meaning of what he said.

Q. What, if anything, was said about you having made any arrangement with him by which they were to have a shop right?

A. Not anything.

Q. What did you say in response to this statement?

214 A. Well, we told him that the most of these patents which he had showed us, we had already copies of them or some of them had been cited as anticipations by the office in their preliminary examination; and as for the opinion—his attorney's opinion—we didn't happen to take much stock in that, because we had an opinion from another attorney, who said that we would win the case.

Q. When did you first employ Converse, so far as you know, before or after that interview mentioned?

WITNESS: That is, the interview I am speaking of now?

COUNSEL: Yes.

A. Well, it was after that.

Q. Had Mr. Scott obtained an interest in it at the time of the interview?

A. I think he had.

Q. Have you any means of fixing the date of that?

A. Yes, sir; I think I can. I haven't the means here; for that reason I can't tell so well now.

Q. Did you keep a memorandum of these interviews?

A. Yes, sir.

Q. Of what you were doing at that time?

A. Yes, sir.

Q. Where is that book now?

A. I haven't got the memorandum book, but I have made notes from time to time, either on a scrap of paper or in some way, so that I can fix those dates, nearly all of them.

Q. Did you send Mr. Converse to see Mr. Nichols early in April some time?

215 A. Yes, sir; I think I did, in connection with Mr. La Fever and Mr. Scott.

Q. What statement did he make after having returned? Did he put it in writing after his return?

A. After his return from that interview he told us substantially what had occurred. We thought it would be a good thing to have a record and requested him to put it in writing, and he wrote it on a scratch book, tore the sheets off, and gave them to us.

Q. Did he state to you on his return that Mr. Nichols claimed that you had made an arrangement whereby they were to have the right to use the device on their engines free?

A. No, sir; he did not.

Q. Did he say anything of that kind as a part of the conversation or as a part of the statement Mr. Nichols made?

A. No, sir; he did not in my hearing.

Q. Did he state orally anything more or different from what he wrote on the scratch book?

A. No, sir.

Q. I now show you "Exhibit 11." What is that paper?

(Witness examines "Exhibit No. 11.")

A. That is the paper he gave us at that time.

Q. The first portion of it?

A. Yes, sir.

Q. There is another portion there dated later. I will come to that in a moment. Was there any response made by Mr. Nichols to that interview?

A. None that I know of.

Q. Do you know whether or not Mr. Converse had a second interview with Mr. Nichols as your attorney?

216 A. Yes, sir; he so informed us, that Mr. Nichols called at his office, something like two weeks after that, and spoke about some correspondence he was having with other manufacturers, and he also put that in writing, the substance of his interview.

Q. Did he state that Mr. Nichols said anything to him about any arrangement or agreement or understanding whereby they were to have the right to use the device?

A. No, sir.

Q. Did he state anything different from what he put in writing?

A. No, sir.

Q. Well, now, at the second interview on that paper state what he did.

A. Well—that is, I have given it as the substance of the second interview, of which I have spoken.

Q. What did he say Mr. Nichols said with reference to you and Nichols, Shepard & Co. working the invention together?

A. Well, he said that Mr. Nichols was very indignant to think that we wouldn't recognize his right after telling us how to handle that device, and stated that Nichols wanted the right to use it free of cost, and if we would give it to him why he would allow us to own the rest of it, or words to that effect.

Q. You subsequently brought a suit in Detroit?

A. Yes, sir.

Q. Do you remember about the date of that?

A. I think we filed our bill on the 8th of June, '81.

Q. Did you have, during this time and before the filing of that bill, any interviews with Mr. Scott in the matter—you three together?

217 A. Yes, sir.

Q. You heard Mr. Scott's testimony this morning that when he bought into the patent he had no knowledge of that notice, Exhibit "7," did you?

A. Yes, sir.

Q. What is the truth about that?

A. My impression is that he knew about it; I am quite certain he did.

Q. You heard him state that you and Mr. La Fever told him that Nichols, Shepard & Company were going to use this invention. Did you so tell him?

A. I don't think I did; no, sir.

Q. Was there anything said about Nichols, Shepard & Co. having the right to use it?

A. No.

Q. Or having made any arrangement to use it?

A. No, sir.

Q. Was there anything said about their using it—they were using it?

A. I presume likely there was, from the fact that they were using it, and I know we thoroughly informed Mr. Scott of the attitude of Nichols, Shepard and Company, and that probably they were going to use it, and that they were using it.

Q. Did he know or did you inform him that they claimed the right to use it—that they claimed the use of it regardless of——

A. No; I don't know as they claimed to use it at that time—that is, claimed the right to use it.

Q. You spoke of their attitude in regard to using it at that time, and that Mr. Scott was informed of the attitude. What do you mean by attitude? What position they took? What was the understanding of the position Nichols, Shepard & Co. took?

218 A. That they were trying to appropriate it without recompense. That was fully understood by Mr. Scott and by us.

Q. After that bill was filed and some time in the early part of '82 did you have another interview with Mr. Nichols at Converse's office?

A. Yes, sir.

Q. Who were present?

A. Mr. Scott, Mr. La Fever, and Mr. Converse.

Q. What, if anything, was said on that occasion relative to this device and the controversy between you?

A. Mr. Nichols brought up the question of the signature, stating——

Q. Signature of the patent?

A. Signature of the patent. He says, "You are now where I thought, which I have known for some time;" and he went on and stated that the defect was fatal, but that it could be fixed up without becoming generally known. He thought it would be a good opportunity to settle the matter up by giving him a shop right.

Q. What was said, if anything, relative to the patent they had obtained from Hoag?

A. He spoke about that, and offered to pool with our patent. I believe he offered that as one of the considerations for a shop right.

Q. That is, offered it to you?

A. Yes, sir.

By the COURT:

Q. To settle up the suit in Detroit?

A. Yes, sir; the infringement suit. I presume the interference suit, too.

219 By Mr. PARKER:

Q. Was the interference suit in progress at that time?
A. Yes.

By the COURT:

Q. What time was this?
A. In the spring of 1882; it was instituted in the fall of 1881.
Q. Say anything about having the dead wood on you?
A. Yes.
Q. What did he say with reference to that?
A. Well, that was the expression; that he had dead wood on us; that he had us in a place now where he could do just about as he had a mind to in regard to the title or destruction of the patent unless we acquiesced in his scheme.
Q. You heard Mr. Converse's testimony about Mr. Nichols claiming on that occasion that they had the right, or, rather, that Nichols, Shepard & Company had the right originally to use this?
A. Yes.
Q. What can you say in reference to that?
A. I didn't hear Mr. Nichols make any such remark at that time.
Q. If he had made it would you have heard it?
A. I think I would; yes, sir.
Q. Was there any such claim made to your knowledge on that occasion?
A. No, sir; not up to that time.
Q. When did you first hear any claim of that kind, Mr. Marsh?
A. Well, I can't remember just at present, but it was within the last two years that I first heard of that. I don't think I ever heard that claim made by any one until within the last two years, anyway.

220 Q. You heard M. Scott's testimony about that interview that occurred at Mr. Nichols' house in September, 1883?
A. Yes, sir.
Q. Had you heard of any such claim before that interview?
A. Yes, sir; I had.
Q. How did you hear of it?
A. Mr. Metcalf was the first man that told me. He said that Mr. Nichols was circulating that report among the citizens of Battle Creek, and had claimed to several that Mr. Marsh actually gave him a shop right. That was my first knowledge, and it must have been not more than two or three months before that interview at the house that Mr. Scott——
Q. You heard Mr. Scott say how that interview came about?
A. Yes, sir.
Q. Will you state what you know about it?
A. Yes; I went down to the State fair at Detroit in the fall of '83, and while there I met Mr. Parker, my counsel, and Mr. Burton, counsel for Nichols, Shepard & Company. In the general conversation it developed that Mr. Nichols had been down to Detroit, and

had felt a desire to have the case settled up, and those attorneys that I speak of advised us or some one of us to go and see Mr. Nichols. When I got back home I told Mr. Scott and La Fever what I had heard at Detroit, and it was decided by all three of us that one of us or two go up and see Mr. Nichols. We first requested Mr. Scott to go, but he said he didn't want to come in contact with the
221 villain under any circumstances. It was a foregone conclusion with Mr. La Fever, so, as usual, I was selected to go, and the next evening I went up to Mr. Nichols' house, and his daughter came to the door and said Mr. Nichols was engaged, but I might walk right in. She opened the library door. As I stepped up Mr. Nichols and Mr. Scott were having a sort of tete-a-tete together and their heads, perhaps, two or three inches apart, going into the matter pretty fully. They were both surprised, and I was, too. Mr. Nichols——

Q. Will you state whether you heard anything that they said as you went in?

A. No; I didn't hear anything that they were talking about. Mr. Nichols spoke up and said they were talking about our case, and, as it was a matter that all three of us were interested in, I had better take a seat and sit down and talk it over. Well, I was rather inclined to withdraw, seeing Mr. Scott there. I thought he had changed his mind and had concluded to talk with Mr. Nichols about it himself. I did stay, and we talked it over; finally came away without making any arrangement.

Q. What proposition, if any, was made?

A. The only proposition that was made was one that Mr. Scott made. He agreed to take ten thousand dollars for a shop right.

Q. What became of that; what was done?

A. Mr. Nichols said he wouldn't entertain that proposition.

Q. How long did that interview last?

A. Well, I think it must have lasted an hour and a half.

Q. What was said, if anything, with reference to the interference case in Washington?

222 A. Mr. Nichols offered to bet me ten thousand dollars against one that he would win it—his folks.

Q. Was he bluffing generally or appeared to be?

A. I thought perhaps he might have been.

Q. You heard Mr. Nichols' testimony with reference to his claim of a right?

A. Yes, sir.

Q. On the part of Nichols, Shepard and Company?

A. Yes, sir.

Q. You heard Mr. Scott's testimony?

A. Yes, sir.

Q. Will you state what there was to that?

A. I didn't know anything about it until afterwards. The first I knew of it was I noticed it there in the paper containing an extract from Mr. Scott's affidavit.

Q. Was there anything of that kind on that occasion?

A. Nothing of that kind was said by me.

Q. Did Mr. Nichols make any claim on that occasion that you had given Nichols, Shepard & Company a shop right?

A. Yes, sir; he did claim it at that time and for the first time to me.

Q. Was that the first time you had ever heard him make the claim?

A. It was; yes, sir.

Q. What did he say with reference to that claim?

A. Well, he said substantially, I think, what he said here to-day—that I had promised it to him.

Q. That you promised him a shop right?

A. That I promised him a shop right; yes, sir.

223 Q. What was said with reference to your putting it in writing?

A. Nothing whatever. I merely denied it. Well, the way the matter came about, he told this to Mr. Scott; he did not tell it to me. Mr. Scott said that he heard of it before, and he says, "Elon denies it."

Q. That was you?

A. Yes; and he turned around; says he, "Don't you deny it?" "Why," I says, "certainly I do. Mr. Nichols knows better; of course I deny it." That was all I remember being said on the subject; we came away then.

Q. What did Mr. Scott say to you afterwards about that?

A. He thought it was a lie; that is what he told me as we walked down together.

Q. You spoke about seeing a statement of Scott's affidavit in the paper about your making an admission?

A. Yes, sir.

Q. Is that a copy of the articles there?

(Witness examines "Exhibit No. 13.")

A. Yes, sir; that is the copy which I saw.

Q. That, you say, was the first time that it was claimed you made that statement that you know of?

A. Yes, sir; that is the first time that Mr. Nichols claimed it in my hearing.

Q. The first time you heard of the admission?

A. Yes, sir; the admission.

Q. Did you have an interview with Mr. Scott shortly after that?

A. Yes, sir.

Q. That evening?

224 A. We walked down to the city together from Mr. Nichols' house?

Q. Did you and Mr. La Fever have an interview with Mr. Scott two or three days afterwards?

A. Yes, sir.

Q. Was anything said about your making this admission?

A. No, sir.

By the COURT: Are you undertaking to prove the statement of codefendants?

By Mr. PARKER: With reference to Mr. Scott's testimony about the interview.

Q. In that interview did Mr. Scott say anything about your having made any such admission?

A. No, sir.

Q. Was there anything said about the claim of Mr. Nichols that you had given them a shop right—was that matter referred to?

A. Yes. Mr. Scott brought that up. He was telling La Fever what Mr. Nichols claimed, and he didn't seem to attach much importance to Mr. Nichols' claim.

Q. Did he say anything about having brought a suit rescinding the sale on that occasion?

A. No, sir.

By Mr. PARKER: I want to reserve the right until to-morrow for a memorandum that Mr. Marsh couldn't find to put such questions as may be necessary at that time. I don't think of anything I want to ask further.

Cross-examination by Mr. BURTON:

Q. How long have you been living in Battle Creek?

225 A. About fourteen years.

Q. When were you first employed by Nichols, Shepard & Company?

A. I was first employed by them, I think, in the fall of '78.

Q. How long did you continue in their employ?

A. Not very long. I think only just during the winter.

Q. Then were you employed again in '79?

A. Yes, sir.

Q. Whereabouts were you employed at that time?

A. I was employed as a road hand at that time.

Q. How long did that employment continue?

A. About three months.

Q. Then did you go into their employ after that?

A. Then I went into shop-work until the latter part of December, I think; only five or six months.

Q. What were your relations with Mr. Nichols during that time?

A. I hadn't any except that he employed me to go on the road. While I was on the road I was under his orders.

Q. Were your relations with him pleasant or otherwise?

A. Well, they were pleasant most of the time.

Q. Have any disagreements with him?

A. No; nothing of a serious nature.

Q. Did you have any disagreement with other members of the company?

A. Yes; I did.

Q. Did Mr. Nichols rather take your part in the disagreements with the other members?

226 A. No, sir; not that I know of.

Q. The old gentleman, John Nichols, rather objected to your working there, didn't he?

A. Not that I know of.

Q. Wasn't you sent out on the road as a road hand rather as a matter of favor because Mr. Nichols wanted to employ you and John Nichols objected to your being employed around in the vicinity where he was?

A. I couldn't state. I don't know anything about it. I never had any such suspicion as that.

Q. When did you make this invention—this reversing gear?

A. Well, sir, I first made this invention on the 25th day of December, 1879, on Christmas Day.

Q. What did the invention consist of?

A. Well, it consisted of two gears of equal diameter, one mounted on the main engine shaft and the other in the lever fulcrum around such shaft, carrying a wrist pin, to which a valve rod was connected, and provided with * * * for shifting this movable wheel in its bearing either on one side or the other of a line drawn from the center of the shaft—the reciprocation of the valve—for the purpose of reversing the movement of the engine.

Q. Is that all?

A. Well, that, with the various facilities for its operation. The scheme I had in my head at the time that it should be a device——

Q. Was that all the invention?

A. In its detail I carried it further. I provided means for stopping the reversing arm at a certain necessary point—fixed point or adjustment.

227 Q. When did you make that invention of that part of it, the device for stopping?

A. When I made the original.

Q. All made together, was it?

A. Yes, sir; it was obvious to me, and probably would be to any mechanic, that the device must have a certain stopping point necessarily. I thought of it because I couldn't help it.

Q. It was all one invention, then, was it?

A. Well, it was developing all the time.

Q. Did you include the whole of the invention in the first machine you made?

A. No.

Q. What part was left out?

A. The portions which were called adjustable stops was left out.

Q. Was the adjustable stops put on your original invention?

A. Yes, sir.

Q. Did it work without adjustable stops?

A. Certainly it did.

Q. Worked perfectly well without adjustable stops?

A. Yes, sir.

Q. Was the adjustable stops necessary?

A. It was not by any means; no, sir.

Q. Why did you include them in the invention?

A. Because they are valuable facilities for operating the device—that is, in setting the valve.

Q. What was the first engine that you made?

WITNESS: Where?

COUNSEL: The first engine to which you applied this device.

228 A. It was a little upright engine, which is now owned by Martin Brown, and has been for the last five or six years used as a printing-press engine.

Q. That is the one you say you did not apply adjustable stops?

A. No; that I did apply adjustable stops to that one. Nichols, Shepard & Company's engine was the one I didn't apply them to on the start.

Q. The first machine you did have adjustable stops?

A. Yes, sir.

Q. But the first one that you applied at Nichols, Shepard & Company's shops you didn't apply adjustable stops?

A. No.

Q. Or any other stops adjustable?

WITNESS: No stops; they were readily adjustable.

Q. Wasn't one a set-screw?

A. Yes; in the second trial they were; in the first trial there would be no stop plates. We had a regular lever quadrant with notches in it, which was an effectual stop so far as it went, but it wasn't rigid enough and allowed the device to tremble, the reach rod to buckle; if it had been stiff enough it would have been an effectual stop; then, to obviate it, I put a stop plate with an adjustable stop in it.

Q. That was on this special engine?

A. Yes.

Q. Before it went away?

A. Yes.

Q. Was that change that was made there essential to the working of that engine? Would it have worked before that?

229 A. Yes; the change certainly was necessary, but I might have made it, made the necessary change, in putting on a heavier reach rod, which would be so heavy that the engine wouldn't have power enough to buckle it up, even if the whole force of the engine were exerted on it.

Q. Before that you had two adjustable stops on the Moon engine?

A. Yes, sir.

Q. Where is that engine now?

A. I don't know where it is now.

Q. When did you say Mr. Nichols saw this the first time?

A. I think it was the tenth of March, 1880.

Q. Adjustable stops were on that, were they?

A. Yes, sir.

Q. At that time did you tell him that you had made application for a patent—at the time you showed him the little engine for the first time?

A. I think I did; yes, sir.

Q. Did you at that time consider the use of the adjustable stops essential to proper working of the engine?

A. No.

Q. Do you now consider it essential to the working of the device?

A. No, sir; I never considered the adjustable stop-work essential to the working of the device.

Q. But you considered some stop essential?

A. Yes, sir.

Q. You never have made one of those engines without using a stop of some sort on one of those reversing gears?

230 A. No; I never made a reverse gear without a stop of some kind; at least I never used one without a stop.

Q. Did you make any statement of the necessity of a stop in this device in your first application?

A. Yes, sir; I think I did.

Q. Did you make any claim for it?

By Mr. PARKER: I object; it is a matter of record.

Q. Why did you not make a claim for it?

A. I guess you will have to ask my solicitor about that; I think that matter was intentionally omitted in some way.

Q. You saw the specifications and signed them, did you not?

A. Yes; but I gave the attorney full power of attorney to substitute or amend.

Q. Did you give him full power to leave out any part of it that he saw fit?

A. I think that was the scope of the power of attorney; I am not certain now.

Q. Why did you afterwards make a second application, in which you applied for these stops, in combination with what you had previously obtained?

A. Well, because I wanted a patent on it.

Q. You understood you had no monopoly over that by virtue of the first patent?

A. I think I could only take the advice of counsel in that matter. Just what my thoughts were at that time I couldn't tell you now.

Q. Did you swear to this bill in the last case in the United States court, of which Exhibit "19" is a certified copy?

231 (Witness examines Exhibit No. "19.")

A. I don't know. I presume I swore to this.

Q. You swore to a bill to be filed there, did you?

A. Yes.

Q. Was it read to you or did you read it?

A. Yes; I read it; yes, sir.

Q. I call your attention to section six of this bill: "And your orators further allege that the invention described in said letters patent numbered 236,052, dated December 28th, 1880, and the letters patent numbered 308,567, dated November 25th, 1884, are capable of being used and are necessarily used conjointly and in the same machine or mechanism."

A. Yes.

Q. Do you remember that?

A. Yes, sir.

Q. Is that true?

By the COURT: I would like to enquire what figure this inquiry into the merits of that patent cuts in this case?

Mr. BURTON: It is material as showing what was included in the contract that was entered into, as we claim, at Mr. Nichols' shop, if they were necessarily used in the same mechanism. If any contract at all was made it necessarily included both of them. It is simply matters which were included in the first patent; that is the point.

WITNESS: As a matter of fact, while an adjustable stop may be used conjointly with the original patent, it doesn't necessarily follow that it must be used; but you will understand that the second
232 patent broadly claims the word "stop," and it is therefore necessary that the two of them be used in using this device.

Q. Now, you say about the 26th of August you went to Mr. Nichols' office for the purpose of seeing him about the application of this device to an engine, and from that time during the next three or four days you had arrived at some sort of an arrangement to put the device on an engine. Did you?

A. Yes, sir.

Q. Did you know what engine Mr. Nichols had in his shop at that time?

A. Yes; I knew tolerably well.

Q. Did he state which engine the device might be applied to?

A. I think he did. I think he offered this traction engine, which was an eight-horse-power engine and smaller than the others which he had used and the one which he could spare the best for the experiment.

Q. Did he state to you that he had an intention of sending that to the fairs?

A. I think he did; yes, sir.

Q. Well, at that time was it your intention to take the device off immediately after a trial?

A. Well, I didn't have any definite idea about it. I agreed to do it in case he wanted me to, and return the engine to its former condition. I know it was a part of the agreement.

Q. Immediately?

A. Well, there was nothing said about just when, except that he wanted that engine to go to the fair; that would imply immediately, I think.

Q. You knew the engine was going to the fair?

233 A. Yes, sir; that was generally understood.

Q. And did you desire to have your device go with it?

A. I had no idea of its going to the fair until Mr. Nichols made the suggestion himself.

Q. You knew that that was the engine for the fair?

A. Yes; I knew we had about a month to do it in.

Q. How long a time did you expect it would take to apply your device?

A. I didn't think it would take me over a week or ten days.

Q. Then you knew that the engine was to be prepared to go to the State fair?

A. Yes; I knew it had to be painted.
Q. Did you know how long it would take?
A. Not for certain; I might have made a close estimate.
Q. How long would it naturally take?
A. I should think it would take seven or eight days.
Q. Why did you desire to have the device on that engine?
A. I had no special desire to have it particularly on that engine.
Q. Why did you desire to have it on any engine?
A. For the same reason I desired manufacturers to try it and see for themselves that it is a good thing.
Q. You didn't know how it would work except on a small engine?
A. No; I couldn't say; that did pretty good work. When a device will work on one scale and I enlarge the scale from a two-
234 horse engine I think it ought to operate just as well on a ten-horse engine.
Q. What did you propose to Mr. Nichols to do for him provided he would let you put the device on the engine?
A. Nothing.
Q. What inducement did you hold out to him?
A. The inducement that it was a good device, one which he might choose to adopt and pay for the same, as I would with other concerns.
Q. Did you say to him if he chose to adopt it thereafter he should pay for it?
A. Well, that was certainly the understanding I meant to convey, while I don't think anything was said about it; I think he understood it that way.
Q. Has it been your experience that manufacturers of machinery do try everything that comes along in that way without any special remuneration?
A. No; I don't think they try everything, but I know they do try a good many things with the expectation that they may find something they will want, that will be for their benefit and use.
Q. You put the device on that apparatus, and on September 18th you say Mr. Nichols told you that if he wanted to use that he would without paying you anything for it?
A. Yes, sir; I think that was the time that he made that remark.
Q. That was before the engine had gone from the shop to the fair?
A. Yes, sir.
Q. Why did you allow him to use your device in that way after such a statement as that had been made?
235 A. I didn't think that his position would make any material difference with the manner in which the trade would receive it, and after having given my consent to have it go to the fair I didn't think it would be right at that late day to withdraw it, no matter what his position was.
Q. Why did you go along yourself as an employee of his?
A. Because I had agreed to go.
Q. Notwithstanding the fact that he had clearly indicated to you this intention to——

A. Well, I didn't regard it as an intention really. I thought it was a matter of bluff, which he wouldn't dare carry out; that it was a sort of an insinuation that he did not mean.

Q. You thought he didn't mean what he said?

A. No, sir; I didn't.

Q. When did Mr. La Fever become interested in this?

A. It was just about a day before I went to the fair.

Q. Did he purchase from you or some other person?

A. He purchased from me.

By the COURT:

Q. What time?

A. I think it was the day before I started for the western fairs.

By Mr. BURTON:

Q. What consideration did Mr. La Fever pay you?

By Mr. PARKER: I object. I think I shall insist upon being heard. It is within the scope of your honor's power to say whether they may have the right to go into the private affairs of Mr. Marsh and Mr. La Fever as to payment.

236 By the COURT: I have seen a great many questions that I think have very little significance in the case. Take the answer.

A. Well, he gave me three hundred dollars for a half interest.

Q. An undivided half interest?

A. Yes, sir.

Q. Purchased directly from you?

A. Yes, sir.

Q. Did some other person have an interest at one time?

A. Yes, sir.

Q. Who was that?

A. My brother.

Q. That was an interest or an agreement for an interest?

A. Just an agreement for an interest.

Q. That was returned to you?

A. Yes, sir.

Q. Did Mr. La Fever's contract cover the whole invention which is included in the description of both these applications?

A. It included——

By Mr. PARKER:

Q. Was that assignment in writing, Mr. Marsh?

A. Yes, sir.

By Mr. PARKER: I object to his testifying what the contract contains.

By Mr. BURTON: We won't insist upon it.

Q. At the time Mr. La Fever purchased was just about the time you started for the fair, was it?

A. Yes, sir; I think the day before.

Q. Was Mr. Nichols informed of that at that time?

237 A. I am not certain about that now.

Q. It was just at the time Mr. Nichols told you if he wanted to use the invention he would?

A. Yes, sir; I think it was the same day. I am quite certain that the transfer was made right away after Mr. Nichols said that.

Q. During all the time you were applying this device you say you only saw Mr. Nichols once?

A. No; I didn't say that.

Q. What was it you said about that?

A. I said I didn't think I saw him more than once.

Q. You had control of Mr. Nichols' employees and all the assistance you desired, didn't you?

A. I did; yes, sir.

Q. Who instructed that?

A. I don't know.

Q. You simply asked for assistance and got it?

A. They were ready to volunteer anything. I don't know where they got their authority from.

Q. The injury to the engine—taking into consideration the chipping of the steam-chest—was somewhat greater than you expected, was it?

A. No; I knew I would have to do that.

Q. Did you tell Mr. Nichols you would have to do that?

A. I don't remember now whether I did or not. I think quite likely I did. I generally do tell all that has to be done in such cases; it is my practice.

Q. The chipping in the steam-chest weakened the attachment, didn't it?

A. No; not any.

Q. Not any?

238 A. Not any in the least.

Q. Do you know whether afterwards that steam-chest was taken away—thrown away?

A. No; I don't.

Q. You know they have to make steam-chests longer than those were?

A. I think they likely do; yes, sir.

Q. You never did put that engine back in the condition in which it was before you took it, did you?

A. No, sir; I never was required to.

Q. That was a part of the contract, as you understood it, that you should do that?

A. If desired, I would do it; yes, sir.

Q. Never was desired to?

A. No, sir.

Q. Ever anything said about your doing it?

A. No; not after it was put on.

Q. Did you ever offer to put it back in shape?

A. Well, I don't know that I did. I will tell you that engine wasn't returned until along in the middle of November, I think.

It went to three fairs, which held it three weeks, besides the going there. It was several weeks coming home after the fair was closed. I know I waited for it quite anxiously. It didn't come back until a couple of months from the time it started away from home.

Q. It leaked a little around the steam-chest when it was out?

A. I didn't notice anything of the kind in the two weeks I was with it.

Q. Did you keep track of what Nichols, Shepard & Co. were doing in their shops, with reference to this device, immediately after that?

239 A. No, sir.

Q. Do you know when they first begun to manufacture the device for application to their engines?

A. I have an idea that they commenced in January.

Q. You think that they didn't commence before that?

A. I don't know that they did; no, sir. I heard at that time they had just commenced.

Q. Did you keep track yourself?

A. No; I didn't go up there to see for myself.

Q. When did you say you went to Indiana to see Gaar, Scott & Co.?

A. It must have been about the 20th of October—no, of November—'80.

Q. You say you stated to them that Nichols, Shepard and Company were manufacturing this device?

A. No; not at that time I didn't.

Q. Were going to?

A. I don't know that I said anything about it at that time. That was the second trip.

Q. On that second trip you mentioned it?

A. I told them when I went back that they were using it.

Q. Did you state to them on either of those trips that Nichols, Shepard & Co. were going to manufacture that device and use it?

A. Well, I think I told them Nichols and Shepard were using it; thought enough of it to steal it. I think I told them that.

By the COURT:

Q. Who to?

A. Gaar, Scott & Co.

240 By Mr. BURTON:

Q. You are sure you told them that?

A. No; not positive.

Q. You think you did?

A. Yes, sir.

Q. Was that before or after they had taken a license—Gaar, Scott & Co.?

A. I think it was before.

Q. Why did you tell them that?

A. Because I believed it.

Q. You told them it had been thoroughly tested, didn't you?

A. I don't know whether I told them that or not. I think they thoroughly tested it. That was what I aimed at—their works, to let them test it.

Q. Didn't you tell Gaar, Scott & Co. that the apparatus had been thoroughly tested by Nichols, Shepard & Co.?

A. No, sir; I did not, to my knowledge.

Q. Didn't you tell them that it had been thoroughly tested?

A. I might have told them; I can't remember now.

Q. Did you think at that time that Nichols, Shepard & Co. were going to use this device without taking a license from you?

A. I did think so; yes.

Q. What reason had you for thinking that?

A. Because Mr. Nichols told me so himself.

Q. Didn't you say a few moments ago you thought Mr. Nichols didn't mean what he said when he told you that?

A. That was a good while before that.

241 Q. You had another interview, had you?

A. We had several interviews; yes, sir.

Q. When you told, if you told, Gaar, Scott & Co. that Nichols, Shepard & Co. were going to use that, did you mean them to infer that they were going to use it with your permission or without it?

A. No; I think I told them that they were—that they wanted to use it bad enough to steal it.

Q. On December or November 29th, 1880, a letter was written which I will ask you if you signed?

(Witness examines letter.)

A. Yes; that is my signature.

By the COURT:

Q. To whom was it written?

By Mr. BURTON: Written to Gaar, Scott & Co. He says, "I have secured a patent on the device for reversing the motion of steam-engines which I wrote you about last spring. It has been thoroughly tested, and gives the operator better control of the engine than can be had with the link motion or any other device." Where had it been thoroughly tested?

A. Well, I think I tested it very thoroughly at these fairs.

Q. There had been no other tests made?

A. No, sir; up to the time I wrote that letter there hadn't been but two of these made.

Q. Gaar, Scott & Co. made nothing but traction engines?

A. They made plain engines and traction engines, too.

Q. When you wrote that to Gaar, Scott & Co. you referred, I suppose, to the tests that were made, or you meant to refer to the tests made on the engine that you took to the fairs, did you not?

242 A. Possibly I did.

Q. You had in your mind what Nichols, Shepard & Co. had done with it?

A. I won't attempt to say what I did have in mind with regard to that.

Q. You didn't have any other thing in mind, did you?

A. I think I had in mind the idea of introducing it to Gaar, Scott & Co.

Q. When you went to the fairs what did you represent this device to be?

A. A reversing device.

Q. Did you make any statement whether Nichols and Shepard were going to use it or not?

A. No, sir; not that I remember of now.

Q. Who did you show it to?

A. Well, I presume to about a hundred thousand people.

Q. Did you show it to any person especially—any manufacturer especially?

A. Yes, sir.

Q. Who?

A. Well, I couldn't attempt to name them all over and give a full list; there were so many there.

Q. Did you show that as an engine belonging to Nichols, Shepard & Co. or did you simply show your device?

A. I showed it as an engine belonging to Nichols, Shepard & Co., and, as a matter of course, this device, being new, attracted a good deal of attention. I took the liberty occasionally to say that I invented it.

Q. Was your showing that engine as one of Nichols and Shepard's traction engines one of their samples?

243 A. One of their sample engines.

Q. That was one of the engines manufactured by them, such as they were proposing to manufacture, wasn't it?

A. I don't know as they proposed to manufacture—I don't think I represented it as——

Q. Did you take pains to distinguish that the engine and boiler were Nichols, Shepard & Company's, and that the reversing device was yours, and Nichols, Shepard & Company would use it if they would pay you for it?

A. I think quite likely I did.

Q. You think? Can you mention any one person that you made that distinction to?

A. As a matter of fact, I had a little hint dropped to me by Mr. Nichols before I went to the fair, and he told me not to make that a special feature of the engine; that I invented that; to exhibit the engine and go with it. So I was careful not to represent to the public that I was out there exhibiting that valve gear, but that I was in the employ of Nichols, Shepard & Company. While I did to several manufacturers—quite a large number of them, for that matter—tell them quietly that that was my invention and I proposed to introduce it to the trade, I didn't make any special effort to advertise it.

Q. And you proposed to induce manufacturers to use that device?

A. I proposed to do it in one way, and if Nichols, Shepard & Company——

Q. Did you say to any one that the engine was one that Nichols,

Shepard & Company had manufactured and the device they couldn't manufacture unless they paid you for it?

244 A. I don't recollect using those words.

Q. You didn't make any statement of that kind?

A. No; I don't recollect that I did.

Q. When did you begin to threaten Mr. Nichols with suits?

A. When I found out that he didn't intend to pay for it.

Q. What time was that?

A. That was, I think—really, the first threat I made was at the time he refused to sign the license. It is possible that we served a notice on him before that, come to think about it, but I am not certain now. I am not certain now when the first threat was made.

Q. Was the refusal to sign the license before or after this written notice was served?

A. That was before this notice was served.

Q. You yourself didn't know of any written notice served before this time of this written notice of February 11th?

A. No; not of my own knowledge; no, sir.

Q. How long after that was it that the license was presented?

WITNESS: After when?

COUNSEL: After the written notice was served.

A. It was before. The written license was presented to Mr. Nichols for inspection before this writing.

Q. How long before?

A. Four or five days, I guess; three or four days.

Q. Did you testify in the Chicago suit in response to this

245 question: "Now, in regard to the arrangement, if any, when you first put the improvement upon one of their engines, what was said and done between you and Nichols, so far as you remember was said?" "Well, that was the result of several days' negotiation with Mr. Nichols, that arrangement. The application of my device to one of Nichols & Shepard's engines was made after several days' negotiation, in which they seemed to be disposed to reject my application to that engine, but finally they consented to let me do so if I would do it at my own expense—if I would apply the device at my own expense—and not mutilate their engine." That was correct, was it?

A. Yes, sir.

Q. Why did it take several days to come to an arrangement of that kind?

A. That question you can probably get answered better by Mr. Nichols; I don't know.

Q. Why, if that was the arrangement, did it happen that almost the first thing you did was to get Mr. Nichols or Nichols, Shepard & Company's pattern-maker to make a pattern for you? Did you pay for that?

A. No. I think that was an arrangement made with E. C. Nichols, for one thing, to avoid delay at the last moment, when he wanted to go to the fair. I think that was it. I guess that's it.

Q. How did it happen that you got them to make the castings?

A. That was a proposal of their own. They were willing to do that.

Q. When was that proposition made by E. C. Nichols?

246 A. I think that was in the original proposition.

Q. Then the proposition wasn't that you should do it at your own expense, and do the work, make the patterns, &c.?

—. ——.

Q. You didn't mean that all the material should be at your expense; simply your own personal labor?

A. Yes; yes, sir; I think he agreed to furnish the material.

Q. Is that what you mean here when you say, "But finally they consented to let me do so if I would do it at my own expense?"

A. Yes, sir.

Q. How is that any expense?

A. It is a question of expense with a laboring man. It certainly would have been if they had paid me for my services.

Q. For whose benefit was this apparatus going to be applied—yours or Mr. Nichols'?

A. That was a question for future determination.

Q. If it was applied and worked satisfactorily you hoped to induce him to use it, didn't you?

A. Yes, sir.

Q. Then would it be for his benefit or yours?

A. Well, it would be for his benefit if he had used it.

Q. Why?

A. Because it was so much better than what he had.

247 Q. Then the arrangement was not that you do it at your expense, but that you do it at your expense for your labor and his expense for the material?

A. Well, I think that was about the way the arrangement was made; that I was to put it on, strip the engine, put the device on, and do the work, and that he would furnish the material; if necessary, to have a little labor. He was interested in having it put on after he had once made up his mind. I volunteered that.

Q. That was a part of the arrangement?

A. I believe it was; yes, sir.

Q. You say that the help aggregated to three days?

—. I think that was about the amount; yes, sir.

Q. You understood that the steam-chest would be mutilated?

A. Yes.

Q. But you said nothing about it to him?

A. Well, I don't know whether I did or not now.

Q. Why didn't you? You don't remember that part of it, whether you did say the steam-chest would be mutilated or not?

A. I don't. I don't remember whether I told Mr. Nichols or not; a matter of no importance whatever.

Q. You put on several reach rods, didn't you?

A. No, sir.

Q. Two at least?

A. Two.

Q. Who paid for them?

A. I presume that expense was stood by Nichols, Shepard
248 & Company, excepting the making of them.

Q. Every particle of the expense that went to changing the device and the replacing and repairing afterwards, except your personal labor, was paid for by Mr. Nichols, Shepard & Company, was it not?

A. I don't know.

Q. You didn't pay for it, did you?

A. I lost track of the engine after it got back from the fairs.

Q. Why didn't you, in pursuance of the agreement that you had made, offer to refit that?

A. Well, I didn't know that they wanted it refitted.

Q. You lost all interest after the thing had been exhibited?

A. I don't know about that. I certainly never lost all interest in the reverse gear I made on the engine. I thought I got through with the engine when I got back from the fairs.

Q. Did the statement Mr. Nichols told you—that he was going to use it, anyway—have any bearing on you in the losing of interest in the engine?

WITNESS: That particular engine?

COUNSEL: Yes.

A. No; I don't think I did.

Q. In the interview that you, Mr. Scott, and Mr. Nichols had you say that Mr. Nichols then, for the first time in your hearing, claimed that he had the right to use that, anyway?

A. Yes, sir.

Q. You denied it?

A. I did deny it.

Q. Did Mr. Nichols show any feeling because you denied it?

249 A. No; I don't think he did. I don't think he expected me to admit it.

Q. Did he say anything about its not being in writing, or did you say anything about its not being in writing?

A. No; nothing said in my presence about it.

Q. That you didn't hear?

A. I didn't hear that.

Q. You are certain he didn't say to you, "But you would have put the agreement in writing if I had asked it?" You are certain you didn't say to him he didn't ask you to put it in writing?

A. Yes, sir; I am certain.

Q. Do you know how many men would ordinarily go with one of those engines to the fair? If there was an engine and separator, how many men would go with the engine and separator?

A. Well, I presume three or four.

Q. Do you know whether your presence was necessary there or not?

A. I don't think it was.

Q. Do you know why Mr. Nichols should have sent you if your presence wasn't necessary?

A. I think the reason why he sent me was because I knew more

about the reversing gear than anybody else. He wanted me to go along and handle it. That's all I know.

Q. Why should he want you to show off that reversing gear if he wasn't going to use it?

A. He wasn't particularly desirous I should go to show the reversing gear. He wanted the engine shown up with the reversing gear on it, and he wanted some one who knew how to handle it.

250 By the COURT:

Q. What do you mean by handling—running it?

A. Yes, sir; running the engine; handling the reversing device.

By the COURT:

Q. Was it difficult so an ordinary man couldn't handle it?

A. No, sir; but it being a new device, your honor, it would require some one who understood it to handle the engine to the best advantage.

Mr. PARKER:

Q. Also who understood a reversing engine to have some idea of it?

A. Yes; this was the first of that class they had ever applied. It was really necessary that somebody should go along to handle the reversing device, while a second man done the steering. I presume he selected me because I understood the reversing device.

By the COURT: I understood you it takes one hand to run an engine and one to steer it.

A. I don't mean that now. One man can do that very well now, but at that time—it being the first one of that class—it was a convenience. It would have been awkward for men not being used to handle an engine of that kind while at the fair.

By Mr. BURTON:

Q. Had you ever had that on a traction engine before?

A. No, sir.

Q. Why should you know more about running on a traction engine than anybody else? It is very simple, isn't it?

A. Yes; it is.

Q. Why should you know more about it?

A. Very simple; for I knew more about it, anyway, than anybody else did.

251 Q. How long would it take a person to understand the working of that?

A. Any man of ordinary intelligence ought to understand the principle, if pointed out to him, and get familiar with it in a day.

Q. Wouldn't he understand it in fifteen minutes?

A. He might. He might have special intelligence in that line.

Q. All that was necessary was to throw the handle over, wasn't it?

A. Yes; but if they didn't understand the device—suppose it gave out, then they wouldn't know how to fix it. In fact, this did give

out on one occasion on the fair ground, and, as I happened to be there, I fixed it in a few minutes, and it went right on.

Q. You testified that Mr. Nichols asked you to go along with the engine and offered to pay you wages?

A. Yes, sir.

Q. What wages?

A. He offered to give me two dollars a day.

Q. Did he pay you?

A. Well——

Q. Did you get your pay?

A. I have an idea that I didn't get my pay fully.

Q. You got fifty dollars, did you?

A. I was paid fifty dollars to start out with.

Q. Anything for wages?

A. I don't remember of ever getting anything for wages.

Q. Did you present any bill for them?

A. No, sir.

Q. Why not?

252 A. I had reasons of my own.

Q. State.

A. I wanted Nichols, Shepard & Company to have the device—take out a license—as I knew Mr. Nichols was somewhat cranky about the device, anyway. He urged me to sell the thing at first just as it was.

Q. When was he a little cranky about it?

A. He commenced to get cranky before I went to the fair.

Q. You saw this entry, being a payment of fifty-five dollars for expenses?

A. Yes, sir.

Q. And $31.50 for fourteen days' labor?

A. Yes, sir.

Q. Did you receive money to those amounts?

A. I have no recollection of the second.

Q. Of the fourteen days' labor?

A. Yes, sir.

Q. How many days were you there?

A. I think I was gone about fourteen days.

Q. That is about the proper time?

A. About the proper time; yes, sir. That is the time I have been credited with.

Q. You don't remember that you received *per diem*—days'—wages?

A. I don't remember getting pay; no, sir.

Q. Who paid your board bills?

A. Well, I did; I paid for them myself.

Q. Any one else pay any part of them?

A. Yes.

Q. Who?

A. Mr. Ellsworth.

253 Q. That was charged to you?

A. I think it was.

Q. Did you pay it to him or was it charged over to the company?
A. I think likely it was. No; I never paid it, I know.
Q. You say you didn't present a bill for your days' wages because Mr. Nichols was a little cranky? You wanted to humor him; was that it?
A. Yes; that's it.
Q. Did you think the amount of twenty-eight dollars would make any difference with him?
A. Yes; I presume I did; I don't know now; I don't recollect about that.
Q. Do you say you didn't get the pay of $31.50, as charged against you—days' wages?
A. No; I am not certain about it. I don't deny that it was paid.
Q. Did you take the place of another man on that engine?
A. So I was informed by Mr. Nichols himself.
Q. What other man was it? Do you know?
A. No; I do not.
Q. You don't know of any other man who was intending to go away if you didn't?
A. No; I don't know who it was.
Q. You are somewhat accustomed to go to State fairs, are you?
A. No.
Q. You know now how many men would be necessary to run an engine of that kind and exhibit it properly?
254 A. It ought to have two men with the engine and two men with the separator, I should think, to properly exhibit it.
Q. Four men?
A. Four men; yes, sir.
Q. Were you short of help there at that time?
A. No, sir.
Q. Were you employed all the time in exhibiting the engine?
A. Well, I was at my business around the engine all the time.
Q. Did you, in exhibiting the engine, do anything more than exhibit its reversing qualities?
A. Yes. I fired the engine considerably, oiled it up, and run it a good deal all alone.
Q. Did you stand around and exhibit it when it was attached to the separator or used as a stationary engine?
A. It wasn't used in that way very much; any more than an hour or two a day anyhow.
Q. You are not now certain whether he paid you more than fifty dollars or not?
A. Fifty dollars was received in cash at the time before I left for the fair.
Q. Before you went away?
A. Before I went away.
Q. How much did you receive after you came back?
A. I won't attempt to say how much I did get.
Q. When your attention was called to this same question in Chicago, in the Chicago case, you said that he paid you fifty dollars.

You were asked, "Was that all that was paid?" to which — replied, "I believe it was; yes, sir."

255 A. Yes, sir.

Q. Was your memory better then than it is now?

A. I hadn't seen that item in the book when I said that.

Q. Wasn't that book in the interference case?

A. Yes, sir.

Q. Didn't you know all about it at that time?

A. Yes, sir; but I didn't see that item in the book at that time.

Q. Hadn't that book been offered in evidence, or the entries in it?

A. Yes, sir.

Q. You were present when it was put in evidence?

A. Yes, sir.

Q. You hadn't seen it?

A. I saw the book; yes, sir.

Q, Hadn't you seen—hadn't your attention been called to that very item?

A. No, sir.

Q. You say that interview with Mr. Scott and Mr. La Fever, just preceding the interview at Mr. Nichols' house, was a result of a visit of yours to Detroit, where you met Mr. Parker and myself?

A. Yes, sir.

Q. In which he made a certain statement to you?

A. Yes, sir.

Q. Who made those statements to you—Mr. Parker or I?

A. I think you did.

Q. What did I tell you?

A. Well, sir, my recollection is that you told me that Mr. Nichols had been down there and expressed a desire to have this case settled.

256 COUNSEL: Yes.

WITNESS: Thought I had better see Mr. Nichols; thought the matter could be satisfactorily arranged. That is my recollection.

Q. Anything further?

A. I think you stated—you or Mr. Parker, I don't know which one—that Mr. Nichols said that he thought that he was more than half in the wrong.

Q. You won't say whether I stated that or whether Mr. Parker did?

A. One or the other stated that. My impression is that you said it; I don't know.

Q. When you gave your Chicago testimony you said that I said that, did you not?

A. I don't recollect now.

Q. You say now that I made that statement to you?

A. I think so; yes, sir.

Q. You further stated that I said to you that Mr. Nichols felt that the matter was hurting his reputation very badly?

A. Yes, sir.

Q. Which do you think?

A. I think you did.

Q. Are you certain of it?

A. Either you or Mr. Parker.

Q. I wish you would locate that as to which one of us it was.

A. It would be hard to do that.

Q. I will read the entire answer that you made: "Well, in regard to that interview which was at the house of Mr. Nichols when Mr. Scott was there, I had been down to Detroit a few days before
257 that, and I met the counsel for Nichols, Shepard & Company, with our own counsel, and they told me—both of them—that Mr. Nichols had been to Detroit a few days before and expressed a strong desire to have the whole case settled up, and would like to have a talk with Marsh, La Fever and Company, or some of them. He said he felt convinced he was more than half in the wrong, and it was hurting his reputation very badly." From whom did you get that information; Mr. Parker or me?

A. Well, we were all three in the same room together talking there, and you done as much of the talking as anybody.

Q. What did I say about Mr. Nichols' statement to me?

A. I think that is the part just read.

Q. You are sure I said that to you?

A. I am sure one or the other said it to me; I think you did; yes, sir.

Q. It was the result of that conversation with us, was it, that finally brought about the meeting at Mr. Nichols' house?

A. Yes, sir.

Q. You say that you first heard of the claim—that is, Nichols, Shepard & Company's claim—of the right to use this within the last two years. Where did you first hear that claim?

A. I think Mr. Metcalf told me that Mr. Nichols was circulating such a report around among the business men in Battle Creek.

Q. The first claim you heard was that he would use it any way if he wanted to, was it?

A. Yes, sir.

258 Q. Without regard to any arrangement?

A. Yes, sir.

Q. About two years ago; can you fix the date?

WITNESS: What circumstances do you want?

Q. Can you fix the date Mr. Metcalf told you this?

A. Well, it was in the summer of 1883; it might have been in the early part of the summer.

Q. Was it before or after Mr. Nichols made a claim in Mr. Scott's presence?

A. It was before that.

Q. How long before?

A. Three or four months.

Q. Have you taken any pains to contradict that report?

A. I have taken pains to say it was a lie, when I first heard it, to two or three men.

Q. Had Mr. Scott said anything about it?

A. Yes; I think that he heard Mr. Metcalf telling that and he scouted the idea.

Q. You denied it in Mr. Scott's presence, then?

A. Yes.

Q. During all of that one hour and a half that you and Mr. Scott and Mr. Nichols were together what were you talking about?

A. About the bill, about Congress, about the interference case, and the decision of Judge Brown—the different branches of the suit and our case.

Q. Any proposition towards a compromise at all, except the one by Mr. Scott, of the payment of ten thousand dollars?

A. No, sir.

Q. Did you not go up there because you had heard that
259 Mr. Nichols was seeking to compromise—wanted to make a settlement?

A. Yes, sir.

Q. You didn't talk settlement after you got there?

A. I went up there to find out whether it was true or not; whether he meant it.

Q. You didn't believe me when I told you?

A. Yes; if I hadn't I shouldn't have went up there. I wanted to find out whether he was telling you the truth or not.

Q. Or was it Mr. Parker that told you?

A. It couldn't have been that——

Q. You are not sure whether it was me told you or whether Mr. Parker?

A. I won't swear that it was you particularly; I know that you had a good deal to do with the conversation.

By the COURT: You have been all over this once.

By the COURT:

Q. You said before you went West with the machine that Mr. Nichols gave you to understand that he should use that patent without compensation, did you not?

A. Yes, sir.

By the COURT:

Q. What led to that remark by him?

A. Well, I think that I stated, in giving my testimony, that he had made a remark the day before which led me to think that he wanted to take an interest in this invention of mine. As I hadn't yet sold an interest to Mr. La Fever, I thought perhaps Mr. Nichols would buy an interest in it, so I went up to see him about it
260 and asked him, and he said that he wouldn't give anything for it; he didn't want it, didn't want to use it, but if they did they'd use it; he would use it anyway. I asked him if that is what he meant and he gave me to understand if he wanted to use it he would use it anyway.

By Mr. BURTON: I think that is all the cross-examination of this witness, if the court please; I suppose he will be here in the morning if we find anything omitted.

ELON A. MARSH, defendants' witness, recalled, further testifies as follows, viz:

Cross-examination by Mr. BURTON:

Q. One or two more questions I wish to ask you, Mr. Marsh. Mr. Marsh, have you ever notified persons that you understood were intending to purchase machines from Nichols, Shepard & Company that you claimed the reverse gear on those engines, and that Nichols, Shepard & Company had no right to use or sell them, and that you should look to them or hold them responsible for payment to you if they bought from Nichols, Shepard & Company?

WITNESS: Hold the individuals responsible—the purchasers?
COUNSEL: Yes, sir.

A. No; I don't remember ever having notified anybody to that effect.
Q. Never said that to anybody?
A. Not that I know of; no, sir.
Q. Do you know Mr. Whittaker, who was here yesterday in the room?
A. I have met him once or twice; yes.
Q. Did you know that he was about to purchase an engine in the spring of 1883?
261 A. No.
Q. Did you meet him on the street and tell him if he purchased an engine with your reversing gear you should look to him for the payment?
A. No, sir.
Q. Any words to that effect?
A. Not that I remember of.
Q. Are you sure you didn't?
A. Yes, sir; I am quite positive I didn't.
Q. About what amount of royalties have you collected for the use of this gear?

By Mr. PARKER: I object to it as incompetent and irrelevant, and I have a great notion, if your honor please, to instruct the witness not to answer. It is going into their business.
By Mr. BURTON: The object is to show that this invention has been very valuable to them, and we shall claim argumentatively as the result of our work.
By the COURT: You can go on with the questions.

A. Well, sir, my impression now is we have received between four and five thousand dollars in royalties.
Q. From various manufacturers?
A. Yes, sir.
Q. Up to the present time?
A. Yes, sir.

Redirect examination by Mr. PARKER:

Q. I would like to have you fix the time when you asked him with reference to the remark?

By Mr. BURTON: We did fix it, in the spring of '83.

By Mr. PARKER: Where?

262 By Mr. BURTON: At Battle Creek.

By Mr. PARKER: It is indefinite—in the spring of '83.

By Mr. HILL: You can make it plainer on cross-examination.

By Mr. BURTON: I don't know that I can impeach Mr. Marsh.

By Mr. PARKER: Unless you ask it for impeachment I don't suppose it makes any difference.

By Mr. BURTON: I can show the fact; that is all.

By Mr. PARKER:

Q. Mr. Marsh, did you bring with you your memorandum that you referred to yesterday?

A. Well, I brought with me one memorandum, but I didn't find the one which I referred to yesterday as showing the date of shipment of that engine and of the trip to the St. Louis fair.

Q. You say you couldn't find that?

A. No, sir.

Q. What one did you find?

A. I found the one in which I kept a memorandum of my trips while introducing this valve gear.

Q. Covering what period?

A. From the fall of '80 until about '82, I think.

Q. Do you know when you left home on those trips?

(Witness refers to Exhibit "No. 20.")

A. I left home the 7th of December, '80. I went to Richmond, Indiana.

Q. That is, you left Battle Creek?

A. Yes, sir.

Q. When were you in Battle Creek again?

A. I returned to Battle Creek the 24th of December.

263 Q. Remained there how long?

A. I remained there until the 27th of December and went to Indianapolis.

Q. And when did you return again?

A. On the 4th of February.

Q. During the time that you were at home between the holidays did you see Mr. Converse?

A. I did not, to my knowledge.

Q. Before you went away did you have any conversation with Mr. Converse on the first occasion?

A. No, sir.

Q. After you came back what was the first business that you had with Mr. Converse?

A. The first and only business which I can recollect now was the

preparation of the notice which I served on Nichols, Shepard & Company to discontinue the use of my valve gear.

Q. That is the notice that has been in evidence and served on the 11th?

A. Yes; I think it is.

Q. Have you any entries there with reference to that notice?

A. Battle Creek, February 11th, 1881. To Mr. Converse for drawing notice to serve on Nichols, Shepard & Company, 75 cents.

Q. Was that money paid?

A. Yes, sir.

Q. Was he employed in that matter?

A. Yes, sir; he was employed to draw up that notice.

Q. In what capacity was he employed?

A. Well, as a lawyer, I suppose.

Q. That is, as your attorney?

264 A. As an attorney; yes.

Q. When were these entries made?

(Witness examines Exhibit "No. 20.")

A. They were made at the time.

Q. What does it contain—the book generally, this Exhibit "20"?

A. It is a memorandum book.

Q. Of what matters generally?

A. I presume general matters. There are other matters besides those which I mentioned.

Q. It seems to be principally entries of payments, &c.?

A. Yes, sir; items of expenses.

Q. From what item will you point out, do you know, the occasion of your leaving that refreshes your recollection on the first occasion?

A. The first item of expense is my railroad fare to Kalamazoo, 70 cents, December 7th, '80.

Q. Where did you go?

A. Kalamazoo. December 8th, paid hotel bill, $1.25; railroad fare to Richmond, Indiana, $6.25.

Q. What is the next entry there with reference to it?

A. December 9th, arranged with Gaar, Scott & Co. for the control of our reversing device.

Q. And the next?

A. Payment of the hotel bill on the 9th.

Q. Where?

A. At the Arlington House, in Richmond, Indiana.

Q. What are those items?

By Mr. HILL: What is the object?

By Mr. PARKER: I dislike to have the book in evidence, because there are a large number of entries in there——

265 By Mr. HILL: Is there any dispute about the time he went down there?

By Mr. PARKER: Well, in a certain way there is a dispute. Mr. Converse testified that off and on during all this time he was in his

office repeatedly and talked with him about this matter. There is a dispute in that way.

By the COURT: The witness testified he wasn't; this book is not original evidence of anything.

By Mr. PARKER: It is as much original evidence as the book if put in and admitted.

By the COURT: Very likely; you could put this in under the rule. The court is not responsible for a great many things that have happened in this case.

By Mr. PARKER: Very true.

Q. So far as you know when you got through was the time that you employed Mr. Converse as an attorney?

A. Well, I think that was the first case that I had with him?

Q. How long did that employment continue?

A. Well, on that particular occasion, only for that day.

By Mr. BURTON: May I see the book?

WITNESS: I don't care to have the book go in evidence.

By Mr. BURTON: I have a right to see the paper.

Q. When was he next employed?

A. About the latter part of or about the middle of April, I think.

Q. Where were you at that time—in the intermediate time?

266 A. Well, I had been away again and had returned about two or three weeks; I don't think I was gone away long.

Q. Did you see him between the time of the employment in regard to that notice and when he was second or next employed?

A. No, sir; I don't think I did.

Q. During the time that you saw him in this matter did you make any statements to him with reference to this matter except by way of employment by you as your attorney?

A. I don't remember of having made any such statements.

Q. Have you had any trouble with Mr. Converse?

A. Well, nothing special, I believe.

Q. What difficulty have you had with him, if any?

A. We had a dispute on a bill that he presented to us once. He furnished us with press copies of testimony taken by him, and they were so poor we couldn't read them, and he charged us a pretty steep price. We refused to pay the bill, and he has had to sue for it—for payment—and finally accepted less than half of his original bill against us.

Q. Then you had some difficulty with him?

A. We had some difficulty; yes, sir.

Q. Do you remember having any conversation with Mr. Whittaker at all with reference to this valve gear?

A. Yes, sir; I do.

Q. What was it?

A. Well, in the winter of '82 and '3 I was foreman for R.

267 B. Merritt—that is, of his machine shop—and during that time I was foreman there Mr. Whittaker came in one day and said he just had a talk with Ed. Nichols about this case.

Q. What case do you mean?

A. About the patent case. He didn't, I think, understand that there were any branches of the case; and he said that he bought a machine once of the Birdsell Manufacturing Company, or he bought it of somebody, and Birdsell made him pay a hundred dollars for the infringement, and he told Ed. Nichols that he wouldn't buy one of his engines on that account, because Marsh could come onto him and make him pay for it—pay for the valve gear; and he said Ed. Nichols gave him a guarantee that Marsh should never molest him. I don't recollect that anything particular was said about it. He seemed to bring it to me as a matter of news, as something that would interest me—the talk he had with Ed. Nichols. I don't recollect paying particular attention to the matter at that time.

Q. Did you threaten him at all yourself?

A. No, sir; I don't think I did. No, sir; I never talked of threatening anybody in that respect. I always considered Nichols, Shepard & Co. were abundantly able to pay for it, and they were the parties in my mind who should pay for it.

Q. By the way, I neglected to ask you how old you are.

A. Thirty-one years of age.

Q. Did you do anything with reference to the introduction of this bill that has been produced in Congress?

A. Yes, sir.

268 Q. State briefly and generally what you did; whether you went down there and saw after it, how long you were gone, &c.

A. Well, sir, I drew up the bill, got members of Congress to introduce it in both houses, went before the committees and argued the matter before the committees, and spent a good many months there.

Q. Where?

A. In Washington and about Congress to get the bill passed.

Q. At a large expense?

A. Yes, sir.

Q. Do you know Mr. Mahon?

A. I do.

Q. Of Washington?

A. Yes, sir.

Q. He has been acting for Nichols, Shepard & Company in this interference, has he not?

A. Yes, sir.

Q. Been up here taking testimony?

A. Yes, sir.

Q. Did he appear before those committees?

A. He did.

Q. And opposed the reports?

A. Yes, sir.

Q. In what manner?

A. Well, by his personal appearance and arguments, and also on one or two occasions by additional counsel.

Q. Who?

A. Warren Stone, of Washington.

Q. Was Mr. Stone in the interference case also on that side?
269 A. He was.
Q. What argument did he use before the committee?

By Mr. BURTON: I object.

A. That the device was old and public property, and if Congress gave me a patent that it would cause innocent users to pay for it; men that had the right to use it by the fact that it was old and public property.

Q. Did he claim to represent any one?

By Mr. BURTON: I object.

A. He claimed to represent Nichols, Shepard & Company and C. Aultman, of Canton, Ohio.

Q. After the decision by Judge Brown in April, 1883, do you recollect having an interview in Battle Creek with myself, Mr. Scott, and others?

A. I do.

Q. Was the opinion by Judge Brown there on that occasion?

A. Yes, sir.

Q. Do you know whether it was read, or portions of it, and the contents discussed?

A. Yes, sir; I think it was.

Q. Did Mr. Scott hear it?

A. Yes, sir.

Q. Did he take part in the discussion?

A. Yes, sir.

Q. How long was that discussion or interview?

A. Three or four hours, I should think, in length.

Q. How thoroughly was the matter gone over?

A. Well, I should think pretty thoroughly.

Q. Any dissatisfaction expressed by Mr. Scott for want of knowledge or anything of that kind?

270 A. No, sir. I don't think there was.
Q. Who else was present?

WITNESS: Besides Mr. Scott?
COUNSEL: Besides Mr. Scott and yourself.

A. Mr. La Fever, Mr. Metcalf, and yourself.

Q. For how much can this valve gear be made of yours?

A. Well, sir, it can be manufactured for any price between two and five dollars.

Q. What advantage was it, then, over the device that was then being used by Nichols, Shepard & Company?

A. It had every advantage.

Q. Name some of them.

A. It allowed the operator to handle the engine at his will. He could run either backwards or forward and reverse the motion of the engine—that is, without shutting off the steam—whereas in the other instance it was necessary to shut the engine completely down, come to a dead stand, and let some one or more men disengage the re-

versing mechanism which they had and shift its position; then it required a starting up of the engine again and a movement in the other direction.

Q. From your testimony that you gave before—yesterday and now—I judge this (to make it plain): That the reversing gear was a shifting gear-wheel that was engaged between the main shaft and the driving wheels?

A. Yes, sir.

Q. And that it was fastened to its shaft. Am I correct?

A. Well, I don't know that the pin passes through the wheel into the shaft.

271 Q. Where was it?

A. It was a sort of triangular apparatus—that is, there were three wheels which intermeshed together in a sort of a triangular frame. Two of them would engage laterally with the driving wheel on the shaft. When one of them, for instance, was drawn up by dropping the lever down the engine should run forward; by raising the lever up it would disengage this one I speak of and engage the one that would shift, then reversing the motion of the engine.

Q. That is, the whole engine?

A. The whole engine.

Q. Going backward or forward?

A. The engine parts didn't reverse at all.

Q. The engine on the boiler kept running the same way?

A. In the same direction; yes, sir.

Q. You say it was necessary for a man to stop his engine and get down off from it?

A. Yes.

Q. Shift the frame, then go back again and apply steam before you could reverse the motion of the whole engine?

A. Yes, sir.

Q. By this device of yours you could reverse right from the platform without even shutting off steam?

A. Yes.

Q. What would be the expense of using the old form of link motion on this engine?

A. Well, with the same class of work which would make one of our valve gears for five dollars, the link motion would cost

272 from twenty-five to thirty dollars; so I would say that the link motion, made just as well, with the same class of workmanship, would cost from five to six times as much.

Q. What royalty did you charge or were you charging at that time?

A. Practically five dollars.

Q. Five dollars on each engine?

A. On each device; yes, sir.

Q. So that, even with paying the royalty, they would have derived a very large advantage?

A. Yes, sir.

Q. Over the old form—over the common link motion?

A. Yes, sir.

Q. Do you know whether Mr. Bradley was accustomed to reversing the engine at the fair from the platform when you went with him?

A. No, sir; I don't think he was.

Q. Had he handled that engine at all before it went to the fair so as to understand "the feel of it," so to speak?

A. No, sir; I don't think he had operated my reversing device at all at that time.

Q. Would it have been safe to have trusted it to a man who hadn't operated it at these fairs?

By Mr. BURTON: I submit that is a matter of opinion and incompetent.

By Mr. PARKER: It is a matter of expert opinion. Mr. Marsh is an expert.

WITNESS: Well, it might have been possible for him to have handled that all right, although I don't think it was probable. The device was new and entirely unknown to him in practice,
273 and, beside that, he wasn't used to handling reversing devices of that character which enabled him to handle the engine from the driver's stand.

Q. How long, if you know, had Nichols, Shepard & Company been using this old reverse gear that you have described?

A. I don't think they had been using it but one season before.

Q. When you put that reverse gear on the engine will you describe the form of stop that was used against which the swinging arm that carried the movable wheel rested when the engine was running?

A. When I first applied that device to that engine I didn't have that arm of which you speak for the frame of the movable wheel to rest against.

Q. You changed it; you put it on?

A. Before it went to the fair?

Q. Before you finished the test?

A. Yes, sir. That device consisted of a piece of wrought iron bent into the proper form and bolted to the boiler under the swinging frame of this device, and contained one set-screw, which afforded me the perpendicular adjustment, and the strap itself was capable of adjustment in a longitudinal direction by slipping along on the boiler. When the device was thrown from one direction one of the arms rested against the wrought-iron strap, and when thrown in the other direction one of the other arms rested on the head of the set-screw of which I spoke.

Q. Was there any upright standard as shown substantially in Exhibit "6?"

A. There was not.

Q. You heard Mr. Nichols' testimony upon that point, did you?

274 A. Yes, sir.

Q. Will you state whether it was correct?

A. Well, sir, it was incorrect.

Q. If I get your idea, this block was bolted to the boiler under the shaft partially?

A. Yes, sir.

Q. And the arm, if slid on the boiler, made the adjustment?

A. Yes, sir.

Q. Tilted up?

A. Yes, sir.

Q. And when the arm came down there was a set-screw by which you could get the adjustment perpendicularly?

A. Yes, sir.

Q. The other one was the horizontal adjustment?

A. Yes, sir.

Q. There was no upright arm with a stop against which it struck in passing down, and then another one at the top?

A. No, sir.

Q. In what condition was it when it went to the fair?

A. Well, it was in the condition which I have described with regard to that wrought-iron stop.

Q. When was any change made in that?

A. I don't know when the change was made—any change was made in that regard.

Q. When you came to apply stop plates to engines afterwards what change did you make?

A. I applied a perpendicular stop plate.

Q. As shown in your patent subsequently obtained?

275 A. Substantially the same as that.

Q. I now show you letters patent 308,567, which may be marked for identification, granted to E. A. Marsh November 25th, 1884. Will you state whether or not that is the letters patent issued as the result of the interference case—of the decision in that case?

(Witness examines Exhibit No. "21.")

A. It is; yes, sir.

Q. I call your attention to the second sheet, to the drawing figure three, and ask you if that is the form of stop that you subsequently applied.

A. Yes, sir.

Q. Do you know whether or not that form of a stop was afterwards used by the complainants, Nichols, Shepard & Company?

A. It was; yes, sir.

Q. How long have they used it to your knowledge?

A. I think they have used it since the spring of '82.

Q. Up to how long?

A. Up until last fall. I don't know but they are using it yet, for that matter.

Q. I call your attention to figure 2 upon the second sheet—sheet 2—to the slot "S" in the swinging arm and ask you to explain the relation between that slot and the standard "N" in figure "3."

A. Slot "S" in figure "2" is means provided for guiding the

swinging frame along the surface of the standard of stop-plate end——

COUNSEL: Don't be too technical. See the letter "U."

A. Provides facilities for preventing vibrations in the arm of the swinging frame.

276 Q. Do you know whether or not the complainant used that?

A. They did; yes, sir.

Q. Was that involved in the original matter?

A. No, sir.

By the COURT: What do you mean by "being involved in the original matters?"

By Mr. BURTON: It is indefinite; that's a fact.

Q. In the original application of the reverse gear to the engine at their shops?

A. It was not.

By the COURT:

Q. I understood you to say it was not upon that engine at all?

A. It was not upon that engine that was taken to the fair.

By the COURT:

Q. On the engine—the small engine?

A. No, sir.

Q. The engine that was taken to the fair, referring again to figure 3 of sheet 2 on this exhibit 21, I understand you contained so much of that figure 3 in substance as extends up to the letter "N," cutting arm off at that point?

A. Yes, sir; that was what it was in effect.

Q. In shape?

A. In shape.

Q. And that subsequently with other additions were made?

A. Yes, sir.

Q. Mr. Hoag claimed to have invented that stop plate, did he not?

A. Yes, sir.

Q. Did you hear his testimony upon that point?

277 A. I did.

Q. When and where did he claim to have invented it?

A. He claimed to have invented it in the yard of Nichols, Shepard & Company's, and on the 7th day of September, in about one second.

Q. What particular piece of mechanism did he claim to have constructed of that invention?

By Mr. HILL: I can't see any possible relevancy to this testimony.

By Mr. PARKER: That is a matter for argument hereafter.

WITNESS: The stops for limiting the throw of the mechanism and providing means for making those two stops adjustable.

Q. What particular piece of mechanism?
A. It was the stop plate.
Q. This same stop plate that you put on that engine, do you mean?
A. Yes, sir.

By the COURT:

Q. On what engine?
A. On the engine at Nichols and Shepard's; at their shops; the one which went to the fair.

By Mr. PARKER:

Q. The first engine?
A. The first engine.

By the COURT:

Q. There had been a stop different from this, as I understood your testimony?
A. It was a stop different in form only, your honor, but in effect the same.
By Mr. PARKER: Was the dispute between you and him in reference to who invented that particular stop plate that went on to that particular engine?
A. Yes, sir.
278 Q. As to whether you made it or he made it?
A. Yes, sir.
Q. And not that he had constructed an independent stop plate at some other time and place?
A. No, sir.
Q. In regard to the steam-chest, will you state just what that was, the construction of it, and how it was chipped out?
A. The steam-chest was a cast-iron box, perhaps ten inches long, seven or eight inches wide, and three inches deep, open at both sides and at one end. I had to chip——
Q. State how it was fastened to the cylinder first.
A. It was fastened and set by means of several bolts—I think six—which passes down through the walls of this box, and at each bolt hole there was a slight enlargement in the wall of the steam-chest semicircular——
Q. Draw a diagram.

By the COURT: What significance has this question of how much chipping it took?
By Mr. PARKER: To understand the construction.
By the COURT: What do we care about its construction? It is a mere question of dollars and cents. This case won't hinge on a matter of ten or fifteen dollars to that steam-chest.
By Mr. PARKER: It is a matter they have gone into.
By the COURT: You can go into it now. The question is whether a contract was made here. The amount of chipping done won't

make any great difference, but you can take the proof if you consider it important.

279 By Mr. PARKER: I shouldn't consider it of any importance if they had gone into the matter pretty fully; they have gone beyond the contract.

(Witness draws diagram in pencil, subsequently marked Exhibit "22.")

By the COURT: If he has got to take any time drawing it you had better call him again.

WITNESS: I am all through now, your honor.

By Mr. PARKER:

Q. Now, will you explain?

WITNESS: The chipping necessary to be done on the steam-chest?

Q. Describe its construction about the bolt holes first.

A. This represents a plan of the steam-chest, looking down on the top of it, with the valve seat underneath or on the surface of the cylinder and the ports in the valve seat. Around it is the walls of the steam-chest with the bolt holes running through and the semicircular enlargements which surround the bolt holes. At one end I had shown in figure one a dotted line across two of these enlargements representing the amount which I had to chip out with a cold chisel. In figure "2" I have shown by section a portion of this wall, and by letter "A" about the proportionate amount of iron I chipped out from that semicircular enlargement.

Q. The circular space represents the bolt hole?

A. Represents the hole running through.

Q. Was the width—the bearing of the holes of that steam-chest upon that valve seat—decreased in extent by that cutting out?

A. It was; yes, sir.

Q. How much?

280 A. I don't remember just exactly how much, but I think it took away a good portion of it on the inside of the bolt.

Q. Was the width of the bearing on the valve decreased between the bolt holes?

A. It was not.

Q. From one to the other?

A. No, sir.

Q. That bearing had to be steam-tight?

A. It did; yes sir.

Q. Did the chipping out have anything to do with the being steam-tight and rendering it inefficient in that respect?

A. No, sir; it did not cause it to leak any that I now remember.

Q. Would the cutting out to the extent that you have shown and the enlargement at the bolt holes have any tendency to weaken or destroy its efficiency as to being steam-tight if it was properly packed?

A. No, sir; it certainly would not weaken it; and while I don't think it would be advisable to do it unless there is some object in it, yet it didn't in that case cause the steam-chest to leak.

Q. Will you state whether or not you were anxious all the way through this matter until this suit was brought to come to some arrangement with Nichols, Shepard & Company for the use of the gear?

By Mr. BURTON: I object whether he was anxious or not; he can show what he has done.

A. I was; yes, sir.
Q. Did you make any effort in that direction?
A. I did.
Q. What reply did you receive?
281 A. That Nichols, Shepard & Company probably wouldn't use it.

By Mr. BURTON:

Q. From whom?

By Mr. PARKER:

Q. State from whom—from whom did you get the reply.
A. From E. C. Nichols; he was the only one of the firm I ever negotiated with, and at first, before he commenced using it, it was his impression all the time that Nichols and Shepard's would never use it, and finally when they did use it they used it because I had no legitimate claim upon it.

Recross-examination by Mr. BURTON:

Q. Will you look at figure 3 on Exhibit "6" and tell me what there is included in the patent that was the result of the invention subsequent to the 8th day of September—subsequent to the time you put that apparatus on the exhibition engine?
WITNESS: You must make your question a little plainer.
Q. What part of that did you invent after you fixed up the exhibition engine?

By Mr. PARKER: I object to the question as to whether he invented anything afterwards; there is no testimony that he did.

A. Nothing that I see in that exhibit that I invented after that time.
Q. Everything that is included there, then, was a part of what you proposed to show on that exhibition engine?
A. No.
Q. What part of that didn't you propose to show?
A. The parts that I didn't show is the slot "S," which prevented lateral vibration.
282 Q. That is all, is it?
A. Yes; that is practically all; of course, there are forms there which I didn't use; the form of stop plate, for instance, I didn't use.
Q. Did you use a mechanical equivalent to that form?
A. I did; yes, sir.

Q. A mechanical equivalent to everything else that is shown there except the slot?

A. Yes, sir.

Q. Do you know whether Nichols, Shepard & Company have used that slot since that patent was issued?

A. No, I don't.

Q. Do you know whether they are using it now?

A. I do not, now.

Q. Do you know whether they have used it or not?

A. Yes, sir.

Q. Do you know whether they have ever used it with that set-screw by this "U" part of that slot?

A. No; I don't know whether they used that part of it or not. I don't remember now. It has been probably a year since I examined one of their engines.

Q. Is that slot of any utility unless the sides of the "U" press up against the segmental guide?

A. Yes.

Q. What is the duty of it more than——

A. If I understand your question, they don't have to press against it; they can be fairly free and yet prevent any material vibration.

283 Q. They must be so close to it that if there is any vibration it will stop by the coming together of the parts?

A. Yes, sir.

Q. If the "U" part is so that it will not rub or touch on more than one side, then it would be without utility, would it not?

A. Yes; I think it would, so far as that point is concerned.

Q. Is it embraced in that part of the invention in that patent?

A. I don't understand the question. I would say that if it touched on one side it would still have utility; it would only be in case it didn't touch at all.

Q. Just on one side it would be equivalent to a straight arm, would it not?

A. Well, that would depend upon whether that straight arm touched the guide or not.

Q. I show you specifications and drawings of patent No. 244,807, the Hoag patent, and ask you if that is the original of the reissued patent with which you went into interference.

(Witness examines Exhibit "No. 23.")

A. I should presume it was.

By Mr. PARKER: I guess we concede that; there is no question about that; I don't see how there could be.

By Mr. BURTON:

Q. I show you reissued patent No. 9951 and ask you if that is the reissue of the Hoag patent.

(Witness examined Exhibit "No. 24.")

By Mr. PARKER: We concede that is the reissue.

A. I think that it is.

Q. What became of the patterns that you made when you were putting them onto the trial engine?

284 A. I have no means of telling you, sir; I left them at the shop there.

By Mr. PARKER:

Q. When did you leave them?

A. I never took them away; I left them at the time they were made.

By Mr. PARKER:

Q. When you went to the fair?

A. Yes, sir.

By Mr. BURTON:

Q. Did you ever call for the patterns or attempt to take them away?

A. No, sir.

Q. Will you let me take that memorandum book?

(Witness hands "Exhibit No. 20" to counsel.)

By Mr. PARKER: Show Mr. Burton the entry.

WITNESS: I suppose it isn't necessary for him to take that book and examine all the items in it; there are some private matters in there.

Q. Was this a memorandum book that you kept for the purpose of keeping track of this matter?

A. That and other matters; yes; a general memorandum book.

Q. You got it about that time?

A. Yes, sir.

Q. The first entry in here appears to be December 7th, 1880.

A. Yes, sir.

Q. A new book you got, then, was it not?

A. Yes.

Q. And the first, second, third, and fourth of these entries are all of them in relation to this matter here, are they not?

A. Yes, sir; in that fore part of the book there.

Q. For two pages or more?

285 A. For twenty or more.

Q. In relation to your dealings with this invention and attempting to get it introduced?

A. Yes, sir.

Q. Did you commence keeping this book for the purpose of that?

A. Yes, sir.

Q. What became of some of those pages torn out here—three of them?

A. I don't know; I didn't know that any had been torn out.

Q. There appear to be three or four of the first pages torn out, are there not? Were there any entries on there pertaining to this matter?

A. No, I don't think there were any; if they were torn out it must have been torn out long ago; possibly before I used it for that purpose.

Q. You have no memorandum on there about what you did with Nichols, Shepard & Company?

A. No, sir.

Q. Why didn't you make any memorandum of the arrangement you made with Nichols?

A. It wasn't necessary; I didn't think it was necessary.

Q. You began very soon afterwards to make a memorandum?

A. Well, I made a memorandum of transfer of expenses incurred in handling this invention; that is about all.

Q. What became of the notice that you paid Mr. Converse for drawing?

A. I served that on Nichols, Shepard & Company by leaving it with their book-keeper.

286 Q. Did you ever serve more than one in that way?

A. I never did; no, sir.

Q. Exhibit "7" was the one that you paid Mr. Converse for drawing?

A. I think likely it was; yes, sir; I judge so.

Q. Are you certain?

(Witness examines Exhibit "No. 7.")

A. No, I am not absolutely positive of it, but I think it must be the one; it corresponds with the date in my book.

Q. You served that one?

A. Yes, sir; I think I did; I am positive of——

Q. You never served any other one?

A. I never did; no, sir.

Redirect examination by Mr. PARKER:

Q. After you commenced the business of introducing this invention was it necessary to keep some accounts?

A. Yes, sir; it was.

Q. And this book (Exhibit 20) is principally a statement of accounts, is it not, in that business?

A. Yes, sir.

Q. And also of your movements during the time?

A. Yes, sir.

By the COURT: May I examine the book?

A. Yes, sir.

(Witness hands Exhibit No. "20" to the court.)

By Mr. PARKER:

Q. Before engaging in that business how were you employed?

A. I was employed in the fall of '79 by Nichols, Shepard & Company, and after that by the Battle Creek Machine Company.

287 Q. Were you employed up to the time that you went to put this reverse gear on by the Battle Creek Machine Company?

A. Yes, sir.
Q. Then you were engaged in that?
A. Yes, sir.
Q. And then subsequently you were engaged by Nichols, Shepard & Company to go with the engine?
A. Yes, sir.
Q. Then after you came back how were you engaged?
A. I worked three weeks in their shops in their factory.
Q. Nichols, Shepard & Company's shops?
A. Yes.
Q. And then what did you do?
A. Then I commenced the introduction of this device.
Q. About that time you got this book?
A. Yes, sir.
Q. I understand you?
A. Yes, sir.
By Mr. PARKER: That is all.
By Mr. BURTON: That is all.

EDWIN C. NICHOLS, complainant's witness, recalled, further testifies as follows, viz:

Cross-examination by Mr. PARKER:

Q. Mr. Nichols, did you have any conversation with Mr. Hoag soon after that engine went away to the fair, in 1880, about obtaining a patent for that stop plate?
A. Well, soon after that time. He spoke to me about it several times.
288 Q. Did you tell him that you would look the matter up by writing to Washington and ascertain if that patent could be obtained?
A. I think I did.
Q. Was it again talked over after the engine came back?
A. I think the conversation was after the engine came back, mostly.
Q. He claimed to have invented the same stop plate that was put on that engine, did he not, on that occasion?
A. He claimed to have applied and invented that stop plate—the one put on that engine.
Q. You testified in your former examination that the stop plate that was placed on it had two stops, as I understand you. I want to clear this up. It was a stop plate in the form of a standard, with a stop on the upper end and one on the lower end, one of which had a set-screw. Am I correct?
A. Well, my recollection of that stop plate is that it was not placed perpendicularly upon the boiler; that it was a piece of wrought iron forged, with a set-screw in one end of it only; and as I picture it to me it seems to me that it was not perpendicular by any means—rather more nearly horizontal.
Q. Perhaps I misunderstood you. I got that impression from your testimony. Who made the application for the patent?

A. Mr. Hoag.
Q. Before or after the assignment to Nichols, Shepard & Company?
A. Before.
Q. Was it assigned after the application was made and before the issue of the patent?
289 A. I think before the issue of the patent.
Q. So that the patent issued to you?
A. As his assignee.
Q. As his assignee?
A. Yes. I suppose you mean, when you say "to you," you mean Nichols, Shepard & Company?
COUNSEL: Yes; I mean Nichols, Shepard & Company, unless I distinguish it. After the decision of the interference case involving the stop plate did you take any further proceeding or Nichols, Shepard & Company take any further proceedings?
A. Yes.
Q. To reopen that again?
A. Then instituted a suit between the two patents.
Q. In the supreme court for the District of Columbia?
A. Yes, sir; in Washington.
Q. Which suit is now pending?
A. Now pending.
Q. Who was your solicitor in that case—who was the solicitor of record?

By Mr. BURTON: I object to it as immaterial.

A. Really I don't know.
Q. Isn't it Mr. Tolman?
A. I do not know. I sent the case to Mr. Mahon. I do not know who is the solicitor of record.
Q. Do you know Mr. Tolman?
A. I do not.
Q. H. A. Tolman I think his name is.
A. No, sir.
Q. Ever saw him?
290 A. I never saw him; never had any correspondence with him.

ELON A. MARSH, defendants' witness, recalled, further testifies as follows, viz:

Direct examination by Mr. PARKER:

Q. Do you know Mr. H. A. Tolman?
A. I do.
Q. Of Washington, D. C.
A. Yes, sir.
Q. Did he have anything to do with your interference case?
A. Yes, sir.
Q. In what capacity?

By Mr. BURTON: I object.

A. He was attorney for us in that case.

MINARD LA FEVER, a witness produced, sworn, and examined on the part of defendants, testifies as follows, viz:

Direct examination by Mr. PARKER:

Q. Where do you reside, Mr. La Fever?
A. In Battle Creek, Michigan.
Q. Do you know Mr. Marsh?
A. Yes, sir.
Q. Mr. E. C. Nichols?
A. Yes, sir.
Q. Also Mr. Scott?
A. Yes, sir.
Q. What is your age?
A. Thirty-eight.

Q. Do you know this valve gear that is in controversy?
291 A. Yes, sir.
Q. You have an interest in it, have you?
A. I have.
Q. When did you first obtain that or about when?
A. I obtained an interest in September, 1880, the latter part of September.
Q. What was that interest?
A. One-half interest in the invention.
Q. Subsequently you parted with a portion of that?
A. Yes, sir.
Q. You and Mr. Marsh sold one-third to Mr. Scott?
A. We sold one-third to Mr. Scott.
Q. That was when—about; in March, '81?
A. That was in March following, '81.
Q. How long have you known Mr. Marsh?
A. O, I have known Mr. Marsh ten years at least.
Q. How long have you known about this reverse gear?
A. From its first inception—1879—December.
Q. How well acquainted were you with its development and the invention?
A. Well, I was thoroughly acquainted with the development.
Q. Do you recollect its application to what has been termed the Moon engine?
A. Yes, sir.
Q. An engine that was in the Moon newspaper office?

A. Yes, sir.
292 Q. Were you acquainted with its application to the engine at Nichols, Shepard & Company's shops?
A. I was.
Q. Did you see it applied at all?
A. I did not; I saw it after it was applied.
Q. You knew of its being applied?
A. I did. Mr. Marsh related the progress of the invention to me nearly every day or every evening, rather.
Q. You were then contemplating taking an interest, I presume?
A. Not at that time.

Q. When did you first contemplate taking an interest in it?
A. After it was applied and tested.
Q. Do you know where that engine went to?
A. It went to several Western fairs—Springfield and St. Louis.
Q. When did you first see it?
A. I saw it on Sunday following the application of the device to the engine—after it was painted, I think.
Q. Before it went off?
A. Before it went away to the fairs; yes, sir.
Q. Do you know Andrew J. Hoag?
A. I did.
Q. What is your business?
A. I am a machinist.
Q. Present business?
A. The same. Well, I am now foreman of the engine department in Case & Willard's Thresher Company of Battle Creek.

Q. What was your business at that time?
293 A. At that time I was foreman of R. B. Merritt's shop, at Battle Creek. At the time the application was made, do you mean?

COUNSEL: Yes.
WITNESS: Yes, sir.

Q. How long had you been a machinist at that time?
A. About fourteen years.
Q. When did you first see Mr. Nichols about this matter?
A. November, 1880.
Q. About what time in November?
A. About the 7th of November.
Q. How came you to see him then? Just state the circumstances.
A. He extended an invitation to Mr. Marsh and also myself. We saw him at his residence. He indicated that——
Q. Go on and state all that occurred at that interview. State it from the beginning—the progress of the conversation, how it terminated, and all that occurred.
A. Well, Mr. Nichols said that he invited Marsh there to talk about the matter of the reverse gear. As he had his interest in consideration—Marsh's interest, rather—he would like to see him succeed, and that he had had experience in various patent cases which would be of benefit to Mr. Marsh; also the difficulty of obtaining patents—to sustain patents; that his experience had been large in that direction, and unless you belonged to a pool of manufacturers dealing in patents that it was difficult to maintain a patent, even if you secured it. He related at that time that he belonged to
294 a pool that paid an attorney ten thousand dollars a year to look after the interest of this pool, dealing, I suppose, in agricultural machinery inventions.
Q. Did he say who the members of the pool were?
A. I don't recollect that he did. The conversation was rather extensive in that direction. He intimated, though—in fact, said—that

he had no desire to obtain an interest; in fact, he wouldn't go across the street for an interest.

Q. An interest in what?

A. In this invention of Marsh's. He didn't think that his people would use it. His whole object in having Marsh come there was to benefit him with advice, &c.

Q. He was very disinterested?

A. Very disinterested; yes, sir. He pictured the lack of necessity to him becoming interested in the invention, because he had sufficient income, and he called our attention to his magnificent residence, &c.; that we could see—plainly see—that he didn't need any interest in it or any further income than he had; it was wholly for our interest, and especially for Mr. Marsh's interest. Well, we let him do the most of the talking and listened attentively. He finally said that he could tell us how we could conduct that affair in a manner that would be to our interest. He would recommend, or words to that effect, that we allow some institution like J. I. Case, who is a large threshing-machine manufacturer and rich, to handle the matter—handle the invention—procure patents, fortify it with other inventions and capital. He went on in that strain. We supposed at that time he meant Nichols, Shepard & Co. instead of J. I. Case, but that didn't make any difference. We was very glad to receive
295 the advice, because at that time the entire business was new to us, and especially to me. I retired.

Q. What, if anything, was said with reference to his being able to make or break the patent if you obtained one?

WITNESS: At that time?

COUNSEL: At that time.

By Mr. BURTON: I object to it as immaterial.

A. It was said at an interview, but not at that interview, I think.

By Mr. PARKER:

Q. Do you know whether he knew at that time that Marsh had applied for a patent?

A. I think he did. It was several months after Marsh had applied for the patent the interview was.

Q. Do you know what he said—whether he knew?

A. O, yes; he was well acquainted with the facts, the transactions that Marsh had passed through relating to his application for a patent, &c.; in fact, at that time Mr. Marsh had met with two objections in the Patent Office. The case was at a temporary standstill at that time, or shortly previous to that. As soon as I came interested in it—that was a month before that—that portion of the matter——

Q. I call your attention especially to the point of whether or not there was anything said about any right on the part of Nichols, Shepard & Company to use the device.

(Complainant's counsel objects as leading.)

A. No, sir; there was nothing said; in fact, he said they didn't

care to use it; nothing that led us to think that they ever contemplated using it from what Mr. Nichols suggested.

296 Q. Did he claim to have the right to use it?

A. No, sir.

Q. If he wanted to?

A. No, sir; he did not.

Q. When did you next see Mr. Nichols?

A. Mr. Nichols called at the shop in which I was engaged the following Thursday—that was about November 11th—and had an interview with me. After inquiring for Mr. Marsh, Mr. Marsh not being present, he said that I would do as well. He inquired of me what we intended to do in the matter—the matter of procuring a patent on this invention; wanted to know if we intended to go on in the direction we had started or whether we was going to throw the matter up or let Nichols, Shepard & Company conduct it. Well, that question was rather startling to me; in fact, I never met Mr. Nichols before the other occasion a few days previous, and he made no manifestation of a desire of him or his company conducting our affairs. The question was rather startling; in fact, the manner in which he asked the question irritated me some, and I told him we proposed to conduct our own affairs.

I couldn't imagine why he would ask me that question. That irritated him; then he said, "You can't get a patent." Well, I desired to know why we couldn't, because as he was solicitous a few days before in Marsh's interest if we couldn't get a patent, and he knew why it would be to our interest to know. When I pressed that question he remarked, "If you do get a patent it won't be good for anything." I wanted to know why it wouldn't. He said because it wouldn't. He finally said that he investigated the

297 matter, and he knew that the patent would not be good if we got it. Well, that substantially ended the interview.

Q. Was that all that occurred on that occasion?

A. No, sir; during the conversation he said if they desired to use it they would use it, anyway, and, in fact, he says, We intend to commence next week to use it, are making preparations, and are going right on to apply the device.

Q. This, you say, was about the eleventh?

A. That was about the eleventh of November. The first interview was Sunday evening; the second one was Thursday afternoon.

Q. What reply did you make to that statement of his, that they were going to use it?

A. I don't recollect now as I made any reply.

Q. What was said about his having any right to use it, if anything?

A. Not anything.

Q. Anything said about Marsh having given him a right?

A. No, sir.

Q. When did you next see him?

A. I next saw Mr. Nichols the following spring.

Q. Before going into that I will ask you where Marsh was during December and January, of '80 and '81.

A. Mr. Marsh in December visited the Gaar-Scott manufactory, at Richmond, Indiana.

By the COURT: I suppose the point is whether he was in Battle Creek or not.

By Mr. PARKER:

Q. Was he in Battle Creek?

A. No; he was not—that is, the greater portion of the time
298 he was away from Battle Creek, in both December and January. He was there a day or two through the holidays.

Q. What business was he following?

A. He was endeavoring to induce people to apply this reversing device of his.

Q. Do you remember when the patent was issued?

A. Patent issued December twenty-eight, 1880.

Q. Do you know anything about any notice that was sent to Nichols, Shepard & Company in regard to that?

A. Yes, sir; I sent a notice to Nichols, Shepard & Company immediately after we had notice that the patent was issued.

Q. Was that notice in writing?

A. It was in writing; yes, sir.

Q. Did you keep a copy of it?

A. Well, I attempted to, but it disappeared.

By Mr. PARKER: Will you produce the notice? Do you want a formal notice to produce it?

Q. What was that notice?

By Mr. BURTON: I object to it until there is a better foundation for it.

A. I notified Nichols, Shepard & Company.

By Mr. PARKER:

Q. Have you looked for the copy?

A. Yes, sir; I looked for it last night.

Q. Did you find it?

A. No, sir; I did not.

Q. When did you see it there?

A, Well, my recollection is indefinite. I recollect occasionally seeing it amongst my papers. Not considering it of any im-
299 portance, I didn't impress it on my mind to recollect well enough just when I saw it last. I didn't consider it a matter of any importance. We served two or three notices on them.

Q. How was that served?

WITNESS: This one?

COUNSEL: Yes.

A. That was sent from the post office in the presence of a witness.

Q. How was it addressed?

A. Addressed to the company—Nichols, Shepard & Company.

Q. Battle Creek, Michigan?

A. Yes, sir.
Q. Postage paid?
A. Yes, sir; supposed it to be, as near as I can recollect.
By Mr. PARKER: Defendants' counsel requests complainants to produce the notice, and asks them if they will produce it. I understand you to say you have never received it.

By Mr. PARKER:

Q. I ask you if you recollect what that contained.

By Mr. BURTON: I object to it as entirely immaterial and incompetent.

A. I notified Nichols, Shepard & Company that Marsh and La Fever had received notice of the issuance of the patent relating to that reverse gear; that they would notify them to discontinue the manufacture and use unless satisfactory arrangements were made with us for its application or manufacture by the said company.
That is the substance of what I wrote them. I copied no form.
300 It is simply what occurred to me at the time. That notice was placed in the office in the presence of James Adams. At the time I dropped the envelope in I called his attention to it.
Q. Placed in the office at Battle Creek?
A. Yes, sir.
Q. Did you hear anything from them?
A. I did not.
Q. What next was done in the way of notice?
A. Well, there was another notice. There was a formal notice served on the company on account of receiving no response to the previous one. That Mr. Marsh served himself.
Q. Did you see that notice before it went?

(Witness examined Exhibit No. "7.")

A. Yes, sir.
Q. Is that it?
A. I think that notice was drawn up by Martin Metcalf.
Q. Is that the notice?
A. Yes, sir.
Q. When did you first become acquainted or have anything to do with Mr. Converse in this matter?
A. The first business we did with Mr. Converse was immediately after I became interested in the invention. That was of short duration, though. He simply made out the necessary papers or paper of a transfer of Mr. Marsh's half interest to me.
Q. Was he consulted with reference to a notice?
A. Not at that time?

(Complainants object as leading.)

Q. At a subsequent time?
A. Yes, sir; later.
Q. Was he consulted with reference to this notice "No. 7"?

301 A. I don't think he was. I couldn't see the necessity of consulting two attorneys about that notice. Mr. Metcalf, I am quite sure, drew that notice up himself.

Q. When did you next see Mr. Nichols?

A. I next saw Mr. Nichols at the shops of R. B. Merritt. He called there and solicited an interview with Mr. Marsh and myself, and we agreed to meet him at the City Bank or the National Bank at Battle Creek?

Q. Well, did you meet him?

A. Yes, sir; we did.

Q. What occurred at that meeting?

A. Mr. Nichols signified that he had some startling developments to make which, when we heard, would tend to check us in our mad career, I guess. He had an opinion of a Washington expert, copies of several English patents relating to steam-engine valve gear, and then an opinion of his own. We examined the different copies of the patents and the opinion of the expert; he read it—extracts from that—to us. We, after examining the copies of the patents, told Mr. Nichols that we had anticipated him about six months, because we had had copies ourselves, and he was somewhat disappointed apparently. He then went on on another tack; attempted, what I would call, bulldozing; that we hadn't money enough to compel him to pay for the invention; in fact, his people would spend twenty-five thousand dollars to defeat our aims.

Q. He argued your patent was worthless?

A. Yes, sir. He has always argued that at all interviews, that our patent was worthless.

302 Q. What, if anything, was said about any right Nichols, Shepard & Company had by an arrangement with Mr. Marsh?

A. Not anything.

Q. Was that ever named in your presence?

A. That never was breathed in my presence by any one up to a recent date. I say "recent," I mean in comparison with the length of the litigation; within a year or so, or at the time the Scott suit had commenced.

Q. Up to that time?

A. Yes, sir.

Q. Was the interview before or after the service of that notice, Exhibit "7?"

A. It was after the service of the notice.

Q. Do you remember anything about Marsh's presenting a license to Nichols to be signed?

A. I recollect that Mr. Marsh claimed that he did.

Q. Do you recollect the circumstances that at the time there was something of that kind?

A. Yes, sir. I recollect the circumstances of Mr. Marsh going to Mr. Nichols' residence, and that Marsh related to me the substance of the interview of what transpired.

Q. Was that before or after this notice?

A. That was after the first notice; that was about the first of

February or at the beginning of the month; shortly after Mr. Marsh returned from his second trip in introducing this invention, the winter of 1881.

Q. Was it this notice, Exhibit "7?"

A. I think it was. I think this notice is the outgrowth of that interview.

303 Q. As a result of that you sent this notice, you mean?

A. Yes; this notice is the result of that interview.

Q. How long did that interview last at the First National Bank?

A. Perhaps half an hour.

Q. How long after that notice was that interview, as near as you can fix it—after that notice, Exhibit "7?"

A. I think that was in the following spring; April, I think. I can't fix the date exactly.

Q. Do you remember sending Mr. Converse to him?

A. Yes, sir; I do.

Q. About this matter? Was it before or after that?

A. The interview was before we sent Mr. Converse to see Mr. Nichols.

Q. Was it before or after Mr. Scott obtained an interest in the matter?

A. It was after.

Q. You sent Mr. Converse to see him?

A. Yes, sir.

Q. As your attorney? Did he report to you?

A. He did.

Q. How?

A. Well, he called at the shop, and Mr. Marsh—at the shop that I worked at—and reported the result of the interview.

Q. What did he say that Mr. Nichols said?

A. Well, he said quite a good deal. He said that Mr.

304 Nichols became indignant. The object of sending Mr. Converse to see Mr. Nichols in the first place, I will say, was to notify Nichols, Shepard & Company unless they came to an amicable settlement Marsh and La Fever should proceed to commence suit in the United States court for infringement. That was the object of sending Mr. Converse there. Mr. Nichols became indignant; refused to make any settlement that would be satisfactory to us. As the interview was shortly afterwards put in writing, why I never attempted to impress it on my memory, because I could refer to that. It is an exhibit here. In fact, there was two interviews. The first interview we sent Mr. Converse there.

Q. Confine yourself to the first one.

A. Yes, sir.

Q. Did he report to you that Mr. Nichols said that Mr. Marsh had given them the right to use that device?

A. No, sir; he did not.

Q. How long after was this interview or the substance of it put in writing?

A. Within a week, I should think.

Q. This "Exhibit 11" is the paper or portion of it?

(Witness examines "Exhibit No. 11.")

A. Yes, sir; that is the document.

Q. Did he have any other interviews with Mr. Nichols?

A. Mr. Nichols called on Mr. Converse the second interview, and wanted to know what he had concluded to do, supposing, I suppose, that Mr. Converse had reported to us and we had reconsidered the matter, perhaps, of deciding to let him conduct the affair. That interview was also detailed in writing.

305 Q. You were not present at it?

A. Not present; no, sir.

Q. Did Mr. Converse report to you orally?

A. He did; he told us Mr. Nichols had called there and the substance of the interview.

Q. Was there anything said by him that Mr. Nichols claimed that Mr. Marsh had given them any rights?

A. No, sir; there wasn't.

Q. Any intimation of that kind?

A. Nothing whatever.

Q. Was there any statement by him that Mr. Nichols claimed to have any rights by virtue of Mr. Marsh parting with that valve gear?

A. No, sir.

Q. Was there in the first interview anything of that kind?

A. Nothing that I ever heard of; in fact, at the second interview I think he went so far as to say that he would like to see J. I. Case, Gaar Scott, and other folks pay for the invention, but that Nichols and Shepard wouldn't pay for it.

Q. Did Mr. Converse tell you the reason why they wouldn't pay for it?

By Mr. HILL: I interpose an objection here for the purpose of calling counsel's attention to the fact that if he goes into these professional communications between Mr. Converse and his client he certainly throws the door open, so that we can put Mr. Converse upon the stand and draw out the whole of this matter. Mr. Converse is the defendants' witness in regard to it. I make the objection for the purpose of notifying counsel that we shall call Mr. Converse in regard to these matters if he persists in this examination.

306 By Mr. PARKER: I will withdraw the question.

Q. Did you have any further interview with Mr. Nichols?

A. Yes, sir; we did.

Q. How soon after that one?

A. Well, it was shortly after that. We met Mr. Nichols at Mr. Converse's office.

Q. Who was present?

A. Mr. Scott, Mr. Marsh, Mr. Converse, and Mr. Nichols, in addition to myself.

Q. What occurred at that interview?

A. At that interview Mr. Nichols related that he had discovered

or he wanted to know if we knew that our patent was invalid, of no account, on account of the lack of signature. That was the time to remedy the defect by, in fact, covering it up, by conceding them the right to use the invention; in fact, we were to—as I understood it, they would be willing to help us cover that up; in fact, make other builders pay for something which he claimed was invalid; that's the way I looked at it. He was willing, apparently, at that interview to conspire with us to make other builders pay for something which he said we didn't own; that is the proceedings of that interview.

Q. If you would give him a shop right?

A. Yes, sir; if we would give them a shop right, that was the time to cover that up.

Q. Was there anything said about any right or claim made by him about any right he had obtained from Marsh to use it?

A. Nothing whatever; nothing was said about any right to use the invention. When I say that I mean, of course, any con-
307 ceded right by Mr. Marsh or myself. Of course I didn't know that he had a right to use it.

Q. On what account?

A. Well, on account that he had related—that is, different testimony that he applied it to the first engine, &c., but no conceded right. There never was anything said to that effect in my presence.

Q. What claim was ever made, that you knew of, of any agreement made with Mr. Marsh at the time of that application?

WITNESS: I don't think I understand your question.

Q. What claim was made by Mr. Nichols or Nichols, Shepard & Company of any agreement—and, if so, what—at the time that Marsh put the reverse gear on the engine?

WITNESS: What claim was made at that time?

Q. What claim was made by him at any time of any agreement that Marsh made at the time he put the valve gear on the engine?

A. The first substantial notice that I ever heard that he made a claim was at the time Mr. Scott's affidavit was published.

Q. Did you ever hear Mr. Nichols make any claim that there was any agreement about that?

A. No, sir; I never did. I never came in contact with Mr. Nichols, except at those interviews.

Q. What claim, if any, was made to the right to use it because the invention or the patent was invalid or Mr. Marsh had no right to the invention? Was there any claim of that kind made?

A. Not that I know of.

Q. Did you have any conversation with Mr. Hoag about this gear at any time?

308 A. I never spoke to Mr. Hoag about the reverse gear.

Q. This second or last interview at Mr. Converse's office was after the original suit in Detroit had been begun?

A. Yes, sir.

Q. Application was made to Congress afterwards, was there, for an act removing the cloud from that patent?

A. Yes, sir; there was.

Q. Mr. Marsh went down there at that time?
A. Mr. Marsh was out there several times for that purpose.
Q. Did you have an interview with Mr. Scott at the Lewis House shortly after the decision of the first case at Detroit?
A. Yes, sir; we did.
Q. Who was present?
A. Mr. Marsh, Mr. Metcalf, Mr. Scott, and yourself.
Q. Do you know whether or not the opinion or copy of the opinion that Judge Brown rendered in that case was there?
A. It was.
Q. Do you know whether Mr. Scott had access to it?
A. I know that Mr. Scott carried it around about a week with him.
Q. State whether or not you received a copy of the opinion before that interview.
A. Yes, sir; we did.
Q. Was that shown to Mr. Scott?
A. Yes, sir; that was in Mr. Scott's possession several days.
309 Q. How fully was the matter talked over in that interview?
A. I don't know anything else we could have said on the subject.
Q. The matter was covered?
A. Covered entirely.
Q. Did you see the article in the paper containing extracts from his affidavit?
A. Yes, sir; I did.
Q. I show you Exhibit "13." Is that the article, entitled "A chapter of history?"

(Witness examines Exhibit No. "13.")

A. Yes, sir.
Q. Do you know Mr. H. A. Tolman, of Washington?
A. Only by reputation.
Q. What, if anything, did he have to do with your interference case?
A. He was engaged on our side of the case more than two years; part of the time as principal attorney in the case.
Q. Suit has been begun in the supreme court of the District of Columbia against you as between those two patents and the use of it?
A. Yes, sir.
Q. Do you know whether he appears in that case or not?
A. He appears on the opposite side of the case, on behalf of Nichols, Shepard & Company.

Cross-examination by Mr. HILL:

Q. At those interviews at the Lewis House, when Mr. Parker was present to advise you at that time that the claim had entirely
310 been overcome by the signature of the Commissioner of Patents—acting Commissioner of Patents—to Exhibit "A," the

patent having been withdrawn and sent down to Washington to have the error corrected, did he not?

WITNESS: Advised us that it had been entirely broke, did you say?

COUNSEL: Yes.

A. I have no recollection that he did.

Q. What did he advise you about on that occasion?

A. His view of the matter was that he thought that would remedy the defect.

Q. All you had to do was to begin another suit on that patent. That is what he told you, wasn't it?

A. No; I don't know that he said that is all we would have to do. He advised us to begin another suit.

Q. Now, Mr. La Fever, this paper you saw at the time it was written, did you?

(Witness examines Exhibit No. "11.")

A. Yes, sir; I saw Mr. Converse write it.

Q. You say you read it at that time. Did you carefully? Exhibit "11."

A. Yes, sir.

Q. Then he told you that there had been an understanding that Nichols, Shepard & Company and Marsh were to handle the device together, but that Marsh had gotten the big head and no one could do anything with him, did he not?

A. He told us everything that is in that paper.

Q. He told you about the agreement between Marsh and Nichols, Shepard & Company, didn't he?

WITNESS: The agreement?

311 COUNSEL: Yes.

A. There wasn't any.

Q. He stated Nichols said there was?

A. He alleged there was——

Q. You learned about it at that time?

A. I learned. I didn't know that was in that paper.

Q. You learned about the agreement at that time?

A. No, sir.

Q. You learned that Mr. Nichols claimed that there was an agreement at that time, didn't you?

A. Yes.

Q. This is dated April 26th, '81?

A. Yes.

Q. Was that the time when it was written? When did he make a memorandum of the fact?

A. I don't recollect whether that is the date it was written or the date of the interview; it was very close together; within a few days.

Q. Was that approved by Mr. Converse that Mr. Nichols claimed that there had been an agreement between him and Mr. Marsh?

A. Yes; that Mr. Nichols claimed——

Q. He claimed it at that time?
A. Yes.
Q. You testified in the case of Scott against yourself and Marsh, in the superior court of Cook county?
A. I did.
Q. In open court and before a master in an interlocutory decree?
A. Yes, sir.
312 Q. You stated there, did you not, that you had received royalties to the amount of five thousand one hundred and fifty-five dollars?

By Mr. PARKER: I object to it as immaterial.

A. I don't recollect whether I did or not; we had books there; it was figured up.
Q. You testified from the books at that time, did you not?
A. Yes, sir.
Q. This question was put to you by Mr. Codding, was it? Now, Mr. La Fever, in regard to the royalties received, how much have you received and what was done with the money—the royalties? Your answer was, Well, understand me, I say I would have to refer to the books.
A. I think that is my answer.
Q. Question. Very well; any way to get at it. Your answer, The total amount is five thousand one hundred and fifty-five dollars. That you stated, did you not?
A. I think I did.
Q. What royalties have you received since then?

By Mr. PARKER: I object to it as incompetent.

A. Well, we have received several hundred dollars; the exact amount I don't know.
Q. In round numbers?

By Mr. PARKER: Why do you go into this?
By Mr. HILL: I don't know as there is any reason why I should argue it.
By Mr. PARKER: I don't see any reason why you should go into the business of these parties. I don't see any possible bearing it has on this case. It looks to me very much like fishing.
313 By the COURT: Take the answer.

(Last question repeated.)

By Mr. PARKER: The answer is taken under protest.

A. In the neighborhood of seven hundred dollars.
Q. That is, the royalties received from the licensees?
A. Yes, sir.
Q. On the patents from those licensees?
A. Yes, sir; they are in my possession.
Q. Have you the licenses that have been taken out since the first patent was issued?
A. Since the patent first was issued?

Q. By manufacturers.
A. Yes, sir.
Q. Can you name the manufacturers?
A. I can.
Q. Please do.

WITNESS: You mean the manufacturers that have taken out licenses for royalty?

COUNSEL: They have taken out licenses for royalty.

By the COURT: I don't see the object of this. Perhaps you do.

By Mr. PARKER: Merely as bearing upon his own case in Chicago.

By Mr. HILL: The object is to show the benefit derived from the bringing out and development of the invention; that under the agreement they received a consideration, and it goes to the consideration of the agreement.

By the COURT: Take the answer.

By Mr. HILL: We don't care particularly about the answer; we will waive it.

314 Redirect examination by Mr. PARKER:

Q. Mr. La Fever, what damage has the opposition of Nichols, Shepard & Company to your claims done you in your business in introducing and handling this valve gear?

By Mr. BURTON: I object to that.

A. I should think it had damaged fully thirty thousand dollars.
Q. Do you know of any manufacturers who have not manufactured in consequence of the opposition to the patent?
A. We are well informed that there are several that refrain from using it on that ground.
Q. Do you know of any that have refused to go on with a license in consequence of the attitude that complainant has taken in regard to the Hoag patent?
A. Well, indirectly we do.
Q. Have you been so informed by the manufacturers?

By Mr. HILL: I object to it as hearsay.

A. I never was.

By the COURT: The supreme court may be interested in this testimony. I certainly am not.

EDWIN C. NICHOLS, complainant's witness, recalled, further testifies as follows, viz:

Cross-examination by Mr. PARKER:

Q. Nichols, Shepard & Company have been manufacturing and using this valve gear from the time it was first put on or from the beginning of '81 up to the present time, have they not?
A. They have, sir.
315 Q. How many engines upon which it has been placed, as near as you can tell?

A. I can tell only approximately.
Q. About how many?
A. Probably six or seven hundred engines.
Q. What is the expense of making one?

WITNESS: Do you mean the entire expense—the reversing device and this attachment?
COUNSEL: I mean the reversing device as Marsh made it, or substantially the same—about the same thing—and attaching it.

A. I think that estimate of the reversing device, including the quadrant and lever, costs us about twenty-five dollars as we make it and apply it.
Q. As you make it?
A. Yes.
Q. That includes the invention you make under the Hoag patent?
A. That includes the reversing device, including the stop, of course, and quadrant and the necessary work and expense of applying and putting it in shape upon the boiler. I estimate it at about twenty to twenty-five dollars.
Q. This device is a valuable one, is it not?
A. I consider it a very good device.
Q. Do you know Martin Metcalf?
A. Yes, sir.
Q. Did you make some affidavits in the interference case, based upon Mr. Metcalf's statement?
A. Yes, sir.
Q. On a motion to reopen, or rather to postpone the issuing of the patent?
A. An affidavit for reopening the case, I think, was it not?
316 COUNSEL: Yes.
A. Yes.
Q. Mr. Converse made some also at the same time?
A. I suppose so; I am not personally sure of it.

Redirect examination by Mr. HILL:

Q. Mr. Nichols, what was the value of the engine with the valve gear upon it—the whole thing—the traction engine that went to the fair?
A. About twelve hundred dollars.

By Mr. PARKER:

Q. That was your retail price, was it not?
A. Yes.
By Mr. PARKER: That includes manufacturer's profit?
A. That is the retail price.

By Mr. PARKER:

Q. Doesn't it include manufacturer's profit?
A. If he gets any.

MINARD LA FEVER, defendants' witness, recalled, further testifies as follows, viz:

Direct examination by Mr. PARKER:

Q. Have you been engaged in applying these reverse gears?
A. Yes, sir.; I have.
Q. For how long?
A. More than three years.
Q. Do you know what the cost of making them is and attaching to the engine?
A. The cost of the bare device itself is five dollars.
Q. What would it cost to put them on the engine?
317 A. The whole device can be seen at Case & Willard's in good, substantial shape, and the cost is less than ten dollars, including everything.
Q. That includes everything?
A. Everything.
Q. That is the cost?
A. That is the cost of the entire reversing device. The cost of the device itself is not more than five dollars.
Q. What is the additional five dollars?
A. Why, it is the reverse lever, quadrant, reach rod, and the necessary attachment which you have to have in any reverse device; that, of course, is not included in the cost of the Marsh reversing device. Any device has to have some plan to operate it; consequently we can't consider that as the cost of manufacturing the Marsh device. The bare cost of the device itself in a good, substantial mechanical shape is a little less than five dollars, taking each item and its cost and the labor that I know of; I have figured it right down fine. The Russell Manufacturing Company——
Q. It was even less than five dollars?

By Mr. HILL: We object to the question as above.
Q. What is the cost of the link reversing device?
A. The "link," put on in the cheapest possible manner, would cost fully twenty dollars; from that sum up to fifty.
Q. That is the device in common use, is it not?
A. Yes, sir.
Q. In proportion how does this compare with the "link" and that class of engine; is it better?
A. It is better than the link in several respects.
Q. You may name them.
318 A. First is the simplicity of the device in view of a less number of parts of the movements of the device from that of rotary instead of oscillating movements; sliding motions; it is positive under all conditions, which the link is not if it is not well oiled, and it is quicker in its operation; the engine responds quicker.

Cross-examination by Mr. HILL:

Q. Do you base your estimate of cost upon steel gears or cast gears?

A. Cast-iron gears.

Q. As you make them?

A. Yes, sir.

Q. Do you know whether Nichols, Shepard and Company use steel?

A. Only by hearsay.

Q. You know nothing about it?

A. I know nothing about —.

Redirect examination by Mr. PARKER:

Q. What would be the difference between cast steel and cast iron with modern appliances for cutting gear?

A. The difference would be very slight.

Q. The gears are cast when they are made with steel?

A. They are cast blank, turned out, and cut in a gear-cutter.

Q. There is a slight difference in the cost?

A. There is a slight difference; probably not more than twenty five per cent. It wouldn't exceed that in the cost of the gear itself, the two wheels.

By Mr. PARKER: I suppose if there is any rebutting testimony it might go on; I have some papers to put in which I would like to put in order.

319 By Mr. HILL: This closes your oral testimony?

By Mr. PARKER: Yes, sir.

Rebutting Testimony.

S. D. WHITTAKER, a witness produced, sworn, and examined on the part of complainants, testifies as follows, viz:

Direct examination by Mr. HILL:

Q. What is your name, age, residence, and occupation?

A. S. D. Whittaker. My age?

COUNSEL: Yes.

A. Aged forty years.

Q. Residence?

A. Township of Le Roy, in this county.

Q. What is your occupation?

A. Well, threshing is principally my occupation. I have farmed a little on a limited scale.

Q. You know the plaintiff in this suit, Nichols, Shepard & Company?

A. Yes, sir.

Q. You know Mr. E. C. Nichols, of that corporation?

A. Yes, sir.

Q. Do you know the defendants here, Elon A. Marsh and Minard La Fever?

A. Yes, sir; I am acquainted with both of them. I have seen them in the shop to work.

Q. And Mr. James Scott—do you know him?

A. No; I am not acquainted with him—Mr. Scott—personally. I think I have seen him several times.

320 Q. Ever purchased any machinery of Nichols, Shepard & Company?

A. Yes, sir.

Q. Did you ever hear of a device known as "the Marsh reversing engine valve gear"?

A. Yes, sir.

Q. Ever have any conversation with Mr. Marsh in regard to it?

A. I have.

Q. When and where?

A. Well, it was in June some time in '83. I met Mr. Marsh on East Main street, Battle Creek. As I was passing by him he stopped me and said he understood I was talking of buying an engine up to Nichols, Shepard & Company. He wanted to know if I was going to have the Marsh gear. My reply to him was I didn't know whether Marsh or Mr. Nichols' gear. Whichever one it was I was going to have the gear that worked with a pinion. I made the reply I was sick of the old link motion. I had an engine at that time with the link motion on it; and he said the reason he spoke to me about it was, he said, he claimed that patent, as they had no right to use it; if I bought an engine that either I or they or Nichols—that is the way he said it—would have to pay them a royalty on it; he didn't want to make me any trouble; I had better see that they gave me a written guaranty that they would stand between me and all harm on the engine if I bought it; and I made the reply to him that I thought I knew the parties I was dealing with, and that I didn't propose to buy anything but what I knew it was right, as I had once paid a royalty of a hundred dollars on a clover-huller to Mr. Birsell, of South Bend. That was it.

321 Q. Did you buy the engine?

A. Yes, sir; I bought the engine.

Q. Did you require a guarantee on account of that conversation from Mr. Nichols?

A. I did; I spoke to Mr. Nichols on the day I took the engine away from the shop.

Q. He gave you a guarantee?

A. Yes, sir; he said he would indemnify me between—he would stand between me and Mr. Marsh and all harm. He would make me good.

By Mr. Hill: I call the attention of the court that we have not read our depositions. We will offer them; also exhibits we have not read.

By the Court: Does that close the oral proof?

By Mr. Hill: That closes the oral proof on our side, your honor. Mr. Converse will be here at two o'clock, at the opening of the session this afternoon. We have a few questions.

By the COURT: Perhaps it would be well to read your depositions at this time, unless you prefer to do it at the hearing?

By Mr. BURTON: I don't suppose it makes much difference.

By Mr. HILL: I think we can state the depositions. They are only as to some collateral matters.

By Mr. PARKER: I offer in evidence the original letters patent granted to Marsh, dated December 28th, 1880, No. 236,052. Of course, these are important papers, and this is an exhibit in the United States court. I would like to have it marked for identification, with the privilege of putting in a certified copy.

By the COURT: I presume there will be no objection to that.

(Said document marked Exhibit "25.")

322 CHARLES F. BURTON, a witness produced, sworn, and examined on the part of the complainants, testifies as follows, viz:

Direct examination by Mr. HILL:

Q. You are the solicitor for the complainant in this suit, are you?

A. I am.

Q. You have been solicitor for the complainant in the defense of the suits commenced in the city of Detroit in the United States court?

A. I was counsel for the first one; I have been solicitor in the other.

Q. Do you remember of Mr. Marsh's being in Detroit on some occasion when you had a conversation with him in regard to the pendency of the suit?

A. I remember the time that he was there; that he testified to yesterday.

Q. Do you remember of saying to him, that you felt convinced—that you said that Mr. Nichols felt convinced that he was more than half wrong, and it was hurting his reputation very badly?

A. No, sir.

Q. Did you say anything of the kind to him?

A. No, sir.

Q. Have you any explanation you desire to make in regard to that matter? If so, please make it.

A. Mr. Marsh came into the office. Mr. Parker and I have our offices in the same suit of rooms, general partners in the law business, and I supposed he came in to see Mr. Parker. During the time that he was there I saw him and had considerable conversation with him on general matters. Mr. Nichols had been there a few
323 days before that and had had some talk with both myself and Mr. Parker, and at that time I thought if the parties could be brought together that an adjustment of the difficulties between them might be arrived at, and I told Mr. Marsh that, and rather urged him to see Mr. Nichols—see if an adjustment couldn't be brought about.

Q. That was all you said?

A. That was the substance of it. The conversation was quite long. The interview on all the matters was quite long. We had

some talk about other matters entirely foreign to this. I think Mr. Marsh at that time made some investigations in regard to the matter of some mechanism—made preparations for giving some expert testimony.

Q. You heard Mr. Nichols' testimony in regard to his consultation with you in regard to the defense of the first infringement suit brought by Marsh, La Fever, and Scott against Nichols, Shepard & Company, did you not?

A. I did.

Q. What, if anything, have you to say in regard to his consultation and your counsel in regard to the agreement for a shop right?

By Mr. PARKER: I object.

By Mr. BURTON:

Q. Whether the testimony of Mr. Nichols was substantially the same in that regard?

By Mr. PARKER:

Q. Were you Mr. Nichols' counsel at that time?

A. I suppose I was holding a conversation preparatory to preparing his defense.

By Mr. PARKER: I object to it on two grounds: The principal ground is that a party can't make evidence for himself by his
324 own statements to his own counsel; the other ground is sufficiently obvious.

By Mr. HILL: We won't insist upon it.

Cross-examination by Mr. PARKER:

Q. Was there any general talk there about Mr. Nichols being—his reputation being generally hurt in this matter?

A. I don't know but what there might have been between you and Mr. Marsh in my presence.

Q. Wasn't it talked generally?

A. I think likely.

EDWIN C. NICHOLS, complainant's witness, recalled, further testifies as follows, viz:

Direct examination by Mr. HILL:

Q. You heard the testimony of Mr. La Fever, Mr. Nichols?

A. Yes, sir.

Q. What have you to say in regard to the several interviews in November and following between you and him and to the conversation which he detailed?

A. I can repeat my testimony of yesterday, that we had several interviews, in which the matter of their pending patent and this device was talked about, and so far as my making any statement that tended toward bulldozing, as he puts it, or boasting of my ability or my desire or intention to break down or break up—break down

their patent or anything of that kind—I deny it in total. The conversations were not of that character. There was nothing that could induce any such conversations in that regard ever taking place.

Q. No patent was granted at that time?

325 A. No patent was granted. There was no controversy about the patent, because no patent had been granted.

Q. Did you ever oppose the patent in any way?

A. Not at all. I desired them to get a good, strong patent; one that manufacturers could respect and pay for. There was no controversy between us, so far as I can remember; no possible ground for any controversy at that time.

Q. You heard the testimony of Mr. Marsh with regard to the statement that you would not pay him anything for his device. Did you tell him that the day before he left with the engine for the fairs?

WITNESS: You refer to the statement that he claims that I made as to the interview about the 18th of September?

COUNSEL: Yes.

A. No such interview took place; at least no such conversation.

Q. But the understanding was that you were to pay no royalty, was it not?

A. As you have stated.

By Mr. PARKER: I object.

A. The understanding was that we were to have the use of the invention on all engines of our manufacture. That was the understanding and agreement.

Cross-examination by Mr. PARKER:

Q. When did you first determine to use it?

A. I determined to use the invention immediately after it was applied and was successful, provided it proved to be durable and substantial in the tests *as* we were about to make at the fairs and otherwise.

Q. You say no such interview with Mr. Marsh took place a day or two before he went to the fair?

326 A. I say no such conversation took place.

Q. No such conversation?

A. No, sir. I refer now to the conversation in which he alleges I said that we wouldn't pay him; that we proposed to use it without——

Q. Did you have an interview with him about that time?

A. No recollection of any particular interview. I was about the shops, I think, although I have almost a suspicion that I could prove I wasn't in the city at that time.

Q. You have a faint suspicion of that?

A. I have a faint suspicion. However, I am not sure; but the conversation Mr. Marsh alleges, in which he says that I told him that I wouldn't recognize his right or that I wouldn't pay, didn't want anything to do with the invention—I simply say that is not true.

By Mr. PARKER: I offer in evidence Exhibits Nos. "9, 11, 12, 13, 14, 15, 21, 22, 25" (copy to be substituted), and "26;" the agreement "21" to be substituted by a certified copy. I offer certified copies of proceedings and decisions in the interference case, Exhibit "27;" also printed copies of testimony in that case, Exhibit "28."

EUGENE M. CONVERSE, complainant's witness, recalled, further testifies as follows, viz:

Direct examination by Mr. HILL:

Q. Mr. Converse, please look at that notice, Exhibit No. "7," and state whether that is in your handwriting.

(Witness examined Exhibit No. "7.")

327 A. It is not.

Q. Do you know whose handwriting it is? Do you recognize it?

A. I think it is in Martin Metcalf's; I wouldn't be positive now.

Q. Mr. Marsh testified here this morning that he paid you seventy-five cents for drawing that notice. Have you anything to say in regard to that?

A. He didn't. I didn't draw the notice.

By the COURT: Did he pay you seventy-five cents for drawing any notice?

A. Not to my recollection.

Cross-examination by Mr. PARKER:

Q. Are you positive?

A. To the best of my recollection he didn't.

Q. You simply don't recollect it?

A. Yes, sir.

Q. You wouldn't swear positively he didn't pay you seventy-five cents for drawing a notice?

A. No.

Testimony closed.

By the COURT: I understand that this case is set for August 10th, at Charlotte, as early as you all can get there.

It is stipulated that the judge of the circuit court for the county of Calhoun may sign the foregoing testimony as and for a case made under the statute of the testimony taken in said cause in
328 open court, and that when so signed it may be filed as a part of the record in said cause.

Dated Dec. 26th, 1885.

R. A. PARKER,
So'r for Def'ts Marsh & La Fever.
CHARLES T. BURTON,
Sol'r for Compl'ts.

I hereby certify that the foregoing is a true and correct statement of the testimony and proceedings taken and had before me in open

court in the foregoing cause, as therein stated, pursuant to the above stipulation.

Dated this 28th day of December, 1885.

FRANK A. HOOKER,
Circuit Judge.

[Endorsed:] 5–162. Circuit court for Calhoun county. In chancery. Nichols, Shepard and Co. *vs.* Elon A. Marsh *et al.* Stipulation and settlement of case. Filed Dec. 30, 1885. Leonidas H. Brockway, register.

328*a* In the Circuit Court for the County of Calhoun. In Chancery.

NICHOLS, SHEPARD AND CO.
vs.
ELON A. MARSH, MINARD LA FEVER, and JAMES SCOTT.

Please take notice that the deposition *de bene esse* of James Scott, a witness who is so aged as to make it probable that he will not be able to attend the trial of the above cause and who resides in the county of Calhoun, in the State of Michigan, will be taken to be read in evidence at the hearing of said cause on the part of the plaintiff therein, before Joseph S. Noyes, one of the circuit court commissioners for the said county of Calhoun, at his office, No. 117 State street, in the city of Marshall, on Friday, the 13th day of June, 1884, at 10 o'clock of the forenoon of that day, at which time and place you are notified to be present and put such interrogatories as you think fit.

Dated June 6th, 1884.

CHARLES F. BURTON,
Attorney for Plaintiff.

To Messers. Brown & Thomas, solicitors for defendant Scott, & R. A. Parker, solicitor for defendants Marsh & La Fever.

STATE OF MICHIGAN,
County of Calhoun, } *ss:*

CHARLES F. BURTON, being duly sworn, deposes and says that he served notices of which the foregoing is a true copy *was served* on R. A. Parker, solicitor for defendants Marsh & La Fever, by delivering the same to him personally on the 6th day of June, 1884; that on the same day a similar notice was served on Messers. Brown and Thomas, solicitors for defendant Scott, by depositing such notice in the post office at Detroit, with postage prepaid, directed to Messers. Brown and Thomas, at Battle Creek, Michigan.

CHARLES F. BURTON.

Subscribed and sworn to before me this 13th day of June, 1884.

JOSEPH S. NOYES,
Notary Public.

328½ STATE OF MICHIGAN:

The Circuit Court for the County of Calhoun. In Chancery.

NICHOLS, SHEPARD & COMPANY, Complainants,
vs.
ELON A. MARSH, MINARD LA FEVER, & JAMES SCOTT, Defendants.

Deposition of James Scott, of the city of Battle Creek, in the county of Calhoun, a witness produced, sworn, and examined on the 13th day of June, in the year eighteen hundred and eighty-four, at the city of Marshall, in the said county, before me, a circuit court commissioner for said county, pursuant to the notice hereto annexed and for the reason therein stated, to be used in a certain cause now depending in the circuit court for the county of Calhoun—Nichols, Shepard and Co., complainant, and Elon A. Marsh, Minard La Fever, and James Scott, defendants—on the part of the said complainants.

Charles F. Burton appeared for the complainant; R. A. Parker appeared for the defendants Marsh & La Fever, and Brown and Thomas for James Scott.

The said JAMES SCOTT, being duly sworn and examined as a witness for and in behalf of the said complainant, deposes as follows:

Objected to by the counsel of James Marsh and La Fever that the notice and proceedings for the taking of the testimony are infirm, insufficient, and do not warrant the taking of the same; that the notice is insufficient and is not properly signed.

EXHIBIT "12."

Deposition of James Scott taken in behalf of complainant, at Marshall, before Joseph S. Noyes, pursuant to notice, June 13th, 1884.

1. Please state your name, age, residence, and occupation.

A. James Scott; I am seventy-four; I live in Battle Creek; I have no occupation.

2. Do you know Nichols, Shepard & Co., corporation, of Battle Creek?

Objected, and that it does not appear that the Nichols & Co. are a corporation.

A. I know some of the members of the firm.

3. Which ones of them do you know?

A. E. C. Nichols, John Nichols, David Shepard. I think that is all.

329–331 4. You are one of the defendants in the case, are you not?

A. Yes, sir.

5. Do you know Mr. Elon A. Marsh?

A. Yes, sir.

6. And do you know Mr. Minard La Fever?

A. Yes, sir.

7. State briefly and what, if any, business relations you have had with Mr. Marsh and La Fever during the last four years.

A. I bought of them, Marsh and La Fever, on the 5th day of March, 1881, what was supposed to be ⅓ interest in Marsh's steam valve gear.

8. How long from that time did you continue to be interested with them in the steam valve gear?

A. I think about the 25th day of September, 1883.

9. Did you, in consequence of your connection with them, have any litigation with Nichols, Shepard and Company?

A. We did.

10. What was the nature of the litigation?

Objected to on the ground that the records of the case are the best evidence.

A. We sued them in the year 1881 for royalty for the use of the steam valve gear. It was in the United States court at Detroit.

11. Do you know whether or not a final decree had been rendered in that cause on or before the 25th day of September, 1883?

Objected to as incompetent. Records in the case are the best evidence.

A. I know nothing except from hearsay. I saw no decree, to my recollection.

332 12. Had you been told that there was a decree; and, if so, by whom?

A. I had been told, but I don't recollect by whom.

13. Did you, on or about the 25th of September, 1883, meet Mr. Elon A. Marsh at the house of Mr. E. C. Nichols?

A. I met him on the evening of the 24th of September.

14. Will you state how you both came to be at Mr. Nichols' house?

Mr. SCOTT: Do you wish me to make a full statement?

Mr. BURTON: I want a statement of any conversation you may have had with Mr. Marsh or with Mr. La Fever or with both of them which induced you to call on Mr. Nichols.

Objected to as irrelevant and involving statement of facts which does not appear in testimony.

A. We met a day or two previous at my house. It was then talked up—something in regard to a compromise. Mr. Marsh was asked to go and see Mr. Nichols, and he rather objected. Mr. La Fever asked me to go.

Objected to and moved to strike out so much of the answer as has been given, as it is immaterial to the cause and is disclosing the business of other defendants and is thereby privileged.

Mr. SCOTT: I didn't object—I think not—and it was left in that way. I then went to Mr. Nichols on the evening of the 24th, and soon after I arrived there Mr. Marsh came in.

16. Will you state who were present at Mr. Nichols' house on the evening besides yourself, Mr. Marsh, and Mr. Nichols?

333 A. No other person.

Q. Will you state what took place at that meeting?

A. We soon commenced to talk about a compromise. Mr. Nichols wished Mr. Marsh to make a proposition. Mr. Marsh declined, and after talking he says that if a proposition was to be made he would leave it to his attorney in Detroit. Mr. Nichols says that he would like to see any business of mine that he could make a proposition without his attorney. I then told him I would make him a proposition that we would settle with him for ten thousand dollars. He said he wouldn't entertain that, and I told him I didn't suppose he would. After some further conversation we got up to leave. Mr. Nichols addressed himself to Mr. Marsh and says, Mr. Marsh, you know that you promised me that we could put on and use your valve gear for all our engines. Mr. Marsh says, Yes, but I did not put it in writing. Mr. Nichols says, But you would put it in writing if I had asked you. Mr. Marsh said, Yes, but you didn't ask me. I think that is pretty much all. I'm sure nothing else then until we got out of the house.

Moved to strike out all the foregoing answer on the ground that it does not bind Mr. La Fever. It does not appear that he was present or knew of it, and incompetent, irrelevant, and immaterial.

18. What, if anything, did you say to Mr. Marsh and what did he say to you immediately after leaving Mr. Nichols' house?

A. I told Mr. Marsh that I was surprised that he should go. I think I used the expression "going into an enemy's camp," and make such admissions if they were proved.

334 19. And what did he reply?

A. He thought that they didn't amount to anything. I think he said they didn't amount to anything.

20. Do you know of a proceeding called an interference suit between any of the parties to this suit?

A. I know that there was such a suit.

21. Do you know what the subject of it was?

A. It was, Mr. Marsh made a claim that Mr. Hoag, the assignor to Nichols, Shepard & Co.—the patent that they had taken, that Marsh claimed that it was his invention.

22. Was the device covered by that invention which was the subject of the interference used in connection with Marsh's valve gear?

A. I think it was.

23. Do you remember of ever having any conversation with Mr. La Fever in regard to the interference suit and its importance in connection with the use of Nichols, Shepard & Co. of the valve gear?

A. I don't remember.

24. Do you remember a conversation with La Fever in which he said that the invention which was the subject of the interference was not important, except that by preventing a protest for it you

could prevent Nichols, Shepard & Co. from using the Marsh valve gear, or words to that effect?

A. I don't recall it.

Moved to strike out all the testimony in reference to the interference matter as incompetent. Counsel for the complainants submits that it be stricken out.

335 Cross-examination by the defendants without waiving any of the objections heretofore made:

Cross-interrogatory 1. What note, Mr. Scott, did you receive to appear here to-day as witness?

Complainants' counsel objects as immaterial and irrelevant.

A. I received a notice by letter from Mr. Burton, counsel for Nichols, Shepard & Co.

2. Have you that notice here?

A. I think I have.

3. Will you produce it?

Witness produced letter marked Exhibit "A" and offered in evidence by defendants' counsel. Complainants' counsel objects to it as immaterial.

4. Were you paid anything to come and give your testimony?

A. No, sir.

5. What conversation, if any, have you had with any of the firm of Nichols, Shepard & Co. or any one representing them in regard to giving your testimony in this case?

Objected to as not proper cross-examination and immaterial.

A. I met Mr. E. C. Nichols and he wished me to come here. He thought it was important to get my testimony in case of death or sickness; that was pretty much all I remember; it is all.

6. When and where was that conversation?

A. At his office, at the works of Nichols, Shepard & Company; it was Wednesday—last of the week.

7. How came you to go there to his office?

A. Mr. C. E. Thomas told me that Mr. E. C. Nichols wished
336 to see me, and, if I could, to come up there—Charles Thomas, of the firm of Brown & Thomas, my solicitor in the case.

8. On that occasion did you tell Mr. Nichols what you could testify to?

A. I did not.

9. Did he know?

A. I declare I don't know.

10. Had you ever talked it over before with Mr. E. C. Nichols?

A. I don't remember; I presume I talked with him, but I can't tell when. I gave the same testimony once before.

11. When and where did you give this testimony before?

Objected to as immaterial, irrelevant, and not a proper cross-examination.

A. In Judge Hall's office; Mr. Parker was present. It was last winter—some time in December or January—it was the 14th of February.

12. In what case was that, Mr. Scott?

Objected to as immaterial and irrelevant and not a cross-examination.

A. A suit between me and Marsh and La Fever, the defendants herein.

13. That suit is still pending, is it not?

A. Yes, sir.

14. Do you know what court that is in?

A. The supreme court of Cook county, Illinois; it is in chancery.

15. Who is your solicitor in that case?

A. Brown & Thomas, of Battle Creek, and E. J. Hill & Son, of Chicago.

337 16. Paper shown witness and witness asked whether or not this is a copy of the original bill filed in this cause.

Objected to as irrelevant and not proper cross-examination.

A. Yes, sir; I think it is.

Paper marked for identification, marked Exhibit "B."

17. Do you remember whether or not you filed or had filed any amendment to that bill of complaint?

A. I think there was.

18. Paper shown witness and witness asked if he can say whether or not it is a copy of the amendment of the bill.

A. I should think it was.

Exhibit "C" marked for identification.

19. Did you make an affidavit, on or about the 20th of last November, in this case, in Chicago, between yourself and Marsh and La Fever, in which you stated what occurred at E. C. Nichols' house on the 24th of September?

A. I think I did.

20. In that affidavit did you not state the conversation differently from your testimony as given to-day?

A. I think I gave more fully of the conversation in my testimony to-day than I did in my affidavit then.

21. When was that affidavit made?

A. I think at Brown and Thomas' office.

22. Do you know where the affidavit is now?

A. I do not.

338 Counsel for defendants Marsh and La Fever requested Mr. Burton to produce the affidavits heretofore described. Counsel for complainants decline to do so.

Q. Do you know whether or not any extracts from this affidavit was published in the Battle Creek Moon on the 22nd day of December, 1883, and in the Battle Creek Journal on the 24th of December, 1883?

A. I don't remember the date of the papers, but I think such extracts were in them. (Newspapers entitled Battle Creek Daily Journal, Dec. 24th, 1883, were shown witness, and his attention called to one certain edition, a chapter of history, and witness asked if that article contains any extracts of the affidavits heretofore referred to.)

A. Yes, sir; it does. I don't remember of ever seeing that before.

24. Will you point out or read the portions of that article that are taken from that affidavit.)

Objected to as immaterial, as not proper cross-examination, and for the reason that the original affidavit is better evidence of its contents, and should be produced or its non-production answered for.

A. From the words "you knew Marsh" to the same, including the words "you did not ask me to."

Exhibit "D" marked for identification, as also article marked the same.

25. Have you ever authorized the complainants' solicitor to hold the said affidavit in his possession?

Objected to as immaterial and irrelevant.

A. I have very little recollection about that.

26. Can you say which is your recollection?

A. I don't remember anything about it. I don't remember giving them any permission to hold it.

27. Do you know how they came by it?

339 Objected to, as because it does not appear that either the complainants or their solicitor had it or ever have had it.

A. I do not.

Defendants' solicitor requests complainants' solicitor to state whether or not he has or not said affidavit in his possession at the moment.

Complainants' solicitor states that he cannot comply with the request or make any statement about the alleged affidavit.

29. Do you know, Mr. Scott, whether or not E. C. Nichols has said affidavit in his possession?

A. I do not. The affidavit was left with Brown and Thomas, my counsel, and I don't know anything more about it.

30. If the same has been delivered by said Brown & Thomas to E. C. Nichols or to the solicitor for complainants here, did you authorize or counsel such delivery?

A. I answered this in the former question, that I know nothing about it.

32. Can you state whether you gave them that express permission?

A. It is possible Mr. Brown might have asked, and I should have given it if he had. I don't remember anything about it.

33. Did you authorize or consent that any portion of that affidavit might be published in the newspapers, especially in the Battle Creek Daily Journal of December 24th, 1883?

A. I know nothing about it.

34. Then this publication marked Exhibit "D" was not authorized by you?

340 A. No, sir.

35. On the evening of the 24th of September, 1883, at what time did you arrive at Mr. Nichols' house?

Complainants' counsel, it appearing that the subject of the affidavit being exhaused, now moves to strike out all testimony relating thereto.

A. Seven or half past seven, I should think.

36. At what time did Mr. Marsh get there?

A. I should think about ten minutes after I got there.

37. Did you know Mr. Marsh was coming?

A. I did not.

38. What did you go there for?

A. I went to see Mr. E. C. Nichols in regard to a compromise of this suit for royalty with Nichols, Shepard & Company on Marsh's steam valve gear—the invention that is involved in this suit.

39. When you went there had you been authorized by the other defendants to make a proposition?

Objected to as immaterial and irrelevant.

A. That is what we understood at the last time we met—was for a settlement.

39. Did Marsh or La Fever authorize or assent that you should make Nichols a definite proposition of settlement, specifying the terms?

Same objection.

A. They did not.

40. I understood you to say that you told Mr. Nichols on this occasion that you would settle for $10,000; that Marsh, La Fever & Co. would settle with Nichols, Shepard & Co. for ten thousand dollars; now, why did you make that proposition if it had not been agreed upon?

341 Same objection.

A. I made that on my own responsibility, thinking Marsh and La Fever would be satisfied with it.

41. Did you expect the proposition to be entertained?

A. I did not; no, sir.

42. Why?

A. I didn't think he would be willing to pay that amount when I made it.

43. In your answer to question 17 on the direct, after this statement of making the proposition of settlement you mentioned some further conversation. What was that conversation?

A. It was in reference to a compromise, but I can't state it. It was between us all.

44. Have you any recollection what was said?

A. No, sir.

45. Did you recollect, Mr. Scott, a talk about bills pending in Congress in regard to the patent?

A. I do not.

46. And about the interference case?

A. There might have been talk about those matters, but I can't get it into shape so I can state what it was.

47. They were all involved in this settlement, were they not, if a settlement had been made?

A. I suppose that was the understanding.

48. Do you not recollect in that conversation that Mr. Nichols stated that when you got down to Congress in regard to the bills you would find him there to meet you?

A. I don't remember it; I don't say that he did not say so.

342 49. Do you recollect his saying that he would bet the defendants $10,000 to a 1,000 that Nichols and Shepard & Co. would win in the interference case in the Patent Office?

A. There was something said there about betting, but I can't recollect just what it was; I don't remember whether it was in reference to the interference case or not. It didn't make much of an impression on me; it didn't amount to anything.

50. How long were you there?

A. Half or three-quarters of an hour.

51. Was Mr. Nichols expecting to see you that evening—that is, was any arrangements made to meet him?

A. No, sir.

52. You found him at home?

A. I met him and Mr. Stewart at the gate; they were going downtown.

53. Did you tell him you wanted to see him?

A. Yes, sir.

54. Did he go back in the house with you?

A. Yes, sir.

56. Did you tell him what you came to see him for?

A. I don't remember.

57. What did you talk about?

A. It is all blank to me. I couldn't tell. He was called on once, and I think the time was occupied until Mr. Marsh came without much being said.

58. Was he occupied when Marsh came, or had you commenced talking about the proposed settlement?

A. I think we had commenced talking something about it; I don't remember what it was.

343 59. When did you first hear him make a claim that Marsh had given him permission to use the valve gear?

A. It was there at that time.

60. Have you stated all the conversation you can recollect that occurred on that occasion?

A. I have.

61. Have you stated the exact language of Mr. Nichols and Mr. Marsh in that conversation?

A. As near as I can recollect, I have.

62. In your answer to question 17, with direct, you say that Mr. Nichols said, "Mr. Marsh, you know you have promised me that we could put on and use your valve gear for our engines." Now, do you swear positively that that was Mr. Nichols' exact language?

A. No, sir, I wouldn't; but the effect was the same.

63. In the case between yourself and the other defendants your testimony was taken before Mr. Hall last February. On that occasion did you not swear in answer to direct question 17 that you saw Mr. Marsh in the evening of 24th of September, 1883, at E. C. Nichols' residence? I quote from your answer: "Mr. Marsh and Mr. Nichols continued a conversation in regard to this patent and during the conversation Mr. Nichols says to Mr. Marsh, 'You know that you agreed to give me a right to put your device onto all engines that Nichols, Shepard & Co. wished to put it on.'" Did you so testify?

A. I presume so; I don't know. The effect is the same as what I say here.

344 64. Which do you say is correct, the testimony you give here to-day or the testimony you gave then?

Objected to, as, inasmuch as it does not appear that the statement alleged to have been made in the former testimony is quoted from that testimony, that if it is offered for the purpose of contradicting the witness the testimony itself should be produced.

A. I meant to convey the same meaning to-day that I did the other time; if I didn't do so it is wrong.

65. Now, which was it that Mr. Nichols said, Mr. Marsh? You know that you promised me (quoting from your answer to question 17th, this testimony) that we could put on and use your valve gear for all our engines, or that you know that you agreed to give me a right to put your device onto all engines that Nichols, Shepard & Co. wished to put it onto.

A. I think the first was right; I think they both convey the same meaning.

66. Now, what did he say in talking to Marsh—that you agreed to give me a right, or that you promised me that we could put it on, &c. Now, which was right?

A. I think the first statement in the question is the correct language used on that occasion.

67. What was the language that Mr. Nichols used in talking to Mr. Marsh, that they could put the device on "all engines that Nichols, Shepard & Co. wished to put it on," or was the language that Mr. Nichols used that we could use your valve gear "for all our engines?"

A. I think "Nichols, Shepard & Co." wasn't used. He was talking for them and said all our engines.

345 68. Now, Mr. Scott, do you know or can you give the exact language of Mr. Nichols on that occasion?

A. I don't know as I can, but I give the meaning as I understand it.

Moved to strike out all the testimony in reference to the conversation between Nichols and Marsh, as it appears to be on his understanding and not the language of the witness.

69. How long was this before you left?

A. Just before.

70. Do you recollect Mr. Nichols stating to you in that conversation that Marsh had given them a shop right, or words to that effect?

A. I think that he has told me so, but not at that time.

Q. Do you remember turning to Marsh and asking if that was so and Marsh denying it?

A. Mr. Marsh always did deny it.

72. Don't you recollect that Marsh said in Nichols' presence that it was a damn lie?

A. I have no recollection of it. I would not like to say positively that he did or didn't. There was a good deal of running conversation there.

73. Did you speak to Marsh about it afterwards?

A. Yes, sir.

74. And did he not then deny ever giving the complainant shop rights?

Objected to as immaterial.

A. No, sir.

75. What did he say?

A. I told him I was surprised at what he had said, and he said he didn't think it amounted to anything.

346 76. Was that all that was said by him there?

A. I can't recall anything further. We were talking as we were going down toward the post office.

77. Did you see Mr. Nichols after that; and, if so, when and where?

A. Yes, sir; I saw him the next day at Mr. Nichols' office—in the forenoon of that day.

78. Did you talk with him about this matter—that is, about what Marsh had said?

A. I did.

79. Will you state the conversation?

A. We talked over the admissions of Mr. Marsh the night before. I don't remember just what was said. We agreed on what he said at that time.

80. Who spoke of it first?

A. I can't tell.

81. What claim did Mr. Nichols make as to his having a shop right at that time?

A. I don't recollect of any.

82. Since that time has he ever made a claim that the complainant had a shop right?

A. I think he has, and that he could show it by other witnesses.

83. When and where did he make that claim?

A. I can't tell; it was some time after the 24th of September, and, I think, at his office.

84. Did he mention the witnesses?

A. He did not tell me the witnesses.

85. How came you to go to see him the next day after the evening of the 24th day of September?

A. Because I was not satisfied with the interview we had the night before; because we didn't arrive to anything that we went there for—I mean a settlement.

347 86. Then the statement of Marsh had nothing to do with it, your going up to see him?

A. Perhaps it had.

87. What did it have to do with it?

A. Because Mr. Marsh's admission the night before was something I had never known before. Then I saw the United States Official Gazette, with Judge Brown's decision, and that afternoon Mr. Brown and I went to Chicago. I then filed the bill marked Exhibit "B" the next day after getting there.

90. Now, in regard to Marsh's so-called admission as to a license and shop right, did you learn anything more about the matter when you saw Nichols the next day? You say you went to see about it.

A. I did not further than he claimed that Marsh had admitted some facts.

91. Was that the first time you ever heard Nichols make the claim?

A. I don't recollect of his making that claim, but I heard it on the street before that time.

92. And Mr. Marsh had always denied that it was true?

A. Yes, sir.

93. Do you recollect when the suit against the complainant by the defendants was commenced in United States court at Detroit, Mich.; and, if so, about when was it?

A. I think it was in May or June, 1881.

94. Was that the same suit that was mentioned in the pleadings in this case?

A. Yes, sir.

95. You obtained your interest in the patent in March, 1881?

348 A. Yes, sir.

Q. Now, from the time you obtained your interest in the patents up to the time you commenced that suit did you not have more or less negotiations with Nichols, Shepard & Co. in regard to the use of the invention?

A. I have no recollection of any more in that direction but twice, and at those times we sent Mr. Converse to Mr. Nichols to try to make some arrangements with them, and he reported the second time that it was useless to try. I insisted that we should make every effort to arrange the matter with them before commencing the suit.

97. Do you know what their claim was at that time in regard to the patent?

A. I don't now recall it.

98. Did they not claim that Marsh had stolen the invention and that his patent was not good for anything?

A. I think they did make a claim that his patent wasn't good.

99. Did they not claim that they would use the device regardless of any patent?

A. That was what was said; that was what I heard on the street or among ourselves while we were talking about it.

100. Didn't Mr. Converse report that Nichols claimed that Marsh had no claim on the device; that he had stolen the whole thing, and that they would not pay a damn cent for it?

Objected to that a report of Mr. Converse is not evidence of what Mr. Nichols may have said.

349 A. I don't think I saw Mr. Converse. I got my news from Mr. Marsh or Mr. La Fever, or both.

101. How many times did Mr. Converse see Mr. Nichols, as far as you know?

A. Twice is all I know of.

102. During that time did you see Mr. Nichols yourself?

A. I don't remember that I did.

103. While you were negotiating for an interest in the patent did you see any of the persons of the complainant's firm about it?

A. I don't recollect that I did. I had rather not say positively.

104. After the suit was begun were you present at any interview between the defendants in this case and E. C. Nichols in regard to the patent?

A. Yes, sir.

105. When and where?

A. At Mr. Converse's office. We met them by appointment. I can't tell the exact time; it was about the time the first testimony in that case was taken before Converse.

106. What claim was there made by Mr. Nichols at that time in reference to their use of the device in question?

A. I don't remember what claim he did make; he claimed as a compromise that he would turn the Hoag patent over to us and assist us with others, but would pay no money. The interview was on the 6th day of April, 1882.

107. What claim, if any, did he make with reference to the validity of Marsh's patent?

A. I don't remember.

350 108. Did he not claim that the complainant here would use the device anyhow, regardless of Marsh's patent?

A. I have no recollection of what he did say about it at that time. I know it was generally understood there among us all that he would use the invention.

109. Is that the only interview you had together?

A. I think it was.

110. Do you know by whose appointment that interview was held, by Marsh, La Fever and Co. or Nichols?

A. I think it was by Mr. Converse trying to bring about a settlement; I think he gave us notice. I think he, Mr. Converse, had

been doing something for us, but I don't understand that it was at our request that he made the appointment.

111. Do you know whether Mr. Nichols made a statement at that time as to their, defendants', positions at that time?

A. I do not.

112. Did he not in substance say that he wanted to know if we (Marsh, La Fever & Co.) intended to continue on in the suit and lose our patent or withdraw the suit, give him a free right to use it, and, with his assistance, compel others to pay for its use?

A. I don't remember that he did. I don't remember; he might have said so.

113. And did he not further say this, that if Nichols, Shepard & Co. got the dead wood on Marsh and if you were wise you would take his view of the case and settle (in substance)?

A. I couldn't say that he said this, but the general understanding was that he would break the patent down and use it anyway.

351 114. In that interview did he not refuse to pay anything to settle, and assert that original patent was not properly signed?

A. I think he did.

115. On or about the 14th day of June, 1881, do you recollect giving to the defendants Marsh & La Fever a power of attorney to settle with Nichols, Shepard & Co.?

Objected to as immaterial.

A. No recollection.

116. In your testimony in the case between yourself and Marsh & La Fever before Judge Hall did you not testify that you did?

Objected to because they were attempting to contradict by testimony not drawn out in the direct examination.

Mr. PARKER: I simply state it to call his recollection to the matter and refresh his recollection.

A. It is possible that I did; I did give it.

117. In this case pending between you and Marsh & La Fever did you give Mr. Brown, of Brown & Thomas, any authority to settle that case in connection with the settlement with Nichols, Shepard & Co.?

Objected to as immaterial.

A. I don't think I did.

118. Did you give him any authority to make this proposition: 1st, it is proposed that if Nichols, Shepard & Co. can be brought to consent to submit to any decree drawn by attorneys of Marsh and La Fever which in their opinion will most satisfactorily establish the original patent; and, 2nd, will convey this patent granted

352 to one Jack Hoag, their foreman, and now assigned to them for an improvement in said first patent, reserving a shop or factory license in the combined patents, will La Fever, reconveying the State-street property in Chicago to Scott, Scott reconsigning the

patent in the United States and elsewhere, and pay Scott in reasonable annual payments out of the sale of licenses of the patent in the future, Scott repaying the balances, if any, in the proceeds over and above outlay—that is to say, place Scott *in statu quo?*

A. It is the first time I ever heard of that proposition. I did not authorize any such proposition. Mr. Brown was always ready for me to consider any proposition, and that no proposition was to be closed without submitting it to me.

119 (calling witness's attention to Exhibit "D," sent soon after this publication.) Did you see it?

A. I have no recollection of it now. I might have seen it, but I couldn't tell when.

120. Do you know if Mr. Converse made a written statement to you of his interviews with E. C. Nichols or not?

A. I do not.

121. Do you recollect Nichols claiming that he had obtained an opinion from Washington that Marsh's patent wasn't good for anything, as it had been anticipated, and that he had paid a $100.00 for the opinion?

A. I have heard such a story, but didn't hear Mr. Nichols say so.

Paper marked "Scott Exhibit 8, T. W. H."

By Mr. BURTON:

122. Is there a letter addressed to Mr. Parker—was it written to him while he was employed as your counsel?

A. Yes, sir.

Objected to its admission as evidence, or it is a privileged communication.

123. Are the statements made in this letter true?

A. The statements are hearsay, from what I heard from somebody else; I can't swear that they are true.

Exhibit "E" marked for identification.

Witness states that my testimony here of the conversation had at Mr. Nichols' house September 24th, 1883, is in substance the same as testimony given at previous occasions.

Redirect examination by Mr. BURTON:

Q. Do you mean by that statement that you intend to give accurately the substance of the conversation you had then, though you may not remember accurately the words that were used?

A. That is it.

Objected to as leading and irrelevant.

JAMES SCOTT.

Subscribed and sworn to before me on this the 13th day of June A. D. 1884.

JOSEPH S. NOYES,
Circuit Court Commissioner, Calhoun County, Mich.

353 STATE OF MICHIGAN:

The Circuit Court for the County of Calhoun. In Chancery.

NICHOLS, SHEPARD & Co., Compl'ts,
vs.
ELON A. MARSH, MINARD LA FEVER, and JAMES SCOTT, Defendants.

To the circuit court for the county of Calhoun, in chancery:

I, Joseph S. Noyes, circuit court commissioner for the county of Calhoun, do hereby certify and report that the foregoing deposition of James Scott was taken before me, at my office, in the city of Marshall, county and State aforesaid, on the 13th day of June, A. D. 1884, on the part and at the request of the above-named complainant; that the said deposition was taken pursuant to the notice a copy of which, with an affidavit of the service thereof, is hereto annexed, and that the said deposition was taken for the reason that the said James Scott was — aged as to make it probable that he would not be able to attend to the trial of the above cause, as appears by the motion of the said complainant, hereto annexed, and that the manner of taking the said deposition was as follows, to wit: The said witness was first duly sworn by me to testify the truth, the whole truth, and nothing but the truth relating to the said cause. He was then examined by the attorney for the said complainant upon verbal interrogatories propounded to him by the attorney for the said complainant; and the said interrogatories, with his several answers thereto, were carefully written out by me, after which the attorney for the said defendants, Marsh and La Fever, cross-examined the said witness in like manner, and his cross-examination was also carefully written out by me; after which the said deposition was correctly read over to the said witness and, being approved by the said witness, was then and there subscribed by him.

Dated Marshall, June 13th, 1884.

JOSEPH S. NOYES,
Circuit Court Commissioner for Calhoun County, Mich.

354 [Endorsed:] State of Michigan. The circuit court for the county of Calhoun. In chancery. Nichols, Shepard & Co., compl't, *vs.* Elon A. Marsh, Minard Lafever, and James Scott, def'ts. Deposition of James Scott. Filed August 9th. Wm. F. Neale, register in chancery. C. T. Burton, compl't's sol'r. R. A. Parker, def'ts', Marsh & Lafever, sol'r. Exhibit 12. June 23, 1885. G. Gatrell, official stenographer, Marshall, Mich.

355 (*Copy of Letter Put in as Exhibit with Scott's Deposition.*)

Charles F. Burton, Buhl block, 90 Griswold St.

DETROIT, *January* 6, 1884.

James Scott, Esq., Battle Creek, Mich.

355*a* DEAR SIR: I am informed by Mr. Nichols that you will attend at Marshall, before Mr. Noyes, 117 Main St.; have noti-

fied the attorneys representing Messrs. Marsh & Lafever and yourself that I will attend and make such examination on Friday, the 13th of June, one week from to-day, at 10 o'clock in the forenoon.

I hope to meet you there at that time. I would like to have a short consultation with you before the examination begins if you will have some place where we can meet, either at Battle Creek or Marshall.

An hour's conversation will be sufficient. Let me hear from you about this.

I remain yours, &c., C. F. BURTON.

EXHIBIT 13. Jun- 23, 1885. G. Gatrell, Official Stenographer, Marshall, Mich.

A Chapter of History.

From the Battle Creek Moon, 22nd inst.

About three years ago Mr. Elon A. Marsh, of this city, made a reversing valve gear for steam-engines, for which he applied for a patent. Soon afterwards he urged Nichols, Shepard & Co. to apply and test his valve gear upon one of their traction engines. After considerable persuasion Mr. Nichols consented, and an engine was prepared and the new valve gear fitted upon it, the work and expense of so doing being paid by N., S. & Co.

After several days' trial the valve gear was made to work satisfactorily, and the engine was then sent for exhibition to the Illinois and Missouri State fairs. Mr. Marsh, at his urgent request, accompanied the engine to exhibit his valve gear, and N., S. & Co. paid his traveling expenses, hotel bills, and regular wages.

Shortly after this Mr. Marsh obtained a patent, and he then
356 insisted that if N., S. & Co. wanted to make and use the valve gear on their engines they should pay the full royalty or license fee charged other makers. Mr. Nichols demurred, claiming that N., S. & Co. had contributed largely to the success of the device in work, time, and money, and that it was the understanding and agreement with Mr. Marsh, as a consideration for so doing, that they (N., S. & Co.) were to have the free use of the valve gear on their engines.

Marsh repudiated and refused to recognize any such agreement and brought suit in the United States court for infringement, and the court decided the patent invalid.

Meantime Mr. James Scott, of this city, had purchased a one-third interest in the patent, and he has lately brought suit against Marsh & La Fever to recover back the property paid them for it. He makes a sworn statement under date of Nov. 20, 1883, from which we make the following extract:

James Scott, being duly sworn, says "that said Elon A. Marsh, on or about the twenty-fifth day of September, '83, in conversation with Edwin C. Nichols, in the presence and hearing of this affiant, admitted that before his patent was granted he had given Nichols, Shepard & Co. verbal permission to use and sell his valve gear on

all engines of their manufacture in consideration of assistance rendered him by them in testing and introducing the same. * * *

"'You know, Marsh,' said Mr. Nichols, 'you did agree that we should have the privilege of making and selling the valve gear on all our engines,' or words to that effect, to which Marsh replied, 'Yes; but I did not put it in writing.'

357 "'But you would have put it in writing if I had asked you to,' said Mr. Nichols. 'Yes; I probably would,' said Marsh, 'but you did not ask me to.'"

It seems apparent from the foregoing admitted facts and the sworn statement of Mr. Scott that Nichols, Shepard & Co. are entirely justified in resisting the demands of Marsh & Co. for royalty on the valve gears used on their engines.

The Moon has hitherto been inclined to favor the other side in the controversy and has published several articles from Marsh & La Fever reflecting upon N., S. & Co. in this matter. It is evident we were not rightly informed as to the facts and were misled by parties in interest. In the light of this fuller knowledge we are glad to make this *amende honorable.*

The acknowledged high character of the members of this firm and their reputation at home and abroad for fair and generous dealings in all matters of business is such that the public have been loth to believe the charges of "piracy," etc., brought against them, and will be glad to learn that in this as in other affairs there "are always two sides to a story."

357*a* In the Circuit Court for the County of Calhoun. In Chancery.

NICHOLS, SHEPARD & CO.
vs.
ELON A. MARSH, MINARD LE FEVER, and JAMES SCOTT.

SIRS: Please take notice, on Tuesday, the 19th day of May, 1885, at ten o'clock in the forenoon, at the office and before John C. Whitridge, notary public, over the Second National Bank, in Richmond, Ind., I shall examine as witnesses on the part of the complainants in this cause Horatio N. Land, Howard Campbell, and William G. Scott. You are invited to attend and cross-examine said witnesses. The testimony of said witnesses will be taken under the provisions of the statute relative to depositions of witnesses out of the State of Michigan.

Dated Detroit, May 5th, 1885.

CHARLES F. BURTON,
Sol'r for Compl't.

To Messrs. Brown & Thomas, sol'rs for def't Scott.

STATE OF MICHIGAN, *County of Wayne,* } *ss:*

CHARLES F. BURTON, being duly sworn, deposes and says that he served a notice of which the foregoing is a true copy upon R. A. Parker, solicitor for Marsh and Le Fever, upon the 5th day of May,

1885, by delivering the same to him personally; that he served a like notice upon Messrs. Brown and Thomas, solicitors for defendant Scott, by depositing the same, properly directed and with postage fully prepaid, in the post office at Detroit.

CHARLES F. BURTON.

Subscribed and sworn to before me this 6th day of May, 1885.

GEORGE MAITLAND,
Notary Public, Wayne Co., Mich.

STATE OF INDIANA, } ss:
Wayne County, }

To any constable of Wayne township:

You are hereby commanded to summon William G. Scott to appear before me, at my office, at northwest corner 8 & Main streets, in Richmond, Ind., at ten o'clock in the forenoon, on the 19 day of May, 1885, to testify on the part of the complainants in the case of Nichols, Shepard & Co. *vs.* Elon A. Marsh, Minard Le Fever, and James Scott, & bring with you the papers specified herein, to wit (see back hereof for list), and have you then and there this writ.

Witness my hand and seal this 19 day of May, 1885.

JOHN C. WHITRIDGE,
Notary Public.

Endorsed: List of papers to be produced: License from Marsh & Le Fever for reverse engine valve gear, and all letters received from Elon A. Marsh, Marsh & Le Fever, Marsh, Le Fever & Co. from Jan. 1, 1879, to May 18, 1885, by Garr, Scott & Co., and copies of all letters writen by Garr, Scott & Co. to Elon A. Marsh, Marsh & Le Fever, & Marsh, Le Fever & Co.

May 19th, 1885.—I received this writ at 10 a. m. I served the same on William G. Scott by reading the same to him and — his presence and hearing.

May 19th, 1885.

C. T. SEAMAN, *Constable.*

Constable's fees, 50 cts.

Depositions of Horatio N. Land and William G. Scott, for Complainant.

Witnesses produced and sworn to before me, John C. Whitridge, a notary public in and for Wayne county and State of Indiana, at my law office, at the northwest corner of 8th and Main streets, in the city of Richmond, in said county, pursuant to the enclosed notice.

These depositions are taken on the part of the complain-
358 ants in a certain action now pending in the circuit court for the county of Calhoun, in the State of Michigan, wherein Nichols, Shepard & Co. are complainants and Elon A. Marsh, Minard La Fever, and James Scott are defendants.

Edward J. Hill, solicitor for complainants, and R. A. Parker, solicitor for defendants Marsh and La Fever, appeared at the taking of said depositions.

The said HORATIO N. LAND, being duly sworn to testify the truth, the whole truth, and nothing but the truth relating to said cause, deposes as follows:

R. A. Parker now comes and objects to the taking of said depositions, and assigns as a reason therefor that the said notice to take the same is uncertain and insufficient in this, that it does not specify the statute or any authority providing for the taking of depositions; also that there is no authority, and that it does not come within the provisions of any statute.

Q. 1. State your name, age, residence, and occupation.

A My name is Horatio N. Land; my age is 53 years; I reside in Richmond, in the State of Indiana; I am connected with Gaar, Scott & Co., of this city, and am general superintendent of said company's works, and have been such general superintendent since 1874. The business of such company is building separators, portable engines, traction engines, portable saw-mills, &c.

Q. 2. Are you acquainted with the partners to said action, complainants and defendants, or either of them; and, if so, whom?

A. I am not acquainted with complainants except by business reputation; have so known them for twenty years. They
359 have been engaged in the same general business as Gaar, Scott & Co. during same period. I am acquainted with Elon A. Marsh, of the defendants herein; I made his acquaintance in 1881, when he came to our works. He came there with his patent reverse gear for traction engines; we looked it over and thought it a pretty good thing; he stayed there with us while we put one on. We did not then contract with him for one, but think it was several weeks afterwards, and the second time he came I think we contracted with him for a shop right.

Q. 3. What representations, if any, prior to the taking of this shop right by Gaar, Scott & Co., did Mr. Marsh make as to where and by whom the device had been tested and used, and what assurance did he give you, if any, that such device would accomplish the desired result?

A. If I remember right, he represented that Nichols, Shepard & Co. and Russell & Co. had used it.

He stayed there and demonstrated that it would accomplish the result claimed by pntting one on an engine which we afterwards sold, and it is running yet; that is all I know about it.

Cross-examined by R. A. PARKER:

Q. 4. Did Marsh say anything further about the use of the device by Nichols, Shepard & Co. than to state the fact that they had used it?

A. I do not recollect that he said anything more than that.

HORATIO N. LAND.

360 The said WILLIAM G. SCOTT, being sworn to testify the truth, the whole truth, and nothing but the truth relating to said cause, deposes as follows:

Q. 1. State your name, age, residence, and occupation.

A. My name is William G. Scott; my age is 60 years; my residence is in Richmond, Indiana; I am connected with the corporation of Gaar, Scott & Co., of Richmond, Indiana, and am secretary of said company. I have been connected with said company for 15 years. Gaar, Scott & Co. are engaged in manufacturing threshers, engines, portable saw-mills, traction engines, &c.

Q. 2. Are you acquainted with the parties to said action, complainants and defendants, or either of them? If so, whom?

A. I know complainants by reputation, but never met either of them. I know Mr. Marsh at our works at Richmond, Indiana.

Q. 3. On or about Jan'y 5th, 1881, Gaar, Scott & Co. and Marsh, & La Fever, two of the defendants herein, entered into an agreement of writing, by which said Marsh & La Fever granted to Gaar, Scott & Co. a license for the invention, purporting to be secured by letters patent No. 236,052, dated December 28th, 1880, on certain improvements in steam-engine valve gear. With whom, on the part of Gaar, Scott & Co., were the negotiations had which led up to the making of this license?

A. They were made with myself and Mr. Horatio N. Land, of our works.

Q. 4. When and where did you form the acquaintance of Mr. Marsh?

361 A. At the works of Gaar, Scott & Co., in Richmond, Ind., on or about the date of said license.

Q. 5. He was at your place several days at that time, was he not?

A. He was, and several times; I mean prior to the date of the license.

Q. 6. What representations, if any, prior to the taking of this shop license or right by Gaar, Scott & Co., did Mr. Marsh make as to where and by whom the device had been tested and used, and what assurance did he give you, if any, that such device would accomplish the desired result?

A. I have no recollection of his making to me any representation in the matter, but I depended on the actual test of the device, which he was to and did put it on one of our engines, and the judgment of its merits, as given by our superintendent and draughtsman. I also understood at the time that Nichols and Shepard & Co. were using it and that the Eagle Machine Works of Indianapolis had decided to put it on their engines also; but I cannot remember whether this information came directly from Mr. Marsh to me or not.

Q. 7. You have the license mentioned with you?

A. I have. It was issued in duplicate. One copy Gaar, Scott & Co. retained, and the other by Marsh and La Fever. It is dated January 5, 1881.

Q. 8. What letters, if any, did you receive from Mr. Marsh prior to this date—January 5, 1881?

A. I received one letter, dated Feb'y 8th, 1879, from Battle Creek, Michigan, signed E. A. Marsh; also one from the same place, dated November 29, 1880, signed by E. A. Marsh; also one from
362 Indianapolis, Ind., dated Dec. 28, 1880, signed by E. A. Marsh. I have these letters with me now. I annex them to my deposition as Exhibits Scott "A," Scott "B," and Scott "C," and they are so marked.

Q. 9. You have other letters received from Mr. Marsh of concerns with which he was connected relative to this invention, have you not?

A. I have. I have four letters and one postal card dated as follows: One dated Battle Creek, Mich., May 21, 1881, signed Marsh, La Fever & Co., marked Scott Exhibit "D," and attached hereto; one dated same, July 27, 1881, signed Marsh, La Fever & Co., marked Scott "E," and attached hereto; one dated January 20, 1881, signed Marsh, La Fever & Co., marked Scott "F," and attached; one dated March 19, 1884, signed Marsh, La Fever & Co., and marked Scott "G," and attached hereto; also a postal card dated March 1, 1882, signed Marsh, La Fever & Co., marked Scott "H," and attached hereto.

WILLIAM G. SCOTT.

EXHIBIT SCOTT "A."

BATTLE CREEK, MICH., *Feb. 8th*, 1879.

Messrs. Gaar & Scott.

DEAR SIRS: I have lately invented a new device for reversing the valve on steam-engines, to substitute the link, which is very simple and practical in the fullest sense. It does not require the use of an eccentric, is positive in action, and may be reversed from the driver's seat while the engine is in full motion. I think its low cost will make it valuable to manufacturers of traction engines, and its simplicity make it popular. I am about to place this invention
363 upon the market, and having learned from my experience in the field the popularity of your engine I thought to write to you before making it public.

Res'p.,

E. A. MARSH.

EXHIBIT SCOTT "B."

NOV. 29TH, 1880.

Messrs. Garr, Scott & Co.

DEAR SIRS: I have secured a patent on the device for reversing the motion of steam-engines, which I wrote you about last spring. It has been thoroughly tested and gives operator better control of the engine than can be had with the link motion or any other device. I would be pleased to put it on one of your engines and let you see its merits.

Very truly yours,

E. A. MARSH,
Per MARSH & LA FEVER,
Battle Creek, Mich.

EXHIBIT SCOTT "C."

INDIANAPOLIS, *Dec. 28th*, 1880.

Messrs. Garr, Scott & Co.

DEAR SIRS: Am sorry to say that I cannot be at your place before next Saturday. I have just returned from Battle Creek and find that I cannot get papers ready until latter part of this week.

Very truly yours, E. A. MARSH.

EXHIBIT SCOTT "D."

BATTLE CREEK, MICH., *May 21st*, 1881.

Mess. Garr, Scott & Co.

DEAR SIRS: Yours of 20th at hand. Regarding the small pamphlets you mention we have some on hand, but do not think
364 they are suitable for distribution among your customers, as they were merely designed for manufacturers. We do not think they would benefit parties not conversant with steam-engines. We send you electrotype per mail to-day.

Very truly yours, MARSH, LA FEVER & CO.

EXHIBIT SCOTT "E."

BATTLE CREEK, MICH., *July 27th*, 1881.

Messrs. Garr, Scott & Co.

DEAR SIRS: In making returns for royalty for Marsh's steam-engine valve gear please direct to the First National Bank of Battle Creek and payable to Marsh, La Fever & Co. or order, and much oblige,

Yours, &c., MARSH, LA FEVER & Co.

EXHIBIT SCOTT "F."

BATTLE CREEK, MICH., *Jan. 20th*, 1881.

Mess. Garr, Scott & Co., Richmond, Ind.

DEAR SIRS: We send you to-day per mail an electrotype of the cut shown on this letter-head, which we presume is the one you want. If, however, there is any other cut shown in our pamphlet that you desire let us know and we will send it at once.

Yours very truly, MARSH, LA FEVER & CO.

365 EXHIBIT SCOTT "G."

BATTLE CREEK, MICH., *March 9th*, 1884.

Garr, Scott & Co., Richmond, Indiana.

GENTLEMEN: Knowing that you in common with other builders have watched with more or less interest the progress of our litigation with Nichols, Shepard & Co., we inform you that the Patent

Office officials have decided that Marsh was the inventor of the improvement in steam-engine valve gears covered by a patent issued to one A. G. Hoag and assigned by him to N., S. & Co.

This case has been in the Patent Office more than two and a half years and was decided on March the second, '84, in favor of Marsh. We have been told by several of the large builders of traction engines that they had been notified by N., S. & Co. to not use our reversing device, holding over their heads the Hoag patent. This, a most desperate attempt by N., S. & Co. to hold what they had fraudulently obtained at the outset, is the blackest case that ever disgraced the patent system. The decision covers 9 sheets of type copy. Mr. Marsh is now applying his device to the Canton Monitor by solicitation of Mr. I. Miller. He is also on his way to Ofrick & Co.'s to apply his device to their engine. Our device would have been used ere this by them, but the old gentleman was afraid of N., S. & Co.'s threat. The fact that Russell & Co. have used our device on all their traction engines for the past three seasons without the least regard to the threats of N., S. & Co. is conclusive that the pirates had no case; and that threats made by them were nothing but bun-
366 come. Nothing has occurred here of late that has given such general satisfaction as the announcement of this decision. N., S. & Co. have applied our device to about 800 engines. They have in the meantime tried ten different reversing devices, the link included. They had two objects in view in this, namely, to find a substitute for ours or to scare us into a compromise. Neither were successful. Three years of constant application and use of our device has proven that it is the cheapest and most effective device in use for that purpose.

Respectfully, MARSH, LA FEVER & CO.

EXHIBIT SCOTT "H."

BATTLE CREEK, MICH., 7, 20, '82.

DEAR SIR: Will you please make ret. for use of Marsh's pat. reverse steam-valve gear, as per your license Jan'y 5, '81. We should be pleased to hear from you.

Respectfully, MARSH, LA FEVER & CO.

[Written across the face in pencil:] One ordered at St. Louis; none sold.

366*a* STATE OF INDIANA, } *sct:*
Wayne County, }

I, John C. Whitridge, a notary public in and for said county of Wayne, do hereby certify that the witness- whose depositions are hereunto attached, Horatio N. Land and William G. Scott, were severally by me first duly sworn according to the law to testify to the truth, the whole truth, and nothing but the truth relating to the matters in controversy in the cause hereinafter mentioned, and the said witnesses were examined according to law, and the foregoing

depositions to which this certificate is attached were reduced to writing by myself in their presence, and that the said depositions were taken by me, reduced to writing, and subscribed by said witness-, as aforesaid stated, on the 19th day of May, in the year 1885, between the hours of 10 o'clock a. m. and 6 o'clock p. m. of said day, at the office of John C. Whitridge, a notary public in and for Wayne county aforesaid, at the northwest corner of 8th and Main streets, over the Second National Bank, in Richmond, Indiana. The taking of said depositions was commenced at 10 o'clock a. m. of said day.

I certify that I am not of kin or attorney of either of the parties hereto mentioned whose depositions are attached or to the parties to this action. I certify that the exhibits on said deposition- from "A" to "G," respectively marked, are the ones produced in evidence by said witness-.

I further certify that the foregoing depositions were taken in pursuance to the notice *and* hereto attached and at the time and place therein specified, to be used on behalf of the complainants as evidence in an action of — now pending in the circuit court of the county of Calhoun, State of Michigan, in which Nichols, Shepard & Co. are complainants and Elon A. Marsh, Minard Lafever, and James Scott defendants, and that the adverse party, the defendants in said suit, did attend the taking of such depositions, by their attorney, R. A. Parker, who appeared personally at the examination.

In testimony whereof I have hereunto set my hand and affixed my seal this 19th day of May, 1885.

JOHN C. WITHRIDGE,
Notary Public.

Notice.

Received of Shepard, Nichols & Co., by E. J. Hill, att'y, $10.50 for notary services, constable services, clerk's fees, and services rendered in this matter by me.

JOHN C. WHITRIDGE,
Notary Public.

366*b* STATE OF INDIANA, *Wayne County,* } *ss:*

I, William W. Schlater, clerk of the circuit court within and for the county of Wayne aforesaid, do hereby certify that John C. Withridge, Esq., whose certificate of acknowledgement appears to the instrument of writing to which this is attached, was at the date and at the time of making said certificate, to wit, the 19th day of May, 1885, a notary public in and for said county, duly commissioned and qualified, and that full faith and credit ought to be given to his official acts; that the signature purporting to be his is genuine, and that said certificate is executed in accordance with the laws of the State of Indiana, and the commission of John C. Whitridge will expire October 16, 1888.

In witness of which I hereunto affix the seal of the court and subscribe my name, at Richmond, this 20th day of May, 1885.

WM. W. SCHLATER, *Clerk.*

366*c* [Endorsed:] Nichols, Shepard & Co. *vs.* Elon A. Marsh, Minard Lafever, & James Scott. Depositions of Horatio N. Land & William D. Scott, for the compl'ts. Filed March 21, 1885. L. H. Brockway, register in chancery.

366*d* In the Circuit Court for the County of Calhoun. In Chancery.

NICHOLS, SHEPARD AND CO.
vs.
ELON A. MARSH, MINARD LA FEVER, and JAMES SCOTT.

SIR: Please take notice that on Monday, the 18th day of May, 1885, at ten o'clock in the forenoon, at the office of and before William E. Barton, notary public, No. 36 North Delaware street, in the city of Indianapolis, in the State of Indiana, I shall examine as witness- on the part of the complainant in this cause Lewis W. Hasselman and William E. Otter.

You are invited to attend and cross-examine the said witnesses. The testimony of said witnesses will be taken under the provisions of the statute relative to depositions of witnesses outside of the State of Michigan.

CHARLES F. BURTON,
Solicitor for the Complainants.

To R. A. Parker, Esq., solicitor for defendants Marsh and Le Fever.

To Messrs. Brown & Thomas, sol'rs for def't Scott.

STATE OF MICHIGAN, }
County of Wayne, }

CHARLES F. BURTON, being duly sworn, deposes and says that he served a true copy of the foregoing notice on R. A. Parker, sol'r for def'ts Marsh and Le Fever, personally on the 5th day of May, 1885, by delivering the same to him personally, and that he served the said notice on Messrs. Brown and Thomas by depositing the same, enclosed in an envelope, in the post office at Detroit, with postage fully prepaid and properly addressed to Messrs. Brown and Thomas, at Battle Creek, Michigan.

CHARLES F. BURTON.

Subscribed and sworn to before me this 16th day of May, 1885.

GEORGE MAITLAND,
Notary Public, Wayne County, Mich.

366e In the Circuit Court for the County of Calhoun and State of Michigan.

NICHOLS, SHEPARD & CO.
vs.
ELON A. MARSH, MINARD LA FEVER, and JAMES SCOTT.

Depositions of Lewis W. Hasselman and William E. Otter Taken Before Wm. E. Barton, Notary Public, in Above-Entitled Cause.

Present: Edward J. Hill, solicitor for complainant; R. A. Parker, solicitor for defendants, Marsh and La Fever.

Pursuant to the annexed notice the said solicitor for the defendants objects to the taking of the testimony under the notice hereunto annexed for the reason that the said Wm. E. Barton was not and is not now a notary public authorized by law to administer an oath, his said commission being dated on the 18th day of May, 1885, and running for the term of four years from the 18th day of May, 1885.

Depositions in behalf of complainant of Lewis W. Hasselman and Wm. E. Otter, taken before Wm. E. Barton, notary public, in above-entitled cause.

Present: Edward J. Hill, solicitor for complainant; R. A. Parker, solicitor for defendants Marsh and La Fever, pursuant to the annexed notice.

The said solicitor for the defendants objects to the taking of the testimony under the notice hereunto annnexed for the reason that the said Wm. E. Barton was not and is not now a notary public authorized by law to administer an oath, his said commission being
367 dated on the 18th day of May, 1885, and running for the term of four years from the 18th day of May, 1885.

LEWIS W. HASSELMAN, being duly sworn, doth on oath depose and say:

Int. 1. What is your name, age, residence, and occupation?

A. Lewis W. Hasselman; age, 64; residence, Indianapolis, Ind.; occupation, founder and machine moulder.

Q. 2. How long have you resided at Indianapolis?

A. Since 1850.

Q. 3. How long have you been engaged in such business?

A. Same time; since 1850.

Q. 4. You know the corporation known as Nichols, Shepard & Co., of Battle Creek, Mich.; if yea, how long have you known them and what is their business?

A. I know them as a firm building agricultural implements; have known them as such for 15 or 20 years.

Q. 5. How does their business compare with yours as to character and extent, generally?

A. The general character of their business is the same; in extent it is much larger and has usually been so.

Q. 6. Do you know the def'ts, Elon A. Marsh, Minard La Fever,

and James Scott, or any of them; if so, which and how long have you known them respectively?

A. I am acquainted with Mr. Marsh, only, of the firm of Marsh, La Fever & Co., and have had some acquaintance with him since January, 1881.

368 Q. 6. Please state where, when, and under what circumstances you formed the acquaintance of Mr. Marsh.

A. He called on me at the Eagle Machine Works here, in the city, in January 1, 1881, and represented drawings and specifications of a reverse gear for a traction engine.

Q. 8. How do you fix that date?

A. By a license made to the Eagle Machine Works for the use of that right in Jan., 1881, and signed by Marsh and La Fever, per E. A. Marsh.

Q. 9. You have the original license with you, and now produce it, do you, and it was signed in duplicate; Mr. Marsh kept one copy and you one?

A. Yes, sir.

By Mr. HILL: The complainant's counsel hereby notifies the def'ts' counsel to produce on the hearing of the cause the duplicate of said license testified to by the witness; also duplicates of similar licenses issued to Gaar, Scott & Co., of Richmond, Ind.; J. I. Case Threshing Machine Co., of Racine, Wis.; Russell & Co., of Massillon, O., and of other licenses issued by Marsh & La Fever and Marsh, La Fever & Co. under letters patent issued to Elon A. Marsh and his assigns for Marsh's steam-engine valve gear.

Q. 10. What representations, if any, were made to you by Mr. Marsh, prior to the execution of the aforesaid license, as to its use, etc.? Please state in your answer as near as you can substantially what Mr. Marsh said to you concerning his invention at that time.

A. He said that he had made arrangements with Gaar, Scott & Co., of Richmond, and they were putting it on an engine at
369 that time, and that he came to Indianapolis to try to make arrangements with the Eagle Machine Works to use it. He represented it as being a successful device, and that Nichols, Shepard & Co., of Battle Creek, Mich., were using it, and to explain its simplicity and adaptability to the use it was gotten up for he proposed to put one on that we might test it, and while we were at that he made one or two trips between Indianapolis and Richmond and represented that he was putting one on for Gaar, Scott & Co., and that by going back and forth he could save himself some time. With his assistance and instruction we put one on an engine, and being satisfied at the time we made an agreement with him to use them.

Q. 11. What of those representations satisfied you and induced you to take the license?

A. Nichols & Shepard being a large manufactory, and also as Gaars were building more engines than we were, those manufacturers adopting it and using it had an influence on us trying it.

Q. 12. To what extent, if any, did he represent that Nichols, Shepard & Co. were using or had used the device, and what were

his representations, if any, as to the manner in which the said invention had been tested?

A. That they were large manufacturers and had had success in using them, and that Gaars were manufacturing a great many engines and were going to use the device, and these representations had some inducement towards us adopting it.

Q. 13. Have you any means of knowing the precise date of this license—I see the day is left blank?

A. The endorsement is Jan. 10, and from usual course of business judge that is the date.

370 Q. 14. To what extent have you manufactured engines to which you have applied this device?

(Objected to, without waiving former objection, as immaterial by Mr. Parker.)

A. In the neighborhood of 40 or 50.

Q. 15. How many traction engines to which the device was properly applicable have you manufactured since taking the license?

(Same objection by Mr. Parker.)

A. We have used the sleeve motion, as they call it, and the link motion; could not say on how many engines.

Q. 16. Have you seen Mr. Marsh or had any interview with him since taking the license?

A. Yes; he has been here two or three times since then.

Q. 17. The Eagle Machine Works have paid him or his firm royalties for the devices manfactured under the license, have they not?

A. Yes, sir.

Cross-examination by Mr. PARKER (without waiving any objections):

Q. 18. Did Marsh say anything about by what authority Nichols, Shepard & Co. were using the device?

A. I do not think he did, but my recollection is he had assisted them to put it on or was working for them.

Q. 19. The point of it was, they were using it at the time he came here?

A. Yes, sir.

Q. 20. Did you take the license before or after you had tried it?

371 A. After.

Q. 21. I think you said that he said Gaar, Scott & Co. had taken a license?

A. He said that; yes.

Cross-inter. 21½. Mr. Hasselman, you have had some correspondence with Mr. Marsh in the last few days in relation to this testimony, have you not, and wrote him with reference thereto on the 15th inst. at Battle Creek, Michigan?

(Objected to by Mr. Hill unless the letter or correspondence referred to is produced.)

A. Yes, sir.

LEWIS W. HASSELMAN.

WM. E. OTTER, second witness, being duly sworn, testified and said (under objection by Mr. Parker that Wm. E. Barton is not a notary public, as heretofore stated):

Int. 1. What is your name, age, residence, and occupation?

A. Wm. E. Otter; residence, Indianapolis, Ind.; age, 49; occupation, machinist.

Q. 2. What was your occupation in Jan., 1881, for whom were you then employed, and how long have you been a machinist?

A. I have been a machinist for 30 years; was employed by the Eagle Machine Works as foreman in 1881; have been employed since and before then 7 years in that capacity up to this time.

Q. Do you know the parties to this suit? If so, state how long you have known them respectively.

A. I have known N., S. & Co. as manufacturers for 10 or 15 years. I only know Marsh, of the defendants.

372 Q. 4. You first made his acquaintance here when he came to put this device on?

A. Yes, sir.

Q. 5. What part had you to do in the matter of the taking of the license by the Eagle Machine Works from Marsh and La Fever in Jan., 1881, or in putting on the device covered by the license?

A. I had nothing to do with the taking of the license at all. I furnished the material and workmen to put the device on at the time as foreman of the Eagle Machine Works under the direction of Mr. Lewis W. Hasselman. He is president of the company.

Q. 6. You heard the testimony of Mr. Hasselman as it was given this morning and taken down in the deposition, did you not?

A. All but the last question.

Q. 7. Did you hear the representations made by Mr. Marsh?

A. Only what was said to myself.

Q. 8. When, where, and what was said to yourself by Mr. Marsh of the device and as to its having been tested?

A. He explained its merits as being better than the link we were using at the time on the traction engines. It was the first time he was at the shop before the license was taken. He said it had been tested by Nichols and Shepard, and that they liked it so well they were going to adopt it.

Cross-examination by R. A. PARKER, Esq.:

Q. 9. Did he say anything about what terms or upon what terms they were to adopt it?

A. He did not.

373 Q. 10. Did he say anything about their having any right to use it or anything of that kind?

A. As near as I can recollect, he only spoke as if they were going to use it the same as we were.

Q. 11. There was nothing said as to whether they were going to take out a license or not?

A. Not that I can recollect of now. He did mention the second time he was here about Gaar, Scott & Co. taking a license.

Q. 12. Was there anything said by him—anything further than that Nichols, Shepard & Co. were using the device?

A. That is all that I can recollect of. He just spoke in that way, as though Nichols and Shepard were using it.

WM. E. OTTER.

373*a* STATE OF INDIANA, } *ss:*
Marion County, }

I, Wm. E. Barton, notary public in and for the county of Marion, State of Indiana, duly commissioned and sworn, do hereby certify that on Monday, the 18th day of May, 1885, the witness- named in the annexed notice and caption hereto, Lewis W. Hasselman and Wm. E. Otter, personally appeared before me at my office, No. 36 North Delaware street, in the city of Indianapolis, in said county and State, and after having taken an oath that the answers given by each of them to the interrogatories proposed to them and each of them should be the truth, the whole truth, and nothing but the truth, which oath was administered by me and taken by each of said witnesses with uplifted hand, according to law.

That the depositions of each of said witnesses *was* taken and reduced to writing by me, the said notary public, at the time and place mentioned in said notice, and were concluded on the same day as they are hereinbefore set forth.

That during the taking thereof the complainant attended by Edward J. Hill, Esq., its solicitor, and the defendants Marsh and Le Fever attended by R. A. Parker, Esq., their solicitor; that I am not of kin to any of the parties and have no interest in the event of the said suit.

That these depositions were taken on behalf of the complainant in a cause now pending in equity in the circuit court of the county of Calhoun, in the State of Michigan, wherein Nichols, Shepard & Co., a corporation, is complainant and Elon A. Marsh, Minard Le Fever, and James Scott are defendants; that the depositions were duly read over to the witnesses respectively before signing, and that the said witnesses afterward signed the same in my presence and the presence of the counsel of both parties.

In witness whereof I have hereunto set my hand and affixed my official seal, at Indianapolis, Ind., this 18th day of May, 1885.

WILLIAM E. BARTON, [SEAL.]
Notary Public.

Notary's fees, $5.50; attendance, $5.00; total, $10.50, paid by complainant.

STATE OF INDIANA, } *sct:*
County of Marion, }

I, Moses G. McLain, clerk of the circuit court within and for the county and State aforesaid (the same being a court of record), do hereby certify that William E. Barton, whose name is subscribed to the certificate to the annexed instrument, was at the date of taking

such depositions, May 18th, 1885, an acting notary public within and for the county aforesaid, duly commissioned and qualified and authorized to take the same, and, further, that I am acquainted with the handwriting of said William E. Barton, and that the said signature purporting to be his is true and genuine and the said instrument executed in accordance with the laws of the State of Indiana.

[SEAL.] In testimony whereof I have hereunto set my hand and affixed the seal of said court this 18th day of May, 1885.

MOSES G. McLAIN, *Clerk.*

373*b* Depositions of Samuel Bradley & James Ellsworth, of Battle Creek, Calhoun county, Michigan, witnesses produced, sworn, and examined on the tenth day of June, in the year 1885, at 93 Griswold street, Detroit, before me, a notary public, pursuant to the notice hereto annexed and for the reason therein stated, to be used in a certain cause now depending in the circuit court for the county of Calhoun, between Nichols, Shepard & Co., complainant, and Elon A. Marsh, Minard La Fever, and James Scott, defendants, on the part of the said complainant.

In the Circuit Court for the County of Calhoun. In Chancery.

NICHOLS, SHEPARD & CO.
vs.
ELON A. MARSH, MINARD LA FEVER, and JAMES SCOTT.

SIR: Please take notice that on the 10th day of June, at one o'clock in the afternoon, Samuel Bradley and J. B. Ellsworth will be examined as witnesses on the part of the complainant in this cause before George Maitland, Esq., a notary public in and for the county of Wayne, at his office, in Detroit, in said county, at which time and place you are at liberty to appear before the said notary and put such interrogatories to the said witnesses as you shall think fit. The reason for taking said deposition is that the said witnesses are about to depart from the State and will not return so as to be present at the hearing of the said cause.

Detroit, June 8, 1885.

Yours, etc., CHARLES F. BURTON,
Solicitor for Complainant.

To R. A. Parker, Esq., solicitor for defendants Marsh and La Fever.

I hereby accept service of a copy of the above notice.
June 9th, 1885.

R. A. PARKER,
Sol'r for Marsh & La Fever.

373*c* SAMUEL BRADLEY, a witness produced and sworn on behalf of the complainant, in answer to interrogatories propounded to him testified and said:

Q. 1. State your name, age, residence, and occupation.

A. Samuel Bradley; 40 years old; residence, city of Battle Creek, Calhoun county, Michigan; working for Nichols, Shepard & Co., selling machines.

Q. 2. Will you state whether or not you are about to go out of the State of Michigan; and, if so, when you intend to leave and how long you suppose you will be gone?

A. Yes, sir; I intend to go out of the State on Monday next. I shall be absent about five weeks, probably.

Q. 3. Will you state whether you knew the defendant, Mr. Marsh, and the other defendants, La Fever and Scott?

374 A. I know Mr. Marsh and La Fever, but am not acquainted with Mr. Scott.

Q. 4. Will you state where you were employed and what you were doing in the latter part of 1880?

A. I was to work for Nichols, Shepard & Co.; was in capacity of engineer—handling their engines at fairs and other places.

Q. 5. Do you remember the time when a change was made in the device used on the engines of Nichols, Shepard & Co. for reversing the motion of the engine?

A. Yes, sir.

Q. Did you see the first one of the new style of devices that were put on?

A. Yes, sir.

Q. Will you state what you know about that being put onto the engine in your own way?

A. Well, you want to know when it was put on. Mr. Marsh put the device on for reversing at Nichols, Shepard & Co.'s shops. It was either the last of August or the first of September—I don't remember the exact date—in 1880.

Q. State what Mr. Marsh did in putting on that device.

A. Well, he took off the plain eccentric and put in place of that a reverse gear which consisted of two pinions—one attached to the main shaft, the other attached to a sleeve that centered around the main shaft, which allowed it to revolve a part of the way around, and then from that gear was a reach rod reaching to the back end of the engine attached to a lever and quadrant. The valve rod was attached to a crank pin on the movable pinion.

375 Q. What was there on the device when it was first put on that prevented the movable pinion from moving too far?

A. Nothing but the notches in the quadrant.

Q. By quadrant you mean the arc of a circle which was placed at the rear end of the boiler and some distance away from the pinion, do you not?

A. Yes, sir.

Q. Was any change made in the method of stopping the movement of the movable pinion in that device within a short time; and, if so, what was it?

A. Yes, sir; there was. There was a stop attached to the boiler for the end of the swing arm to strike on one side and the box of the gear on the other.

Q. Did you afterwards have anything to do with this engine during that fall?

A. Yes, sir; I did.

Q. What was it?

A. I went with it, the engine, to two fairs; one at Springfield, Ill.

Q. Who went along with you?

A. Mr. J. B. Ellsworth and Mr. Marsh went from the factory with me.

Q. Will you state what Mr. Marsh did in connection with that engine at those fairs?

At the request of defendants' attorney Mr. J. B. Ellsworth withdraws from the hearing of this testimony.

A. He opened and closed the throttle-valve and reversed the engine.

Q. Did he do this for the purpose of showing the workings of the reverse gear?

376 A. Yes, sir.

Q. What, if anything, did Mr. Marsh say to you or to any other person in your presence as to the intention of Nichols, Shepard & Co. to make use of that reverse gear on the engines that they should manufacture in the future?

A. Mr. Marsh told me that Nichols, Shepard & Co. had concluded to use that gear. That was before we went to the fair.

Q. What did he say to any other person that you heard with reference to their use of the engine?

A. He talked to other manufacturers or their agents at these fairs as though Nichols, Shepard & Co. were to use the device, and also to customers of Nichols, Shepard & Co. and agents at these fairs, and we all of us understood that that was to be used and all of us talked that at the fair.

Q. Can you give the names of any persons to whom Mr. Marsh represented that Nichols, Shepard & Co. were intending to use that device as a reverse gear?

A. There was Mr. Ray, of Kansas City, and I heard him talking to Mr. Curtin, of Garr, Scott & Co.; also with a Mr. Kratz, of Beavensville, Ind.

Q. How long was Mr. Marsh out with you?

A. About two weeks.

Q. Did you pay any portion of his expenses?

A. I did.

Q. How much?

A. I do not remember the amount. It was at the time we left St. Louis for Battle Creek. I think it was $7.00, or about the fare from St. Louis to Chicago.

Q. Did Mr. Marsh refund the money to you, or what did you do about it?

377 A. There didn't any one else refund the money to me. I charged it up in my expense account as so much money to Mr. Marsh.

Q. To whom did you present the expense account?

A. To Mr. Roberts, head book-keeper of Nichols, Shepard & Co. at that time.

Q. Was it allowed as a proper expense?

A. Yes, sir.

Q. What changes were necessary in mounting this reverse gear on an engine—in the cylinder of the engine?

A. There were no changes in the cylinder, but in the steam-chest. It had to be made longer.

Q. Will you state, if you know, what was done in this particular engine to make the steam-chest longer?

A. The one end of the steam-chest was clipped out inside, and also part of the bolts that held the cover and steam-chest to the cylinder were chipped away.

Q. For what purpose?

A. To allow the valve to go back far enough to reverse it.

Q. Will you state whether or not the chipping of that steam-chest and bolts injured that particular engine in any way or whether it could afterwards be used as well as it could before?

A. It couldn't be used as well, but had to be replaced with a new cylinder and also a new steam-chest.

Q. For what reason?

A. After chipping away there was not surface enough left to hold the packing to its place.

378 Q. Will you state whether or not it became necessary in using these valve gears to make cylinders and steam-chests somewhat longer than they had been previously made with the link reverse?

A. It was necessary to make the steam-chest longer.

Q. Will you state whether or not the steam-chest and cylinder that were on the engine that you had at St. Louis were afterwards used or whether they became useless?

A. They were taken off and new ones put on.

Cross-examination by Mr. PARKER:

Q. How long have you been in Michigan on this occasion?

A. I don't know as I exactly understand the meaning of your question.

Q. You are now in Michigan?

A. Yes, sir.

Q. How long have you been in here?

A. Since last Friday.

Q. Were you here a week ago last Monday?

A. No, sir.

Q. From whence did you come to Michigan?

A. From Janesville, Wisconsin.

Q. And from whence did you come from Janesville, Wis.?

A. I came from Jefferson, Wisconsin, to Janesville.

Q. And from whence to Jeffersonville?

A. Came from Madison, Wis., to Jefferson, Wis.

Q. And where from to Madison?

A. Went from Milwaukee to Madison.

Q. And where from to Milwaukee?

379 A. I went from Battle Creek to Milwaukee.

Q. When did you leave Battle Creek to go to Milwaukee?

A. The 26th day of May.

Q. How long had you been at Battle Creek?

A. Three or four days.

Q. And from whence did you come to Battle Creek?

A. From Sherman, Texas.

Q. And how long had you been in Texas?

A. Since the 13th day of April.

Q. And from whence did you go to Texas?

A. From Battle Creek to Texas.

Q. How long have you been in the employ of Nichols, Shepard & Co.?

A. Pretty near 11 years.

Q. Continuously?

A. Yes, sir; no, not exactly that; all except about a month about seven years ago.

Q. Your movements generally in traveling are subject generally to their control, are they not?

A. Not always.

Q. With what exception?

A. They sometimes leave it to my own judgment.

Q. Did you come from Texas to Michigan by their direction?

A. Yes, sir.

Q. Go to Wisconsin by their direction?

A. Yes, sir.

Q. You're under salary, I presume?

A. Yes, sir; I work for pay.

Q. Did you come here by their direction?

A. Yes, sir.

380 Q. You were not subpœnaed, then?

A. I couldn't say that I was.

Q. You talked with E. C. Nichols, I presume, about what you could testify to before coming here?

A. Oh, yes; yes, sir.

Q. Told him what you would say?

A. I told him what I knew about this case.

Q. How long ago was that?

A. I don't remember the exact date, but it was in the winter, I think—some time, I think, in February—the first talk I ever had with him about this.

Q. When was your attention first called to the subject-matter of this case and what you could say with reference to it?

A. Well, I told you I didn't know exactly when it was. I think it was in February of this year.

Q. Were you in Battle Creek in April, '82, and did you give testimony in a certain interference case in the Patent Office of the United States, between Nichols, Shepard & Co., as assignee of one Andrew

J. Hoag, and Elon A. Marsh, before Eugene M. Converse, notary public?

A. Yes, sir.

Q. In 1880, when this reverse gear was put upon that engine, as you have stated, what was your special business in your employment for Nichols, Shepard & Co.?

A. At the time they put the gear on the engine I was building a shed to test engines under.

Q. How long were they at work putting that gear on?

A. I don't know as I could tell you exactly how long, but I should think a week or ten days. It might have been longer than that.

381 Q. You gave it special attention, I presume?

A. Yes, sir.

Q. How often did you see the work being done?

A. Well, all the time they were at work at it—that is, all the time that they were putting the work upon the engine.

Q. Did you have anything to do with it yourself?

A. Not particularly; no, sir.

Q. How far was the shed from the engine?

A. Directly over it.

Q. And they were putting the gear on the engine in the shed you were building?

A. Where the shed would be when it was done.

Q. Was the engine tested there?

A. It fired up and run there.

Q. Was that their usual testing ground?

A. Yes, sir.

Q. Now, Mr. Bradley, don't you know that up to 1882 there never has been a shed over where that engine was tested?

A. I know there has been one there before that.

Q. Don't you know there hasn't been a shed over that testing ground from that time down to 1882?

A. There was a shed there in '80, and since then a building on that ground for testing engines in.

Q. How long were you at work on that shed?

A. Well, off and on, for two weeks.

Q. How long did you work on it after this test made?

A. Not at all, only to tear it down.

Q. From the time the reverse gear was put on this engine until you went to the fair with it, what were you doing?

382 A. A part of the time I was at Jefferson, Wisconsin, and a few days before the fair I was at home.

Q. How long were you at the fair?

A. About two weeks.

Q. Which one did you go to first?

A. Springfield, Illinois.

Q. And where next?

A. St. Louis, Missouri.

Q. Who went with you from Battle Creek?

A. Mr. J. B. Ellsworth and Mr. Marsh.

Q. Did you have any special departments of the work to do between you at the fairs?

A. Yes, sir.

Q. What were they?

A. My business on the fair ground was to guide the engine, fire it, keep it clean, &c., and also to keep the separator clean and oiled up. *A.* Mr. Ellsworth generally done the talking to the customers and agents, and also had charge of the exhibit. Mr. Marsh run the engine—that is, showed the reverse gear and gave the engine steam and shut it off.

Q. That is to say, Mr. Marsh's duties were those of the engineer, as I understand it?

A. No, sir; not all; he didn't do all the engineer's duties.

Q. On these fair grounds you located your engine and separator, put them in running order, and then ran the engine as a stationary engine for the principal part of the time, didn't you?

A. No, sir; for only a small part of the time.

Q. What were you doing the rest of the time with it?

383 A. Running the engine to show the working of the traction part—that is, showing how we could run backwards and forwards, and also turning, getting in line, putting on the belt, and running the separator.

Q. Did you have any other engine there?

A. No, sir.

Q. Then if the separator was ran at all it had to be run by this engine?

A. It did.

Q. And run as a stationary engine then?

A. Yes, sir.

Q. Did you hear all the talks or conversations between Mr. Marsh and these other people?

A. No, sir; I presume not.

Q. Did you hear all that he said to Mr. Ray?

A. I should presume not.

Q. When you say that all of us understood that Nichols, Shepard & Co. were to use this device do you mean to swear that Mr. Ray understood that such was the case?

A. Yes, sir; I do.

Q. Who was Mr. Ray?

A. He was agent for Nichols, Shepard & Co., Kansas City, Mo.

Q. And is still, is he not?

A. Yes, sir; I think so.

Q. How do you know, Mr. Bradley, what Mr. Ray understood? How can you swear to anything of that kind?

A. By hearing Mr. Ray talk in that way to customers?

Q. You can't give the details of all the talk and conversations that were had when at the fairs, can you, on this matter?

384 A. No, sir.

Q. You had some trouble with Mr. Marsh, didn't you, down there?

A. Not any particular trouble.

Q. Didn't you threaten to whip him?
A. No; I didn't.
Q. Did you say you would lick him, or words to that effect?
A. No, sir.
Q. Didn't you threaten him on one occasion to knock him off the engine?
A. I believe I told him if he insisted on running the engine fast through a crowd I would see how far I could knock him.
Q. Then you did have some trouble with him?
A. Oh, no, no; no trouble at all.
Q. Some time you didn't speak to him, wasn't there; weren't on speaking terms?
A. If I was it was because I didn't have anything to say.
Q. You say that Marsh told you that Nichols, Shepard & Co. had concluded to use that gear. When and where was that?
A. After I returned from Wisconsin, in front of the paint shop of Nichols, Shepard & Co.
Q. Any one else present?
A. Not just then.
Q. How long was this before you went to the fair?
A. Only a few days—three or four, I should think.
Q. About when did you go to the fair, what time of the year, as near as you can fix it?
385 A. About the last week in September.
Q. Have you stated Mr. Marsh's exact language in that conversation?
A. As near like it as I can recollect.
Q. Then you don't swear it was exactly the language, word for word?
A. Oh, no; I couldn't do that.
Q. Can you state the exact language of any conversation or statement that you say he made?
A. I probably couldn't give the exact words.
Q. How old are you, Mr. Bradley?
A. 40 years old.
Q. You haven't given and don't pretend to have given Mr. Marsh's language in any of these conversations, have you?
A. I pretend to have given it as near as I can remember it.

Question repeated and answer required, yes or no.

A. I have given it as near as I can remember.
Q. Do you say you have given his language?
A. As near as I can remember it.

The defendants' counsel insists upon an answer, yes or no.

Q. Do you swear that is his language?
A. As near as I can remember it.

Redirect examination by Mr. BURTON:

Q. Have you been in the habit of attending fairs with engines

and do you know how many men are necessary to handle the amount of machinery which you had at the Springfield and St. Louis fairs?

A. I am in the habit of attending fairs and know how many men we generally use at such places.

386 Q. Was the assistance of Mr. Marsh necessary at those places in showing those engines?

A. It was not necessary to show the engine aside from that device.

Q. What was the cause of any difference of opinion between you and Marsh, as spoken of in your cross-examination?

A. You mean in regard to the work there?

Q. Yes; or anything else.

A. I don't know as I exactly understand your question.

Q. What did Mr. Marsh do that you don't like, or what did he refuse to do that you thought he ought to do?

A. I thought he ought to have taken hold and helped do the work of getting the goods onto the ground and setting them up and help keep them clean and in running order.

Q. Did he refuse to do that; and, if so, what reason did he give for refusing?

A. He said he wasn't sent there for that, and that he would run the engine, and that was what he was there for.

Q. What was he doing at the time you used the language as testified to by you about seeing how far you could knock him?

A. He was running the engine fast through a crowd of people.

Q. What did he say that occasioned the language?

A. He said he should run the engine as he thought proper or he wouldn't run it at all.

Q. Did you object to his running it fast?

387 A. Yes, sir.

Q. Was there anything more about the matter afterwards?

A. There was something said about it just before we came home. Marsh wanted to know if our words would make any difference to my report to Nichols, Shepard & Co., or something of that kind. I don't remember exactly what it was.

Q. And what did you reply?

A. I told him it wouldn't make any difference; that I was well pleased with the reverse, and I thought every one else was, and I should tell Nichols, Shepard & Co. so.

Q. When you went away to Jefferson was the entire apparatus completely mounted upon the engine, so that it would work satisfactorily when the engine was used as a traction engine?

A. No; it wasn't.

Q. In what state was it?

A. The device reversed the engine all right when it was standing still, but when they applied the traction it would not work it.

Q. What was doing to remedy the defects at that time?

A. They were at work getting a stop or fixing a stop on the engine close up to the gear.

Q. What had been the cause of the difficulty up to that time?

A. They could not get a reach rod stiff enough to hold the gear in position and drive the traction.

Recross-examination.

Q. You were sworn in the interference case about the putting on of that stop plate, were you not?

388 A. I was.

Q. Did you see it applied?

A. I did not; not until after it was on the engine in the paint shop.

Q. When did this difference of opinion as to your duties respectively begin between you and Marsh?

A. Well, on my part when we came to unload the machines at Springfield.

Q. Who had charge of this party?

A. Mr. J. E. Ellsworth.

Q. You state that Marsh asked you about your report or if the feeling would make any difference in your report to Nichols, Shepard & Co. How did that matter arise?

A. Well, really, I don't know as I could tell how.

Q. Why did you tell him that you would tell Nichols, Shepard & Co. that you and others were well pleased with the reverse?

A. Because that was the facts of the case, as far as I know.

Q. That appeared to be satisfactory to him, did it not?

A. I don't remember as he objected to it in any way.

Q. He didn't ask you to tell them so?

A. Oh, no; I don't think he did; I know he didn't tell them so.

Q. Did you make any report?

A. Yes.

Q. Was that report in writing?

A. No, sir.

Q. Who was it to?

A. To Mr. E. C. Nichols.

389 Q. When was that?

A. After the St. Louis fair.

Q. Well, how long after?

A. Well, I can't tell exactly, but somewhere about a month after.

Q. Did you tell him how the reverse gear worked?

A. I presume I did.

Q. Do you know whether you did or not?

A. Well, I think I did.

Q. How many men usually go with your engines to fairs?

A. Sometimes more and sometimes less.

Q. Well, how many are sometimes more and sometimes less?

A. Sometimes one and sometimes three or four.

Q. How many times have you been with engines?

A. I couldn't tell you; a good many; I forgot how many.

JAMES B. ELLSWORTH, a witness produced and sworn on behalf of the complainant, being first fully sworn, did testify and say:

Q. State your name, age, residence, and occupation.

A. Name is James B. Ellsworth; residence, Battle Creek, Calhoun county, Michigan; age, 48; occupation, traveling agent for Nichols, Shepard & Co.

Q. Will you state whether or not you are about to leave the State of Michigan; and, if so, when and how long will be absent?

A. I guess I will go Friday evening.

Q. How long will you be away?

390 A. From four to eight weeks.

Q. Will you state whether you know Mr. Marsh, Mr. La Fever, and Mr. Scott, the defendants?

A. I know Mr. Marsh; do not know Mr. Scott or Mr. La Fever; know Mr. Scott by sight, but am not personally acquainted with him.

Q. Do you know the reversing device which in 1880 was placed upon a traction engine which was during that autumn exhibited at the State fairs at Springfield, Ill., and St. Louis, Mo.?

A. I know there was such a device.

Q. Did you attend those fairs and have the engine with the device on under your charge?

A. I did.

Q. Will you state whether Mr. Marsh was one of the parties accompanying you to those State fairs and engaged in the exhibition of that engine?

A. He was.

Q. What were his duties in connection with the engine, or what did he do in connection with the engine?

A. He handled the reversing attachment and kept it in order.

Q. Did you hear him say anything with reference to the future use of that device by Nichols, Shepard & Co.; and, if so, what?

A. I can't say that I ever heard him say anything in particular about their using it.

Q. Did you pay any part of Mr. Marsh's expenses on that trip?

A. Yes, sir.

Q. What were they?

A. I paid a portion of his board at Springfield and his room rent at St. Louis.

391 Q. Have you recovered the money from him or any other person?

A. I charged it in my expense account to Nichols, Shepard & Co., and they allowed it.

Q. How much were you around the engine yourself?

A. I was there every day; sometimes at the engine and sometimes at the separator.

Q. What, if anything, did you hear Mr. Marsh say about the reversing device?

A. I heard him praise it very highly; thought a good deal of it, nothing else particular.

Cross-examination by Mr. PARKER:

Q. Who had charge of the party?

A. I had.

Q. Marsh ran the engine, did he not?
A. No, sir; run a part of it.
Q. What part?
A. The reversing part.
Q. Didn't he operate the throttle valve?
A. Sometimes.
Q. How much money did you pay for his expenses, if you remember?
A. I paid $6.00 at one time and $7.00 at another.
Q. You generally did the business talking with the customers of Nichols, Shepard & Co. and the public at those places?
A. I did.
Q. Was their authorized agent for that purpose?
A. No, sir.
Q. You saw Marsh frequently?
A. Yes, sir.
Q. Talked with him often?
392 A. Yes, sir.
Q. State how you were occupying rooms.
A. At Springfield we had separate rooms; two of us together; can't remember which two. At St. Louis we were all together in one room.
Q. Marsh and Mr. Bradley didn't agree very well, did they?
A. They did not all the time.
Q. How much of the time was Mr. Ray, of Kansas City, with you?
A. He came the second day of the fair at Springfield and was with us during the St. Louis fair.
Q. That made four altogether of the party after he came?
A. Yes, sir.
Q. Do you remember Marsh paying for some machine work at St. Louis and also the toll at the St. Louis bridge, and paid some helpers on the fair grounds?
A. I know there were such items, but I can't recollect who paid them.

Redirect examination by Mr. BURTON:

Q. Was Mr. Marsh's presence necessary with that party in order that the machine might be properly exhibited?
A. It was not.

Recross-examination:

Q. Do you mean that one man besides yourself was sufficient?
A. Yes, sir.

393 I, George Maitland, notary public for the county of Wayne, do hereby certify that the foregoing depositions of Samuel Bradley and James B. Ellsworth were taken before me at my office, in the Buhl building, Detroit, Wayne county, Michigan, on the 10th day of June, in the year 1885, on the part and at the request of the above-named complainant; that the said deposition was taken pur-

suant to the notice, a copy of which, with an acceptance of the service thereof written thereon, is hereto annexed, and that the manner of taking the said deposition was as follows, to wit: The said witnesses were first duly sworn by me to testify the truth, the whole truth, and nothing but the truth relating to the said cause. He was then examined by C. F. Burton, Esq., attorney for the complainant, upon verbal interrogatories propounded to him by the said C. F. Burton, Esq., and the said several interrogatories, with the answer of the said witnesses to each of them severally, were carefully written out by Octavia Daniel in my presence, after which the said deposition was correctly read over to the witnesses and, being approved by the said witnesses, was then and there subscribed by them.

I do further certify that at the taking of the said deposition R. A. Parker, Esq., attorney for the defendants in said cause, attended before me and put such interrogatories to the said witnesses as he thought proper.

GEORGE MAITLAND,
Notary Public, Wayne County, Michigan.

[Endorsed:] 162. Received by mail and filed this 12th day of June, 1885. Leonidas H. Brockway, register in chancery. Deposition of Bradley and Ellsworth.

394 *Findings of the Court.*

STATE OF MICHIGAN:

The Circuit Court for the County of Calhoun. In Chancery.

NICHOLS, SHEPARD & CO.
vs.
ELON A. MARSH and MINARD LA FEVER.

Defendant Marsh in the year 1880 represented to complainant that he was the original inventor of a reversing gear for steam-engines and requested its aid in testing and exhibiting it with a view to its introduction, which, by reason of its facilities for manufacture and organized business, it was in a good situation to render. As an inducement he offered to give it the right to use his invention upon its engines free of cost.

This arrangement was made and carried out, so far as complainant was concerned, and it applied the device to its engines thereafter.

Subsequently the parties had negotiations, apparently looking to the joint handling of the invention by them, in which they failed to reach a satisfactory arrangement. Meantime Marsh obtained from the office what he claims to be a patent and asserts a right to the invention to the exclusion of the complainant, and one or more suits for infringement have been commenced by him and his assignees against complainants.

395 He also has publicly denied complainant's right to the use of the invention, threatening one or more persons with suits

if they purchased engines from complainant having this gear attached.

In this litigation complainant has denied the validity of defendants' patent and the originality of the invention, but the fact remains, as clearly disclosed by the evidence, that complainant at an early stage of the invention and patent proceedings purchased and paid what both then considered a fair price for the right to use this invention, which right it has never surrendered or lost.

It only remains to consider whether equity can afford relief in this case. Among the reasons alleged and relied upon by defendants why complainant is not entitled to the relief prayed are: 1st. That the complainant has an adequate remedy at law. 2d. That at most defendants are guilty of a slander of title against which equity will not relieve.

Under the facts found the complainants have the right to manufacture and sell this device with their engines. It is the duty of defendants, by reason of the contract, to permit it. This duty is more than the mere duty of every man to respect and not invade the rights of others. It is intensified by the contract relation, by his promise and the consideration upon which it is based, and he has no reason to complain at being asked to desist from conduct which, though a mere slander, if perpetrated by a stranger, is a breach of contract when indulged in by him.

If the witnesses in the case are to be believed, he is deliberately endeavoring to prevent complainant from reaping the benefit of his contract, thereby violating his own agreement.

396 But it is further maintained that relief should not be granted because complainant might have brought suit for damages for the breach of his contract. This position is believed to be untenable. The value of this right consists in its use in connection with the other machinery of the complainant. Already acting upon their clear right, complainant has placed it upon the market as an improved reversing gear.

If defendants are to be believed, it is incomparably superior to any other device for the purpose, and, we may reasonably suppose, will be preferred by purchasers of traction engines. To deny complainant the right to use it is to defeat sales not merely of the reversing gear, but other valuable machinery as well, and it is highly probable that threatened future injuries are of more importance to it than damage for past ones.

The evidence is clear that defendants' purpose was to prevent the use by complainant of this gear. They have approached and cautioned at least one customer, and they openly assert their intention by their suits and by the defense set up in this suit; all of which tend to the injury of the complainant's business to that degree that warrants intervention by equity.

Complainants may take decree as prayed.

FRANK A. HOOKER,
Circuit Judge.

[Endorsed:] 5–162. Nichols, Shepard & Co. *vs.* Elon A. Marsh *et al.* Findings of court. Filed Sept. 14, 1885. Leonidas H. Brockway, register in chancery.

397 *Decree.*

Circuit Court for the County of Calhoun.

At a session of the circuit court for the county of Calhoun, sitting in equity, pursuant to adjournment, on the 31st day of October, A. D. 1885.

Present: Honorable Frank A. Hooker, judge of said court.

NICHOLS, SHEPARD & CO.
vs.
ELON A. MARSH, MINARD LA FEVER, and JAMES SCOTT.

This cause came on to be heard on the 10th day of August, A. D. 1885, before the Honorable Frank A. Hooker, judge of said court, and was argued by counsel for the respective parties; and thereupon, after due consideration, the said court now here finds that the said defendant Marsh, in the month of September, 1880, entered into a contract with the said complainant, by the terms of which contract complainant was to be permitted thereafter to use, without claim on the part of said Marsh, on steam-engines manufactured by it a certain invention relating to the valve gear, which was thereafter, pursuant thereto, placed, under the superintendence of said Marsh, upon an engine then in the yards of the complainant, which was thereafter sent for exhibition to the State fairs of both Illinois and Missouri.

398 And the court further finds that defendants La Fever and Scott, as assigns of said Marsh, have become interested in said invention since said contract was entered into, but that the rights of complainant under said contract, according to its tenor and effect, are superior and paramount to the rights of said La Fever and Scott.

And the court further finds that by the terms of the said contract complainant was to do and perform in and about the said device certain things and conditions, all which have been done and performed by it; but that, on the contrary, the said Marsh (and his assigns, the other defendants) have not carried out and performed the same, in that they have denied the existence of said contract and asserted rights and interfered with and molested the complainant in the prosecution of its business, contrary to the tenor and effect of the said contract.

And therefore the court doth now order, adjudge, and decree that the said contract ought to be carried out and performed on the part of the said defendants, and doth order and decree that the said defendants, Elon A. Marsh, Minard La Fever, and James Scott, do refrain and desist from asserting that complainants have not the full and complete right to make, use, vend, and put into practice or operation the said invention substantially in the same form and

style as that exhibited on the said engine made in 1880, about the time of the making of said agreement and according to its terms.

It is further ordered, adjudged, and decreed that the said defendants do desist and refrain from publishing or asserting, con-
399 trary to the terms of said contract, that they have any right to the exclusion of said complainant in and to the said device.

It is further ordered, adjudged, and decreed that the said contract made between complainant and Elon A. Marsh, of the tenor and effect by which complainant was to be permitted to use, vend, and employ said device on all the engines made by the complainant without molestation or interference on the part of said Marsh or his assigns, by them and each of them, be specifically carried out and performed.

It is further ordered and decreed, therefore, that the writ of injunction of this court may issue to the said Elon A. Marsh, Minard La Fever, and James Scott, directing them to abstain and perpetually enjoining them and each of them from in anywise interfering with complainant's manufacture, sale, and use of said device according to the terms of said contract.

FRANK A. HOOKER,
Circuit Judge.

Filed and entered Nov. 3rd, 1885.

[Endorsed:] 5–162. Circuit court for the county of Calhoun. In chancery. Nichols, Shepard & Co. *vs.* Elon A. Marsh *et al.* Decree. Filed Nov. 3rd, 1885. Leonidas H. Brockway, register in chancery.

400 2–175. 1060.

DEPARTMENT OF THE INTERIOR,
UNITED STATES PATENT OFFICE.

To all persons to whom these presents shall come, Greeting:

This is to certify that the annexed is a true copy from the records of this office of the letters patent granted Elon A. Marsh and Minard La Fever, December 28th, 1880, number 236,052, for improvement in steam-engine valve-gear.

In testimony whereof I, M. V. Montgomery, Commis-
[SEAL.] sioner of Patents, have caused the seal of the Patent Office to be affixed this 19th day of January, in the year of our Lord one thousand eight hundred and eighty-six, and of the Independence of the United States the one hundred and tenth.

M. V. MONTGOMERY,
Commissioner.

401 2–155.

No. 236,052.

THE UNITED STATES OF AMERICA.

To all to whom these presents shall come:

Whereas Elon A. Marsh, of Battle Creek, Michigan, has presented

the Commissioner of Patents a petition praying for the grant of letters patent for an alleged new and useful improvement in steam-engine valve gear, he having assigned one-half of his right, title, and interest in said improvement to Minard La Fever, of the same place, a description of which invention is contained in the specification, of which a copy is hereunto annexed and made a part hereof, and has complied with the various requirements of law in such case made and provided; and

Whereas, upon due examination made, the said claimant is adjudged to be justly entitled to a patent under the law:

Now, therefore, these letters patent are to grant unto the said Elon A. Marsh and Minard La Fever, their heirs or assigns, for the term of seventeen years from the twenty-eighth day of December, one thousand eight hundred and eighty, the exclusive right to make, use, and vend the said invention throughout the United States and the Territories thereof.

In testimony whereof I have hereunto set my hand and caused the seal of the Patent Office to be affixed, at the city
402 [SEAL.] of Washington, this twenty-eighth day of December, in the year of our Lord one thousand eight hundred and eighty, and of the Independence of the United States of America the one hundred and fifth.

A. BELL,
Acting Secretary of the Interior.

Countersigned.
E. M. MARBLE,
Commissioner of Patents.

(2129–5,000.)

404 UNITED STATES PATENT OFFICE.

ELON A. MARSH, of Battle Creek, Michigan, assignor of one-half to MINARD LA FEVER, of same place.

Steam-Engine Valve-Gear.

Specification forming part of Letters Patent No. 236,052, dated December 28, 1880; application filed May 3, 1880. (Model.)

To all whom it may concern:

Be it known that I, Elon A. Marsh, of Battle Creek, in the county of Calhoun and State of Michigan, have invented a new and useful improvement in steam-engine valve-gear, of which the following is a specification.

My invention relates to certain improvements in reversing-gear for steam-engines; and it consists in the combination, with the main shaft of the engine and the valve-rod, of two intermeshing gear-wheels of equal diameter, one mounted on the main shaft and the other upon a lever fulcrumed to the main shaft and connecting with the valve-rod by a wrist-pin in such manner that the last-mentioned wheel may be thrown to either side of a line on the plane of the

reciprocation of the valve and the center of the main driving-shaft, and thus change the motion of the valve and engine.

In the accompanying drawings—

(Here follows diagram marked p. 403.)

Figure 1 represents a side elevation of a portion of an engine, showing my improved reversing-gear; and Fig. 2, a detached view of the reversing-lever.

The letter A indicates the bed of the engine, B the pillow-block, and C the main driving-shaft, which may be of the ordinary description.

The letter D indicates a lever, having a bearing, *e*, by which it may be fulcrumed to the driving-shaft near one end, and a similar bearing, *f*, for the journal of the toothed gear-wheel G. The said wheel, when the parts are in place, intermeshes with a wheel, J, equal in diameter and similar in all respects to the wheel G, the said wheel J being rigidly secured to the driving-shaft C, so as to rotate with it and impart motion to the wheel G.

The letter *g* indicates a wrist-pin secured to the wheel G, to which one end of the valve-rod H is pivoted.

The free end of the lever D is provided with a handle, *d*, and a spring-pawl, L, which is adapted to engage the detents m' m^2 in the edge of a quadrant, P. The letter M indicates the fly-wheel of the engine, a portion being broken away to show the intermeshing gears.

The operation of my invention is as follows: When the parts are in the position with the lever on the line *a a* the wheel G will be above a horizontal line drawn through the center of the driving-shaft and the plane of reciprocation of the slide-valve, causing the valve to move in one direction. To reverse the engine, it is evident that it is only necessary to alter the position of the lever so as to bring it on the line *b b*, carrying the wheel below the plane of reciprocation of the valve and the center of the shaft C, and thus changing the motion of the valve.

Having thus fully described my invention, what I claim, and desire to secure by letters patent, is—

In combination with the main driving-shaft of an engine and the valve-rod thereof, the intergearing cog-wheels of equal diameter, one fixed on the driving-shaft and the other capable of a movement partially around the first mentioned, the latter having a wrist-pin, to which the valve-rod of the engine is connected, whereby said valve-rod is adapted to reciprocate the valve and operate the same to reverse the engine, substantially as specified.

ELON A. MARSH.

Witnesses:
E. R. SMITH.
W. G. MOREHOUSE.

(Model.

E. A. MARSH. 403

Steam Engine Valve Gear.

No. 236,052. Patented Dec. 28, 1880.

Fig. 1.

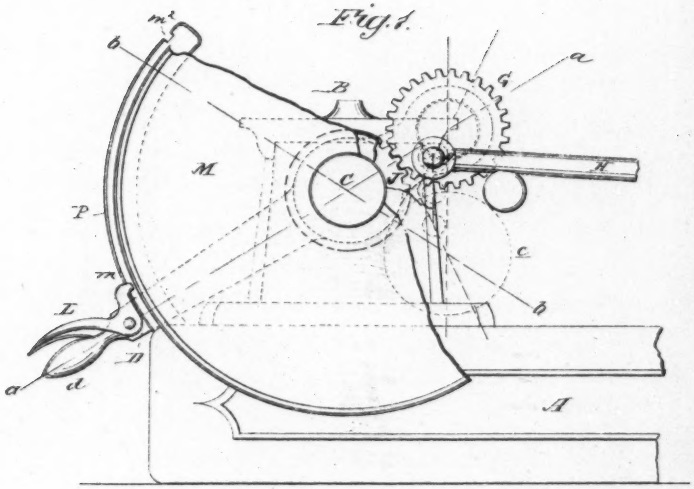

Fig. 2.

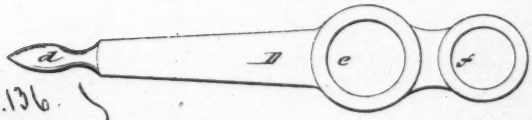

No. 136.
Marsh et al.
v.
Nichols et al.
p. 403

WITNESSES:
Francis McArdle.
C. Sedgwick

INVENTOR:
E. A. Marsh
BY Munn & Co
ATTORNEYS.

405 The Circuit Court for the County of Calhoun. In Chancery.

NICHOLS, SHEPARD & COMPANY
vs.
ELON A. MARSH and Others.

It is hereby stipulated that a certified copy of what purports to be letters patent 256,052, issued to Elon A. Marsh and Minard La Fever and dated Dec. 28, 1880, may be substituted among the exhibits and considered in evidence the same as the original on the hearing of the appeal in said cause.

Dated Feb. 2nd, 1886.

C. F. BURTON,
Sol'r for Complainant.
R. A. PARKER,
Sol'r for Def'ts.

406 [Endorsed:] 5. 5–162. Nichols, Shepard & Co., a corporation, *vs.* Elon A. Marsh *et al.* Stipulation and copy of letters patent. Filed Feb'y 3rd, 1886. Leonidas H. Brockway, register. Please annex and file with the exhibit.

407 Circuit Court for the County of Calhoun. In Chancery.

NICHOLS, SHEPARD & COMPANY, a Corporation, Compl't,
vs.
ELON A. MARSH, MINARD LAFEVER, & JAMES SCOTT, Defendants.

The said defendants, Elon A. Marsh and Minard La Fever, hereby claim the benefit of an appeal to the supreme court of the State of Michigan from the decree rendered in the said cause by said court on the third day of November, A. D. 1885.

R. A. PARKER,
Solicitor for said Defendants.

To the register of said court.
Dated this 19th day of January, A. D. 1886.

408 Circuit Court for the County of Calhoun. In Chancery.

NICHOLS, SHEPAKD & COMPANY, a Corporation, Compl't,
vs.
ELON A. MARSH, MINARD LAFEVER, & JAMES SCOTT, Defendants.

SIR: Take notice that the defendant- in the above cause *has* appealed to the supreme court of Michigan from the decree made therein on the third day of November, 1885, by the circuit court for the county of Calhourn, in chancery, and that a bond for costs and damages in said appeal, in a penalty of $250, with James Green and W. H. Sprague, of the city of Battle Creek, in said county of Calhoun, as sureties (copy annexed), has been duly filed, and that an application will be made on the 27 of January, 1886, to S. S. Hulbert, a circuit court commissioner, at his office, in the city of Battle

Creek, at 10 o'clock in the forenoon, for approval of such bond and the sureties proposed.

Dated Jan. —, 1886.

Yours, &c., R. A. PARKER,
Sol'r for Appellants, Elon A. Marsh and Minard Lafever.

To Charles T. Burton, Esq., sol'r for comp't.

Service of this notice of filing bond accepted Jan'y 18, 1886.

C. T. BURTON,
Att'y for Compl't.

409 Know all men by these presents that we, Elon A. Marsh and Minard La Fever, principals, and James Green and W. H. Sprague, sureties, are held and firmly bound unto Nichols, Shepard & Company in the sum of two hundred and fifty dollars, lawful money of the United States of America, to be paid to the said Nichols, Shepard & Company or to its certain attorneys or assigns; to which payment, well and truly to be made, we bind ourselves, our heirs, executors, and administrators, and each and every of them, firmly by these presents.

Sealed with our seals and dated the 16th day of January, 1886.

Whereas the above-named Elon A. Marsh and Minard La Fever have appealed to the supreme court of the State of Michigan from a decree of the circuit court for the county of Calhoun, in chancery, made on the third day of November, 1885, in a cause in said court in which Nichols, Shepard and Company was complainant and Elon A. Marsh, Minard La Fever, and James Scott were defendants:

Now, therefore, the conditions of this obligation *is* such that if the said appellant shall diligently prosecute the said appeal and shall perform and satisfy the decree or final order of the supreme court in said cause and shall pay all the costs of the appellee in the matter of said appeal as the supreme court shall award, then this obligation to be void; otherwise to remain in force.

MINARD LA FEVER. [L. S.]
E. A. MARSH. [L. S.]
JAMES GREEN. [L. S.]
W. H. SPRAGUE. [L. S.]

410 STATE OF MICHIGAN, } ss:
County of Calhoun, }

James Green and W. H. Sprague, being each duly sworn, says, each for himself, that he is worth the sum of two hundred and fifty dollars in property liable to levy and sale on execution over and above all his exemptions allowed by law.

JAMES GREEN.
W. H. SPRAGUE.

Subscribed and sworn to before me January 27, '86, at Battle Creek, Michigan.

STEVEN S. HULBERT,
Notary Public and Circuit Court Commissioner.

I hereby approve the within bond, its penalties, and its sureties. Battle Creek, Michigan, January 27th, 1886.

STEVEN S. HULBERT,
Circuit Court Commissioner, Calhoun County, Mich.

411 [Endorsed:] 5–162. (8570.) Nichols, Shepard and Co. *vs.* Elon A. Marsh *et al.* Claim of appeal and bond, with notice of appeal. Filed Feb'y 4th, 1886. Leonidas H. Brockway, register. Filed March 8, 1886. Chas. C. Hopkins, clerk supreme court.

412 *Decree Below Affirmed.*

At a session of the supreme court of the State of Michigan held at the supreme court room, in the city of Lansing, on the tenth day of June, in the year one thousand eight hundred and eighty-six.

Present: The Honorable James V. Campbell, chief justice; Thomas R. Sherwood, John W. Chaplin, Allen B. Morse, associate justices.

NICHOLS, SHEPARD AND CO., a Corporation, etc, Complainant,
vs.
ELON A. MARSH & MINARD LAFEVER, Defendants & Appellants,
and JAMES SCOTT, Defendant.

This cause having been brought to this court by appeal from the circuit — for the county of Calhoun, in chancery, and having been argued by counsel and due deliberation had thereon, it is now ordered, adjudged, and decreed by the court that the decree of the circuit court for the county of Calhoun, in chancery, be, and
413 the same is hereby, in all things affirmed; and it is further ordered, adjudged, and decreed that the complainant do recover of and from the defendants and appellants its costs, to be taxed.

STATE OF MICHIGAN, *ss:*

I, Charles C. Hopkins, clerk of the supreme court of the State of Michigan, do hereby certify that the foregoing is a true and correct copy of an order entered in said court in said cause; that I have compared the same with the original, and that it is a true transcript therefrom and the whole of said original order.

In testimony whereof I have hereunto set my hand and affixed the seal of said supreme court, at Lansing, this 26th day of June, in the year of our Lord one thousand eight hundred and eighty-six.

[L. S.] CHAS. C. HOPKINS, *Clerk.*

414 [Endorsed:] No. 5–162. State of Michigan, circuit court for the county of Calhoun. In chancery. Nichols, Shepard & Co., compl'ts, *vs.* Elon A. Marsh, Minard Lafever, & James Scott, def'ts. Order from supreme court affirming decree of circuit court. Filed June 28th, 1886. Leonidas H. Brockway, register & clerk.

415 At a session of the supreme court of the State of Michigan, held at the supreme court room, in the city of Lansing, on the

twenty-first day of July, in the year of our Lord one thousand eight hundred and eighty-six.

Present: The Honorable James V. Campbell, chief justice; Thomas B. Sherwood, John W. Champlin, Allen B. Morse, associate justices.

NICHOLS, SHEPARD & COMPANY, a Corporation, Complainant,
vs.
ELON A. MARSH & MINARD LAFEVER, Defendants and Appellants,
and JAMES SCOTT, Defendant.

This cause having been heretofore brought to this court by appeal from the circuit court for the county of Calhoun, in chancery, and the decree of the circuit court for the county of Calhoun, in chancery, having been heretofore affirmed, and a motion having been made for a rehearing, and this court having further considered the same, it is now here further ordered, adjudged, and decreed that such rehearing be denied, but that the decree be amended so that the defendants shall make, execute, and deliver to the said complainant, within forty days after the entry of this order in the circuit court for the county of Calhoun, a release releasing the said complainant, Nichols, Shepard and Company, from all claim, right, or demand on the part of them, the said Elon A. Marsh, Minard Lafever, and James Scott, by reason of the manufacture, use, or sale heretofore of the said invention relating to valve gear in the form and style as exhibited on the said engine described in the decree in this
416 cause, and also releasing the said Nichols, Shepard and Company from all claims, rights, or demands on behalf of them, the said Elon A. Marsh, Minard Lafever, and James Scott, arising from their making, using, or vending the said device hereafter. It is further ordered, adjudged, and decreed that this order be remitted to the circuit court for the county of Calhoun, in chancery, and be there made a decree of said cause in that court.

417 STATE OF MICHIGAN, *ss:*

I, Charles C. Hopkins, clerk of the supreme court of the State of Michigan, do hereby certify that the foregoing is a true and correct copy of an order entered in said court in said cause; that I have compared the same with the original, and that it is a true transcript therefrom and the whole of said original order.

In testimony whereof I have hereunto set my hand and affixed the seal of said supreme court, at Lansing, this 2nd day of August, in the year of our Lord one thousand eight hundred and eighty-six.

[SEAL.] CHAS. C. HOPKINS, *Clerk.*

418 [Endorsed:] 5–162. Filed Aug. 3rd, 1886. Louis C. Miller, deputy register.

419 In the Circuit Court for the County of Calhoun. In Chancery.

NICHOLS, SHEPARD & COMPANY
vs.
ELON A. MARSH, MINARD LAFEVER, & JAMES SCOTT.

Complainant's Taxed Bill of Costs.

Solicitor's fee by rule	$30 00
Clerk's fee	8 00
Reporter's fee on testimony taken in open court	38 24
Sheriff's fee for service of subpœna	3 30
Cost of taking deposition of James Scott	9 90
Cost of taking the depositions of Land and others at Richmond, Indiana	10 50
Cost of taking depositions of William E. Otter and others at Indianapolis, Ind.	10 50
Cost of taking depositions of Samuel Bradley and James B. Ellsworth at Detroit	11 00
Witness fees on hearing:	
E. C. Nichols, two days and twelve miles	3 20
E. M. Converse, two days and twelve miles	3 20
S. D. Whittaker, two days and twelve miles	3 20
James Scott, one day and twelve miles	2 30
Certified copy of records from the United States court, case No. 2753, Exhibit No. 18	11 75
420 Certified copy of case — United States court, case No. 2849, Exhibit No. 16	5 75
Certified copy from United States court of bill in case No. 2945, Exhibit No. 19	2 00
Contents of file wrapper in Marsh's application for patent, Exhibit No. 17	15 00
	$167 74

STATE OF MICHIGAN, } *ss:*
County of Wayne, }

CHARLES F. BURTON, being duly sworn, says that the foregoing items charged as disbursements have been actually paid for; that the complainant actually paid the sum of $9.90 on taking the deposition of James Scott; that the said deposition was filed in this cause for use at the hearing of this case, but that the said James Scott being at the time of the said hearing attainable as a witness the said deposition was not offered in evidence by complainant, but the oral testimony of the said James Scott was taken, and thereupon the solicitor for the defendants Marsh and Lafever offered the said deposition of the said James Scott in evidence, and the same was admitted in evidence; that the complainant paid for the depositions of Land and others in Richmond, Ind., the sum of $10.50, and for the depositions of William E. Otter and others at Indianapolis, Ind., the

sum of $10.50, and for the depositions of Samuel Bradley and James B. Ellsworth at Detroit the sum of $11.00; that all of said depositions were actually and necessarily used at the hearing of said cause, and the amount paid therefore
421 was reasonable in amount; that complainant also obtained and used at the hearing of this cause a certified copy from the records of case No. 2753 in the circuit court of the United States for the eastern district of Michigan, in equity, for which it paid the sum of $11.75; that it also obtained a certified copy of the records in case 2849 in the circuit court of the United States for the eastern district of Michigan, in equity, for which it paid the sum of $5.75; that it also obtained a certified copy of the record in case No. 2945 in the circuit court of the United States for the eastern district of Michigan, in equity, for which it paid the sum of $2.00; that it also obtained a certified copy of the contents of the file wrapper from the records of the Patent Office in the matter of the application of Elon A. Marsh for a patent for a reverse gear upon steam-engines, for which it paid the sum of $15.00; that all the said certified copies were deemed material and necessary and were actually and necessarily used at the hearing of this cause, and the amounts paid therefor were reasonable in amount.

Deponent further says that James Scott, one of the defendants, attended as a witness at the hearing of said cause at complainant's request and because he was a material and necessary witness on behalf of complainant in said cause, and he did not attend to assist in the management of the said cause on complainant's behalf.

Deponent further says that the other items charged as disbursements have actually been paid, especially the reporter's fee of $38.24, and that all said items were necessary and are reasonable in amount; that the witnesses above named were in good faith made to attend and were deemed material and necessary, and they respect-
422 ively travelled the number of miles and actually attended the number of days specified; that the depositions taken and mentioned were actually taken for use in said cause and were actually used therein.

And that the copies and exemplifications charged for were actually and necessarily used in said cause.

CHARLES F. BURTON.

Sworn to and subscribed to before me this 25th day of Aug., A. D. 1886.

J. H. A. S. CULLEN,
Notary Public, Wayne County, Michigan.

SIR: Take notice the foregoing is a true and correct copy of complainant's bill of costs in this cause and of the affidavit of disbursements required by rule. Application will be made to the clerk of said court, at his office, on the 31st day of August, 1886, at three o'clock in the afternoon, to tax the same.

CHARLES F. BURTON,
Solicitor for Complainant.

To Ralzemond A. Parker, solicitors for defendants Marsh and Lafever.

To Messrs. Brown and Thomas, solicitors for defendant Scott.

423 COUNTY OF CALHOUN, *ss:*

I hereby tax the foregoing bill of costs, exclusive of register's fees, at the sum of one hundred and fifty-seven & $\frac{14}{100}$ dollars.

LEONIDAS H. BROCKWAY,
Register in Chancery.

CALHOUN COUNTY, *ss:*

I hereby tax the costs of the register inch ancery in the foregoing-entitled cause at the sum of eight dollars.

GEORGE H. SOUTHWORTH,
Circuit Court Commissioner for said County.

424 [Endorsed:] (866; old No., 155c.) No. 5–162. The circuit court for the county of Calhoun. In chancery. Nichols, Shepard & Co., complainant, *vs.* Elon A. Marsh *et al.*, defendants. Bill of costs. Received and filed Sept. 2, 1886. Leonidas H. Brockway, register.

425 In the Circuit Court for the County of Calhoun. In Chancery.

At a session of said court held at the court-house, in Marshall, in said county, on the 13th day of Sept., 1886.

Present: Frank A. Hooker, circuit judge.

NICHOLS, SHEPARD & CO.
vs.
ELON A. MARSH, MINARD LAFEVER, & JAMES SCOTT.

This cause having been heretofore taken by appeal to the supreme court, and the decree heretofore rendered in this court having been affirmed and amended in the supreme court, and the cause having been remitted to this court with an order directing the said amendment be entered by this court as a decree of this court, it is now here, in pursuance of the said order of the supreme court, ordered, adjudged, and decreed that the said defendants make, execute, and deliver to the complainant, within forty days after the entry of this order, a release releasing the said complainant, Nichols, Shepard & Co., from all claim, right, or demand on the part of them, the said Elon A. Marsh, Minard Lafever, and James Scott, by reason of the manufacture, use, or sale heretofore of the said invention relating to valve gear in the form and style as exhibited on the said engine described in the decree in this cause, and also releasing the said Nichols, Shepard & Co. from all claims, rights, or demands on behalf of them, the said Elon A. Marsh, Minard Lafever, and James Scott, arising from their making, using, or vending the said device hereafter.

FRANK A. HOOKER,
Circuit Judge.

426 In the Circuit Court for the County of Calhoun. In Chancery.

NICHOLS, SHEPARD & CO.
vs.
ELON A. MARSH *et al.*

SIR: Please take notice that on Saturday, the 28th day of August, at 2 o'clock p. m., I shall apply to the Honorable Frank H. Hooker, judge of the said court, at Charlotte, Michigan, at his chambers, in the court-house, for an order and decree of which a copy is hereto attached and served.

CHARLES F. BURTON.

To Ralzemond A. Parker, Esq., sol'r for Marsh & Lafever.

427 STATE OF MICHIGAN, *County of Wayne,* } *ss:*

In the Circuit Court for the County of Calhoun. In Chancery.

NICHOLS, SHEPARD & CO.
vs.
ELON A. MARSH, MINARD LAFEVER, & JAMES SCOTT.

CHARLES F. BURTON, being duly sworn, deposes and says that on Monday, the 23rd day of August, 1886, he served on Ralzemond A. Parker, Esq., solicitor for defendant Marsh and Lafever a notice of which a true copy is hereto attached, attached to which notice was also a copy of the order proposed to be entered and taken in said cause.

On the same day deponent served on Messrs. Brown & Thomas, of Battle Creek, by depositing the same in the post office, with postage prepaid, a like notice and copy of order addressed to Messrs. Brown and Thomas, Battle Creek, Michigan.

CHARLES F. BURTON.

Subscribed and sworn to before me this 23rd day of August, 1886.
GEORGE H. LESHER,
Notary Public, Wayne Co., Mich.

428 [Endorsed:] 5–162. In the circuit court for the county of Calhoun. In chancery. Nichols, Shepard & Co. *vs.* Elon A. Marsh *et al.* Draft of decree and proof — service of notice for settlement of same. Filed Sept. 14, 1886. Louis C. Miller, deputy clerk. Charles F. Burton, solicitor for complainant.

429 STATE OF MICHIGAN:

In the Supreme Court.

NICHOLS, SHEPARD & CO.
vs.
ELON A. MARSH and Others.

This bill was filed to compel defendants to convey to complainants, who are a corporation engaged in engine-building at Battle Creek,

the right to use a certain improvement, consisting of a reversing apparatus, for which the defendants claim to own a patent and for the principal part of which it is admitted they are entitled to have one. In the summer of 1880 complainants were engaged in building engines intended for farm work, and self-propelling, and as the season of fairs was approaching they were preparing one to exhibit. Defendant Marsh, who is a skilled mechanic and has worked more or less for complainants, had devised what he regarded as a great improvement in reversing gear and was anxious to have it put to a practical test in such a way as to bring it before the public. He showed it to Mr. Nichols, the active man of the concern in that department, and desired to be allowed to fit it to the engine which was to be exhibited. Mr. Nichols thought favorably of the device and was willing to co-operate. The change required to adapt the engine to the new reversing made necessary some changes in the steam-chest and some other alterations. All this was done in the shop, partly by the shop hands, and when completed the engine was painted and put in order for the fairs. Marsh was sent with it, in company with complainants' agent, and was paid wages and expenses. The engine was exhibited at several places to a large number of people and shown at work, and consequently Marsh and his associates, the other defendants who became interested in him, received orders and made sales of the right to use the device to a considerable amount.

430 When the arrangement was made with complainants Marsh had applied for a patent, which was subsequently allowed by the Patent Office. The device as so patented in the outset did not contain certain arrangements found necessary for its perfect working, and these were added while work was going on to fit out the engine. There is a dispute whether these improvements were invented by Mr. Marsh or by Mr. Hoag, one of the complainants' workmen, who claims to have noticed the defect in the apparatus while working at it and to have devised the remedy. Hoag obtained a patent for it. Marsh afterwards applied for one, and in the conflict concerning the interference the Washington officials decided in his favor, and complainants, as Hoag's assignees, filed a bill in equity in the supreme court of the District of Columbia to have the matter judicially settled.

Complainants claim that when they allowed Marsh to adapt his device to their engine and furnished him aid in so doing in the shop and in the exhibition it was agreed that they should have the right to use it, without further compensation, on their own engines. This is the agreement in issue here. Defendants deny any such arrangement and claim that complainants have no right whatever to use it. Complainants began at once to fit out their engine with the device, and the testimony shows clearly that defendants were enabled to get their invention adopted by the representation that complainants had adopted it. In addition to denying the right of complainants, defendants also rely on the fact that they, subsequently to the allowance of the patent, filed a bill against complainants in the circuit court of the United States for the eastern district of Michi

gan, charging an infringement, and complainants set up
431 in defense the invalidity of the patent and put the invention in issue, but did not set up license. This suit was defeated on the ground that the patent had never been issued and signed and sealed by the proper officer. 15 Fed. Rep., 914. An appeal was taken by the defendants, and also by the complainants, to the United States Supreme Court, where it is now pending. The present suit was begun before that case was appealed. Subsequently another suit was brought in the same court, relying on a correction of the patent. That suit, being later than the present, cannot affect this proceeding, and need not be further considered.

The suit now before us, not being brought to determine any question arising under the patent laws, but merely to enforce a contract to transfer an inventor's right, is not one in which the courts of the United States have particular jurisdiction. All parties are citizens of Michigan. There is nothing, therefore, to prevent the maintenance of this suit, unless the two suits are so nearly identical that this creates a double vexation. Questions touching the legal validity of patented rights belong to the courts of the United States, and we do not propose to consider any such question.

The bill filed by the defendants was strictly a bill under the patent laws and nothing else. The only issues raised by complainants there were such issues. It is very questionable whether such a bill at the present could have been so framed as to stand as a proper cross-bill, as it rests on a claim which is not hostile to the patent. As an original bill it is not claimed that it could have been filed there between these parties. We do not think that complainants are estopped by that litigation. If defendants had not then
432 obtained a good patent complainants were not called on to put in any defense which admitted one, and they cannot be deprived of the right to vindicate in another suit such right as could not have been adequately enforced in that litigation.

Although defendant Marsh denies the arrangement set up by the complainants, the proof is very convincing to the contrary. The invention was not one which was known to be of much value, and an interest in it was sold very cheap to one of the codefendants. Complainants expended more, in proportion, for their limited right to use the device in their own shop than was paid for the interest entirely. It was of great value to Marsh to have his invention recognized and used by a firm of established reputation for good work, and he made important sales on the faith of complainant's adoption of it, which would have been a deceptive representation if they were not acting with his approval. It is positively sworn by witnesses, whom we believe, that Marsh admitted he made the arrangement charged, but regarded it as void, because not reduced to writing. We have not discovered any law which makes such a license void if unwritten; but in the present case the agreement was fully executed by the complainants, and they are entitled to rely upon it on that account, if otherwise defective. It was perfectly definite in its terms and entirely fair. There is no reason why they should lose the benefit of it. We think the case is one where relief should be given

in equity. While defendants hold the patent no one will feel safe in buying an engine with their device attached at the risk of a lawsuit. Their open and notorious denial of complainant's rights has a necessary — to prevent sales and discredit them.

433 Without a written license they can never have the means of rebutting these charges. Defendants, having shown a disposition to interfere with them, should be compelled to give them a written evidence of the right which they have bought and paid for.

The court below having so held, the decree — be affirmed.

JAMES V. CAMPBELL.
T. R. SHERWOOD.
A. B. MORSE.

Champlin, J., did not sit.

STATE OF MICHIGAN, *ss*:

IN THE SUPREME COURT CLERK'S OFFICE.

I, Charles C. Hopkins, clerk of the supreme court of the State of Michigan, do hereby certify that the annexed is a true and correct copy of the opinion of the court now on file in said court in said cause; that I have compared the same with the original, and that it is a true transcript therefrom and the whole of said original.

In testimony whereof I have hereunto set my hand and
[SEAL.] affixed the seal of said supreme court, at Lansing, this eighth day of February, A. D. 1887.

CHARLES C. HOPKINS, *Clerk*.

434 [Endorsed:] 5-162 to 360. Nichols, Shepard & Co. *vs.* Marsh *et al.* Opinion of the supreme court of Michigan. Filed Feb'y 16, 1887. Leonidas H. Brockway, register in chancery.

435 W. F. White, dealer in dry goods, hardware, boots, shoes, and agricultural implements; also dealer in grain.

BARRY, ILL., *July 15th*, 1879.

Mr. E. C. Nichols, Esq.:

Yours of the 12th inst. at hand and contents fully noted. I emphatically endorse your ideas of discretion and hope you will not feel any apprehensions on that score. Should you by any means learn of any inefficiency on my part you could — me no greater favor than to inform me at once. My aim is excellence and my watchword improvement. I hope to make myself useful to you and for my own part indispensable.

Yesterday I put in a full day; left Palmyra at a. m., arrived at Barry, and drove 14 miles to engine. *A* of the tools which I took from Barry was useless. I had to drive 8 miles farther to Hannibal, Mo. I a'ved back at engine at six o'clock p. m., fixed it, stayed till sundown, and returned to Barry at 11 o'clock at night. Engine works splendidly now, and Mr. White, who -mpanied me, feels very much gratified at the -ult. The engineer has spoiled
436 the bonnet by g- out the case to get more draught, but failing in this he has been running with the bonnet thrown

back, which was an improvement on draught, but quite dangerous. I also visited a 10-horse engine, No. 277, with separator. It ran very nicely and I could find no fault with it. Both of these separators have 3 part boxes on cylinder and heat badly, otherwise doing splendidly. On this eight horse which I fixed last I made the nozle $\frac{11}{16}$ of an inch instead of $\frac{3}{4}$, and it works better than the others.

Truly yours, E. A. MARSH.

[Endorsed:] Exhibit No. 1. June 22nd, 1885. G. Gatrell, official stenographer, Marshall, Mich.

437 Office of Best Bros., cash dealers in hardware, cutlery, stoves, tinware, standard farm machines, and implements. Established 1852.

PALMYRA, Mo., *July 12th*, 1879.

E. C. Nichols:

Your telegram and letter just rec'd. Mr. Case left for Paris, Ill., two hours ago. As stated in my letter of yesterday, the eight-horse engine at this place was defective in draft. We fixed it up temporarily, as our sources here were insufficient to make a permanent job of it. I expect you will send Best Bros. a nozzle of smaller size to replace it. My opinion of the spark-arrester I find is wrong, as the increased draft throws out larger quantities of sparks, and yesterday it set fire to a bundle of wheat. The engine which Collins sold set fire to the engineer's frock, which lay near the separator, and to-day there is a rumor in town that an N., S. & C. separator, used in connection with an N., S. & Co. engine, burned yesterday. The cause of the fire we do not know, but I fear that it caught from engine. Your hint or hints is acceptable, as I feared to mention a point or two which was very objectionable to me. The spark-arrester is a matter of great importance and I fear that its present defects are working great injury in this section. I believe I have a plan which would be entirely successful. If agreeable to you I will forward diagram of same.

438 Your opinion of the separators is correct, as they run very nicely and give entire satisfaction. Your inquiry regarding the long box I cannot answer now, as I know but little about the separator, but will learn its points as fast as I can. I would like to know what caused the separator to burn, and had it not been for your telegram would, in absence of correct information, go out and see (distance, 10 miles).

Mr. Case procured 50.00, fifty, dollars for me to-day from Best Bros. The cause of my being short of money is I used a part of what you gave me, and, although the necessity for doing so was painful to me, it was in accordance with my best judgment.

Obediently yours, E. A. MARSH.

[Endorsed:] Exhibit No. 2. June 22, 1885. G. Gatrell, official stenographer, Marshall, Mich.

(Model. 440

E. A. MARSH.

Steam Engine Valve Gear.

No. 236,052. Patented Dec. 28, 1880.

Fig. 1.

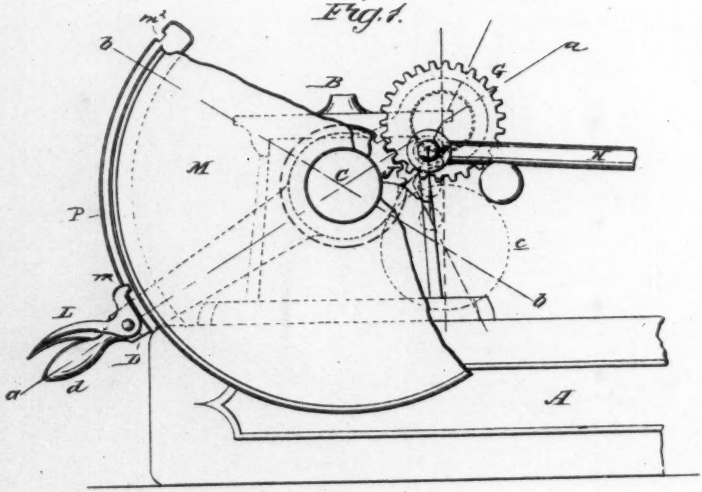

Fig. 2.

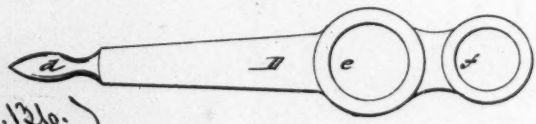

No. 136.
Marsh et al.
Nichols et al
p. 440

WITNESSES:
Francis McArdle.
C. Sedgwick

INVENTOR:
E. A. Marsh
BY Munn & Co
ATTORNEYS.

439 BATTLE CREEK, *Feb. 6th*, 1880.

E. C. Nichols.

DEAR SIR: Having spent much time in research and study of the various principals and devices for reversing steam-engines, I had failed to find any substitute for the link motion which would be both simple and practical. Recognizing a felt want for such a device, I have for the past four months given the subject more than usual thought. My efforts in this direction have been more successful than I had dared to hope. This invention is not a subterfuge, as many devices are which numerous manuf'rs use to accomplish similar results, but a new departure in that field; in fact, an invention of real merit. Simple and practical in the fullest sense, it obviates the necessity of an eccentric and may be reversed from the driver's seat while the engine is in full motion. I am about to place this invention on the market, and my object in describing it to you is to give you — to purchase it for your own use.

Resp., E. A. MARSH.

P. S.—References: Minard La Fever, Thurlow Case, Albert Roberts. Should you decide at once that you do not want anything of this kind please inform me to that effect.

E. A. M.

[Endorsed:] E. A. Marsh. Letter, Feb'y. Exhibit 3. June 22, 1885. G. Gatrell, official stenographer, Marshall, Mich.

441 UNITED STATES PATENT OFFICE.

ELON A. MARSH, of Battle Creek, Michigan, assignee of one-half to Minard La Fever, of same place.

Steam-Engine Valve-Gear.

Specification forming part of Letters Patent No. 236,052, dated December 28, 1880. Application filed May 3, 1880. (Model.)

To all whom it may concern:

Be it known that I, Elon A. Marsh, of Battle Creek, in the county of Calhoun and State of Michigan, have invented a new and useful improvement in steam-engine valve-gear, of which the following is a specification.

My invention relates to certain improvements in reversing-gear for steam-engines; and it consists in the combination, with the main shaft of the engine and the valve-rod, of two intermeshing gear-wheels of equal diameter, one mounted on the main shaft and the other upon a lever fulcrumed to the main shaft and connecting with the valve-rod by a wrist-pin in such manner that the last-mentioned wheel may be thrown to either side of a line on the plane of the reciprocation of the valve and the center of the main driving-shaft, and thus change the motion of the valve and engine.

In the accompanying drawings—

(Here follows diagram marked p. 440.)

Figure 1 represents a side elevation of a portion of an engine, showing my improved reversing-gear; and Fig. 2, a detached view of the reversing-lever.

The letter A indicates the bed of the engine, B the pillow-block, and C the main driving-shaft, which may be of the ordinary description.

The letter E indicates a lever, having a bearing, *e*, by which it may be fulcrumed to the driving-shaft near one end, and a similar bearing, *f*, for the journal of the toothed gear-wheel G. The said wheel, when the parts are in place, intermeshes with a wheel, J, equal in diameter and similar in all respects to the wheel G, the said wheel J being rigidly secured to the driving-shaft C, so as to rotate with it and impart motion to the wheel G.

The letter *g* indicates a wrist-pin secured to the wheel G, to which one end of the valve-rod H is pivoted.

The free end of the lever D is provided with a handle, *d*, and a spring-pawl, L, which is adapted to engage the detents m' m^2 in the edge of a quadrant, P. The letter M indicates the fly-wheel of the engine, a portion being broken away to show the intermeshing gear.

The operation of my invention is as follows: When the parts are in the position with the lever on the line *a a* the wheel G will be above a horizontal line drawn through the center of the driving-shaft and the plane of reciprocation of the slide-valve, causing the valve to move in one direction. To reverse the engine, it is evident that it is only necessary to alter the position of the lever so as to bring it on the line *b b*, carrying the wheel below the plane of reciprocation of the valve and the center of the shaft C, and thus changing the motion of the valve.

Having thus fully described my invention, what I claim, and desire to secure by letters patent, is—

In combination with the main driving-shaft of an engine and the valve-rod thereof, the intergearing cog-wheels of equal diameter, one fixed on the driving-shaft and the other capable of a movement partially around the first mentioned, the latter having a wrist-pin, to which the valve-rod of the engine is connected, whereby said valve-rod is adapted to reciprocate the valve and operate the same to reverse the engine, substantially as specified.

ELON A. MARSH.

Witnesses:
E. R. SMITH.
W. G. MOREHOUSE.

442

(No Model.) 2 Sheets—Sheet 2.

E. A. MARSH.

REVERSING GEAR FOR STEAM ENGINES.

No. 308,567. Patented Nov. 25, 1884.

Fig. 2.

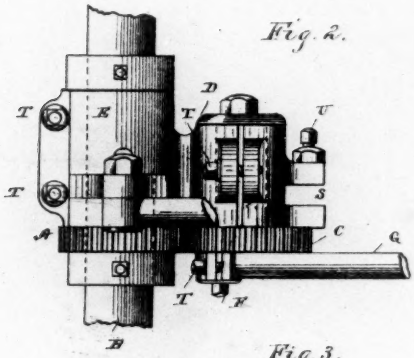

Fig. 3.

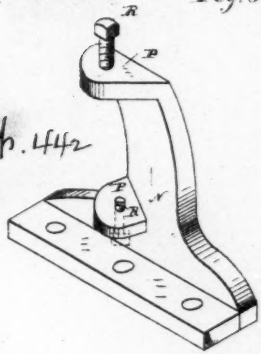

No. 1316.
Marsh et al.
v.
Nichols et al.
p. 442

Witnesses,
Edwin L. Yewell,
H. A. Toulmin

Inventor,
Elon A. Marsh,
By C. M. Alexander,
his Atty.

(No Model.) 2 Sheets—Sheet 1.

E. A. MARSH.

REVERSING GEAR FOR STEAM ENGINES.

No. 308,567. Patented Nov. 25, 1884.

No. 126.
Marsh et al
v.
Nichols et al.
} p. 445

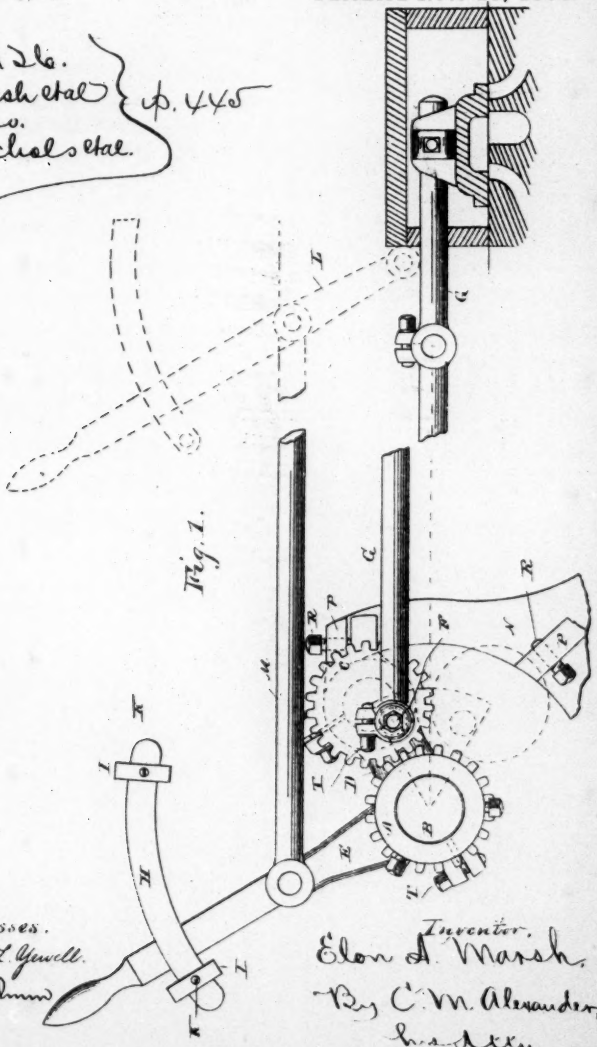

Fig. 1.

Witnesses.
Edwin L. Yewell.
H. A. Toulmin

Inventor.
Elon A. Marsh.
By C. M. Alexander,
his Atty.

443 UNITED STATES PATENT OFFICE.

ELON A. MARSH, of Battle Creek, Michigan.

Reversing-Gear for Steam-Engines.

Specification forming part of Letters Patent No. 308,567, dated November 25, 1884. Application filed September 28, 1881. (No model.)

To all whom it may concern:

Be it known that I, Elon A. Marsh, of Battle Creek, in the county of Calhoun, and in the State of Michigan, have invented certain new and useful improvements in reversing-gear for steam-engines; and I do hereby declare that the following is a full, clear, and exact description thereof, reference being had to the accompanying drawings, and to the letters of reference marked thereon, making a part of this specification.

This invention relates to certain improvements upon reversing-gear for steam-engines for which letters patent were granted to me December 28, 1880, No. 236,052; and it has for its objects to provide certain means for limiting the movement of the actuating-lever by means of adjustable stops, whereby the throw of the reversing-lever and the amount of lead to be given to the valve may be regulated with precision, as more fully hereinafter specified. These objects I attain by the apparatus and mechanism illustrated in the accompanying drawings, in which—

(Here follow diagrams marked pp. 442 & 445.)

Figure 1 represents a side elevation of my improved reversing-gear; Fig. 2, a top view of the gear with the valve and valve-chest omitted, and Fig. 3 a perspective view of a standard provided with the adjustable stops for limiting the movement of the reversing-lever.

The letter A indicates a cog-wheel mounted on the main shaft or driving-wheel shaft B of the engine, and C indicates a similar cog-wheel of equal diameter with the wheel A, mounted on a suitable journal on the arm D of the angle-lever E, by means of which the reversing gear is shifted. The two wheels intermesh, and the lever E is mounted on the driving-shaft, the said shaft forming a fulcrum, so that the lever may be partially turned thereon, so as to shift the wheel C. The said wheel C is provided with a wrist-pin, F, to which the valve-rod G is secured at one end.

The letter H indicates a segmental guide for the handle of the lever, which is provided with adjustable stops I, which are secured to it by means of set-screws K in any desired position to limit the movement of the lever as may be required.

In some instances it is found inconvenient to operate the lever directly, as above described, and in such cases an auxiliary lever, L, may be employed, as indicated by the dotted lines in Fig. 1, which

is connected to the lever E by means of a rod, M. In the last-mentioned case it is found preferable to arrange the adjustable stops on an independent standard, N, rigidly secured to the engine-bed, boiler, or other rigid support. The said stops in this instance are preferably formed by means of the stationary lugs P, having adjustable set-screws R, and the arm D of the lever E is slotted, as indicated by the letter S, so as to embrace the sides of the standard N and prevent lateral play of the lever. It will thus be perceived that the movement of the lever is limited laterally as well as in the direction of its oscillation, thus securing the utmost precision in the operation of the reversing-gear.

To compensate for the effects of wear, the bearings of the lever and the journal of the wheel C are divided on one side, and are held together by means of clamping-screws T, by means of which they may be tightened whenever they become loose.

One of the jaws of the slotted arm of the lever E is provided with a set-screw, U, by means of which the said arm may be adjusted to closely embrace the standard N and take up wear.

The operation of the reversing-gear in the present instance is substantially the same as that described in my former patent above mentioned; therefore it is not deemed necessary to more fully describe it in the present case.

Having thus described my invention, what I claim, and desire to secure by letters patent, is—

1. In a reversing-gear for steam-engines, the combination of a pivoted arm for carrying the reversing wheel, a valve-rod, a reach-rod operatively connected with the pivoted arm, a lever for actuating the pivoted arm through the reach-rod, and suitable stops, against one or the other of which the pivoted arm abuts when thrown from one position to the other, substantially as and for the purposes set forth.

444 2. In combination with the lever, the gear-wheels, and the valve rod, the segmental guide and adjustable stops, substantially as and for the purposes specified.

3. In combination with the lever carrying the reversing-wheel and slotted at its extremity, the standard, and adjustable stops, the whole arranged to operate together substantially as specified.

4. In a reversing-gear for steam-engines, the two gears of equal diameters, mounted one on the main engine-shaft and the other upon a lever adjustable around said shaft as a center, and carrying crank-wrist, to which the valve-rod is connected, in combination with stops limiting the throw of said lever.

In testimony whereof I affix my signature, in presence of two witnesses, this 6th day of September, 1881.

E. A. MARSH.

Witnesses:
A. H. BRIGGS.
D. C. SIMONS.

446 To Nichols, Shepard and Company, Battle Creek, Michigan:

Please take notice that letters of patent were issued on the 28th day of December, A. D. 1880, No. 236,052, to Elon A. Marsh and Minard Lafever, of Battle Creek, Michigan, by the United States for an improved steam-engine valve gear, and that you are notified not to manufacture or sell the same or any infringement thereof unless duly authorized by the said patentees or their grantees.

Respectfully, MARSH & LAFEVER,
By E. A. MARSH.

Dated at Battle Creek, February 11th, 1881.

Mr. E. C. Nichols.

DEAR SIR: I have to confess to a feeling of embarrassment in again intruding myself upon your notice, but as the season of activity in the engine business comes on I feel a restless desire to again engage in the (to me) congenial work.

Owing to the inharmonious feeling that existed between your father and myself last winter I had intended to seek employment outside of the city, but in addition to the ties which naturally bind me to this place I have the pleasant reminiscence of my engagement with you last season, which is not without its influence, and I believe that however vain my wish to again assist you may be there is at least no harm in seeking to do so. I would be pleased to receive an expression of your opinion in this matter.

Resp., E. A. MARSH.

Battle Creek, April 21st, 1880.

447 [Endorsed:] Notice to refrain from manufacturing patent. Exhibit 7. Jun- 22, 1885. G. Gatrell, official stenographer, Marshall, Mich. E. A. Marsh. Letter. April 21st, '80. Exhibit 4. June 22, 1885. G. Gatrell, official stenographer, Marshall, Mich.

448 *License with Royalty for Marsh & Lafever's Patent Valve Gear.*

This indenture witnesseth that we, the firm of Marsh & Lafever—said firm being composed of Elon A. Marsh and Minard Lafever—of the city of Battle Creek, county of Calhoun, and State of Michigan, parties of the first part, having been formed for the purpose of operating the invention secured by letters patent No. 236,052, dated December 28, 1880, on certain improvements in "steam-engine valve gear," of which letters patent the individual members of the said firm are owners, and the incorporated company of Nichols, Shepard & Co., of the city of Battle Creek, county of Calhoun, and State of Michigan, party of the second part, by and through their duly constituted and authorized representatives, have agreed together, at the said city of Battle Creek, on this — day of February, A. D. 1881, and do hereby agree to and with each other as follows, to wit:

The said firm of Marsh & Lafever, parties of the first part, for and in consideration of the promises and agreements hereinafter made

by the party of the second part, does hereby license and empower the said party of the second part to manufacture valve gears containing said patented improvements at its shops, in Battle Creek, Michigan, and in no other place or places until the end of the term for which said letters patent were granted, and to sell the same throughout the United States and the territories thereof.

And the said Nichols, Shepard & Co., party of the second part, for and in consideration of the promises and agreements hereinbefore made by the said parties of the first part, has promised and agreed, and does hereby promise and agree, to and with the said parties of the first part, both as a firm and as individuals, their heirs, successors, administrators, executors, and assigns, that it will use due diligence in manufacturing, advertising, introducing, and selling the said invention at its own cost and expense, and promptly account for and pay over to the said parties of the first part a royalty of seven dollars ($7.00) upon each and every steam-engine valve gear which it, the said party of the second part, shall manufacture or cause to be manufactured or is manufactured under or by its permission or direction, which sums shall be in full for all charges as royalty under this license, and which shall be paid at the times of settlement named below by the said party of the second part, or within thirty days thereafter, failing in which, all rights granted under this license may be declared forfeited; but such forfeiture shall not absolve the said party of the second part from its obligations hereunder.

And the said party of the second part further agrees to and with the said parties of the first part that it will make full and true written returns, under the oath of its president or other duly qualified officer, on the first days of January, April, July, and October of each year of all of said steam-engine valve gears manufactured by or for it during the quarter preceding, and if said parties of the first part or either of them shall not be satisfied in all respects with any of said returns, then they shall have the right, either by themselves, agents, or attorneys, to examine any and all the books, accounts, and papers of the said party of the second part containing any accounts, items, memoranda, or information whatever relating or pertaining to the manufacture or sale of said steam-engine valve gears, and upon request made by the said parties of the first part or either of them or their agents or attorneys the said party of the second part shall produce all books, accounts, and papers as aforesaid for examination and inspection.

The said party of the second part further expressly agrees to mark each of said steam-engine valve gears manufactured by it with the marks required by the present patent law of the United States or any law hereafter enacted concerning the marking of patented articles to preserve any of the rights of the patentee.

It is further agreed by the said parties of the first part that in case that said sworn statements are made as above required and are accompanied by the moneys due as royalties and promptly forwarded within the time specified, then a discount of two dollars from the above-specified royalty of seven dollars on each of said steam-engine

valve gears may be deducted from the amount remitted, but otherwise the whole amount shall be paid.

In witness whereof we have hereunto set our hands and seals, at the place and upon the date hereinbefore mentioned, to two copies of this agreement interchangeably.

——— ———. [L. S.]
——— ———. [L. S.]
——— ———. [L. S.]
——— ———. [L. S.]

Witnesses:

——— ———.
——— ———.

449 [Endorsed:] Form of license of Marsh's patent. Exhibit 8. Jun- 22, 1885. G. Gatrell, official stenographer, Marshall, Mich.

450 *Calendar No.*, 327.

48TH CONGRESS,
1ST SESSION. S. 671.

IN THE SENATE OF THE UNITED STATES.

December 13, 1883.

Mr. Conger asked and, by unanimous consent, obtained leave to bring in the following bill, which was read twice and referred to the Committee on Patents.

March 6, 1884.

Reported by Mr. Platt without amendment.

A bill for the relief of Elon A. Marsh and Minard Lafever.

Whereas, heretofore, to wit, on the twenty-eighth day of December, anno Domini eighteen hundred and eighty, in due form of procedure and in all legal respects, letters patent numbered two hundred and thirty-six thousand and fifty-two of the United States of America were duly granted and issued to Elon A. Marsh and his assignee, Minard Lafever, of Battle Creek, in the county of Calhoun and State of Michigan, one of the United States, for a new and useful improvement in steam-engine valve gear, save that the said letters patent were not, by accident or mistake, at the said time of issuing, to wit, on the twenty-eighth day of December, eighteen hundred and eighty, signed, as by law required, by the Secretary of the Interior; and

Whereas the said named letters patent were afterward, to wit, on the twenty-fourth day of February, anno Domini eighteen hundred and eighty-two, but not before, duly signed by the then acting Secretary of the Interior: Therefore

451 Be it enacted by the Senate and House of Representatives of the United States of America in Congress assembled, That

the said within-named letters patent of the United States of America, granted and issued as herein aforesaid, are hereby and by this act made legal, valid, operative, and complete, in law or in equity, for all and every purpose, legal or equitable, in all and every manner, without any or the least exception whatsoever in form or force or effect or intendment or purpose or protection and ownership, in the exclusive right to make, use, and vend the said invention from the said day and date of its original issue, to wit, the twenty-eighth day of December, anno Domini eighteen hundred and eighty, precisely and just in all respects and for all purposes the same as would have been the case and consequent operativeness of said named letters patent, in law or equity, from said last-named date above, for the full term thereafter by law provided, had the signature of the Secretary of the Interior been placed thereon on and at the day of the issue of the said letters patent, as prescribed by law, and had the omission or failure of the said signature thereon not occurred.

452 [Endorsed:] Calendar No., 327. 48th Congress, 1st session. S. 671. A bill for the relief of Elon A. Marsh and Minard Lafever. 1883, December 13. Read twice and referred to the Committee on Patents. 1884, March 6. Reported without amendment. Exhibit 9. Jun- 23, 1885. G. Gatrell, official stenographer, Marshall, Mich.

453 To whom it may concern:

I, James W. Miles, of Hubbardston, Ionia county, State of Michigan, do make the following statement: That about the year 1865 I was employed by the Louisville & Nashville R. R. in running a locomotive, and at the time saw a device placed on the switch engine, at Bowling Green, Ky., for the purpose of controlling and reversing the valve movement, which device was in all respects (to the best of my knowledge and belief) identical with the attachment known as the Marsh reverse for traction engines as I see it used on Nichols, Shepard & Co.'s traction engines. It consisted of a sleeve on the main shaft or axle, carrying a gear that meshed into another gear of the same size, with crank pin attached, the operation being that in partially revolving the sleeve on the shaft (the gear of which engaged with the gear carrying the wrist pin) the movement reversed the valve's motion.

The switch engine, with this double pinion reverse, was used in the yard at Bowling Green four or five months to my knowledge, and they were using it when I left the employ of the company.

(Signed) J. W. MILES.

Sworn and subscribed before me, a notary public in and for Calhoun county, Mich., this 20th day of April, 1881.

ALFRED A. ELSWORTH,
Notary Public.

[Endorsed:] Affidavit of J. W. Miles upon novelty of patent. Exhibit 10. Jun- 23d, 1885. G. Gartrell, official stenographer, Marshall, Mich.

454 APRIL 26TH, 1881.

I saw Mr. E. C. Nichols at his office and stated to him the object of my interview, which was to ascertain what N., S. & Co. intended to do in regard — the matter of difference between them and Messrs. Marsh, Lefever & Co. relative to Marsh's steam-engine valve gear. Nichols said that he did not know as they would do anything about it; that Marsh had no claim on the device; that he (Marsh) had stolen the whole thing; that he (Nichols) would not pay a d— cent for it; that he (Nichols) had done a good deal for Marsh—had sent him away to St. Louis to exhibit the device and had been to the expense of making it for Marsh, & paid Marsh's expenses while he (Marsh) was exhibiting the device—paid him about $100.00; that there had been an understanding that they (N., S. & Co. & Marsh) were to handle the device together, but that Marsh had gotten the big head, and no one could do anything with him.

Mr. E. C. Nichols exhibited several drawings of patents & explained their relative merits as he understood them. He contended that Marsh's device was not new, but that it was old; that Marsh had stole it; that he (Nichols) could bust up the patent & that he would do it; that he (Nichols) could produce a man who would swear that he made the same device in 1865, & that he then used it some three months on an engine used at a R. R. station; that he (Nichols) could place his hand on the very engine on which the device was used; that Marsh had used him (Nichols) shamefully; that he would make Marsh walk in sackcloth & ashes for his conduct; that they (Marsh, Lefever & Co.) would never get a cent out of the device; that he (Nichols) would pool with other manufacturers & fight them to the end; that he (Nichols) would give the parties having taken out licenses a written guaranty, for one dollar apiece, against any damages for use or manufacture of the device.

E. M. CONVERSE.

455 MAY 12, 1881.

Mr. E. C. Nichols called at my office and wished a private interview with me; his wish was granted. He stated that he had received numerous letters from parties who had taken out licenses for royalty on the Marsh gear. Those letters, he said, were inquiries as to what N., S. & Co. were doing in regard — the matter & whether they had taken out license or not. Nichols said he was somewhat embarrassed in the matter & that he hardly knew what to write those parties, as he had before written them that no arrangement had yet been made; in fact, he had been standing the other manufacturers off, so to speak. Nichols said he had got to answer those letters & he wanted to know what Marsh, La Fever & Co. were going to do in the matter before he wrote to them. He said that he would not write until he had seen M., L. & Co. or their attorney; that he would have nothing to regret in the matter hereafter. I asked him what proposition he had to make, if any, and he stated that, in substance, they (N., S. & Co.) were willing to give the patent their support—that is, sustain it—in case they (M., L. & Co.) would give N., S. & Co. a license. The support he proposed to give

to the patent was simply the influence of their company. Nichols did not say in so many words that he wanted M., L. & Co. to give N., S. & Co. a license, but that was the substance of his proposition. He said again that he would break down the patent; that he would pool with the other manufacturers, as he said he knew he could do, and fight the patent. He, Nichols, insisted that he had got sufficient information already to bust the patent and that he would do it. But he further said that he had no ill will toward M., L. & Co.; that he had rather they would make several thousand dollars & bring it in the city than not, but that N., S. & Co. would not
456 give a dollar for making the device. Nichols said he had rather see Garr, Scott & Co. & the other manufacturers pay for the device than not.

E. M. CONVERSE.

STATE OF MICHIGAN, } ss:
County of Calhoun, }

I, Louis C. Miller, register in chancery for said county, do hereby certify that the foregoing is a true and correct copy of Exhibit Number 11 in the case of Nichols, Shepard & Company, complainant, and Elon A. Marsh, Minard La Fever, and James Scott, defendants, now on file in my office.

Witness my hand & the seal of said court this 25th day of August, A. D. 1887.

[Seal of the Circuit Court of Calhoun Co., Michigan.]

LOUIS C. MILLER,
Register in Chancery.

[Endorsed:] Exhibit 11. Jun- 23d, 1885. G. Gatrell, official stenographer, Marshall, Mich.

457 Circuit Court for the County of Calhoun. In Chancery.

NICHOLS, SHEPARD & COMPANY
vs.
ELON A. MARSH, MINARD LE FEVER, and JAMES SCOTT.

It is hereby stipulated by and between the counsel for the respective parties, Nichols, Shepard & Company, complainant, and Elon A. Marsh and Minard Le Fever, defendants, that Exhibit Number Eleven may be withdrawn from the files of said cause, *they* being the two statements in pencil writing, having been made by Eugene Converse to said Marsh and Lefever, and copies may be substituted for the same to have the same effect as said originals.

Dated this 23rd day of August, 1887.

CHARLES F. BURTON,
Sol'r for Complainant.
R. A. PARKER,
Sol'r for Def'ts, Marsh & Le Fever.

[Endorsed:] 5-360. Circuit court for the county of Calhoun. In chancery. Nichols, Shepard & Co. *vs.* Elon A. Marsh, Minard La Fever. Stipulation as to Exhibit 11. Filed August 24, 1887. Louis C. Miller, register.

458 STATE OF ILLINOIS, *Cook County,* } *ss:*

In the Superior Court of said County. (Nov. 7, 1883.)

JAMES SCOTT *vs.* ELON A. MARSH and MINARD LE FEVER. } Gen. No., 88518. Term No., 1039.

The Bill of Complaint of James Scott, Complainant, against Elon A. Marsh and Minard Le Fever, Defendants.

To any of the judges of said court, in chancery sitting:

Humbly complaining, showeth unto your honor that heretofore, to wit, on or about the 5th day of March, 1881, your orator, James Scott, for and in consideration of the sale and transfer of a certain invention (purporting to be secured by letters patent issued out of and under the seal of the United States Patent Office, number 236,052) to your orator by the inventor, Elon A. Marsh, and the assignee of said letters patent, Minard Le Fever, the defendants named herein, your orator, among other lands, also conveyed to them, the said defendants, the following-described real estate, situate, lying, and being in the said Cook county and State of Illinois, to wit: 1 and 2 of subdivision block 4 of block 17 of canal trustees' subdivision of section 33, town. 39, R. 14 east, of the 3 P. M., by warranty deed bearing date on that day, of record on page 530 as document 939, reference whereto is hereby made; and your orator further says that although the consideration expressed in said conveyance is the sum of four thousand dollars, yet that the sole and actual consideration for said conveyance (and the conveyance of other lands aforesaid and the payment of cash and transfer of other property) was

459 the transfer and assignment to your orator of one undivided one-third interest in and to the invention as secured by said letters patent No. 236,052, hereinafter more fully described, and the exclusive right to said invention anywhere outside of the United States of America.

And your orator further shows unto your honor that after the conveyance aforesaid the said defendants, Elon A. Marsh, Minard Le Fever, and your orator, as joint owners of said letters patent, filed in the office — the clerk of the United States circuit court in and for the eastern district of Michigan their bill of complaint against the corporation known as Nichols, Shepard and Company, created by, organized under, and subsisting and doing business at Battle Creek, Calhoun county, in said State of Michigan, under the laws of the State of Michigan, defendants therein named, on the chancery side of said court, to recover damages for the infringement of said letters patent which were issued to said Elon A. Marsh aforesaid for an im-

provement in steam-engine valve gear, and that such proceedings have been had in said suit in said circuit court of the United States for the eastern district of Michigan that final decree has been entered therein against said Marsh *et. al.*, complainants, and in favor of said Nichols, Shepard and Co., defendants, dismissing said bill for want of equity, wherein and whereby the said letters patent No. 236,052 are declared to be absolutely null and void by the said court, Hon. Henry B. Brown, district judge, presiding, for the reason that, as the fact is, the said letters patent were not signed when issued by the Secretary of the Interior, as required by the act of Congress in such case made and provided (*vide* s. 4883 Revised Statutes of the United States), from which no appeal has been taken, so that said decision has become absolute and final, and your orator is
460 thus informed, and therefore alleges the fact to be that said letters patent No. 236,052 aforesaid were at the time when said conveyance was made absolutely null and void, so that the consideration for said conveyance has absolutely and wholly failed and said conveyance was in fact without consideration, and that your orator in prosecuting said suit in the United States circuit court has been put to great expense, to wit, in the sum of one thousand dollars.

And your orator further says that he is informed and believes and has good reason to believe that the said defendants are about to transfer and convey said lands to other parties so as to avoid the rescission and cancellation of the contract of exchange and the said conveyance aforesaid.

And your orator hereby offers to retransfer and reassign and set over unto the said defendants all interest, right, title, equity, claim, or demand which he acquired of, in, and to said invention elsewhere than in the United States, and all moneys, choses in action, or gains by him received of or by virtue of said invention, and to repay to them all taxes or assessments by them paid on said lands and to stand to and abide by whatever else may be required of him by this honorable court, so as to do equity in the premises and to place the said defendants *in statu quo* as at the date of said conveyance.

To the end, therefore, that your orator may have adequate relief in the premises, your orator prays that during the pendency of this suit the said defendants and each of them may be enjoined from selling or incumbering said lands in any way whatever, wherever situate, and that there may be an accounting between the parties hereto, your orator hereby offering to account and pay over unto the said defendants for all benefits, gains, and profits received by
461 virtue of said invention, &c., and that the defendants be required to bring in and exhibit all the receipts and vouchers showing the payment of taxes and expenses by reason of said real estate, and that your orator may be allowed for his expenses on said suit in the United States circuit court aforesaid, and that the said conveyance of date March 5th, 1881, be annulled, cancelled, rescinded, and set aside, and for such other and further relief in the premises as may be according to equity and good conscience.

And your orator further prays that your orator may have a writ of summons on filing this bill of complaint, pursuant to the statute in such case made and provided; and that the people's writ of injunction may issue enjoining and restraining the defendants, Elon A. Marsh and Minard Lefever, or either of them, their agents or attorneys, from selling or in any manner incumbering said lands, to wit, lots 1 and 2 of subdivision block 4 of block 17 of canal trustees' subdivision of section 33, T. 39, R. 14 east, 3rd P. M., until the further order of court; and your orator will ever pray, &c.

EDWARD J. HILL,
Sol. for James Scott, Complainant.

HENRY H. BROWN,
EDWARD J. HILL,
Of Counsel for Complainant.

STATE OF ILLINOIS, }
Cook County, } *ss:*

JAMES SCOTT, being duly sworn, on oath says that he is the complainant named in the above and foregoing bill of complaint; that he has heard read the same and knows the contents thereof, and that the same are true of his own knowledge except as to the matters therein stated on information and belief, and as to those matters he believes it to be true.

JAMES SCOTT.

Subscribed and sworn to before me this 26th day of September, A. D. 1883.

RICHARD W. HILL,
Notary Public, Cook Co., Ill.

462 On reading the foregoing bill it is ordered that the injunction issue in said cause, according to the prayer of said bill, on the complainant giving bond in the penal sum of $1,000, with surety to be approved by the clerk, conditioned according to the statute.

GEO. GARDNER, *Judge, &c.*

Bill received and approved by—
E. J. WHITEHEAD, *Master, &c.*

To Elon A. Marsh and Minard Lefever, Battle Creek, Michigan.

GENTLEMEN: Please take notice that this is a copy of a bill filed in the superior court of Cook county and State of Illinois, in chancery, and that you are summoned to answer said bill, etc., on the first Monday of November, A. D. 1883, or your default will be entered therein and a decree, according to the prayer thereof, entered against you.

Dated Chicago, Sept. 26th, 1883.

EDWARD J. HILL,
Sol. for Complainant.

463 [Endorsed:] Exhibit 14. June 23, 1885. G. Gatrell, official stenographer, Marshall, Mich.

[Endorsed:] Exhibit B. 88518. Term No., 1039. In the superior court, Cook county. James Scott *vs.* Elon A. Marsh and Minard Lafever. Original bill. Filed Sept. 26, 1883. Jno. J. Healey, clerk. E. J. Hill, sol'r for compl't. H. H. Brown, of counsel. (Copy.) Served Sept. 28.

464 STATE OF ILLINOIS, } ss:
Cook County, }

Gen. No., 88518.

In the Superior Court of Cook County. In Chancery.

JAMES SCOTT
v.
ELON A. MARSH and MINARD LAFEVER.

And now comes the complainant, by Edward J. Hill, his solicitor, and, by leave of court first had and obtained, amends his bill of complaint in the above-entitled cause by inserting therein immediately preceding the prayer thereof which begins with the words "to the end, therefore," etc., the following additional allegations—that is to say:

And your orator further shows unto your honors that your orator resides in the city of Battle Creek, county of Calhoun and State of Michigan, and has there resided for fifteen years and upward last past; that his age is 74 years; that by reason of his advanced age his judgment and mental perceptions are somewhat impaired, and that his associations through life have been mainly such that he has been habituated to place reliance in the apparently sincere assertions and representations of others; that some time in the fall of 1880 Elon A. Marsh, one of the defendants above named, with whom your orator had a slight previous acquaintance, came to the residence of this affiant, in said city of Battle Creek, and brought with him some drawings of an invention of which he claimed to be the inventor and which he designated as a steam-engine valve gear, and after spending some time in conversation explanatory of its workings requested that your orator purchase a one-half interest in the same, which to do your orator then and there refused for the reason that your orator was then and still is wholly unacquainted with the subject-matter and merits of such an invention and the use of steam machinery; and your orator further says that afterward the said

Dotage.

Child like simplicity.

Ignorance. Mad because he couldn't go and introduce it.

464½ Elon A. Marsh sold a one-half interest in said invention to the other defendant, Minard Lafever; and your orator further says that afterward and in the month of February, 1881, the said Elon A. Marsh came to the residence of your orator accompanied with the said Minard Lafever, whom the said Elon A. Marsh had previ-

Solicitations.

ously introduced to your orator, and the two defendants then told your orator that they had come to induce your orator to
Lie. purchase an interest in the said invention, and they together then and there stated in the presence and hearing of each other and of your orator—

First. That they, the two defendants, had *preserved* jointly letters patent for said invention from the United States Patent Office.

Second. That the success of said invention was
Opinion only. then fully assured because, as they then stated and represented, over 8,000 traction engines were being manufactured in the United States to which it was almost a necessity that the said invention should be applied.

Third. That they, the said defendants, had then contracts in writing with the following-named manufacturers or firms to pay them a royalty of five dollars each for every engine by the said manufacturers or firms respectively manufactured, and that they were manufacturing annually the number of engines set opposite their respective names, to wit: Gear, Scott & Co., Richmond, Ind., 300 engines; Eagle Machine Works, Indianapolis, Ind., 75 engines; C. & G. Cooper, Mount Vernon, Ohio, 250 engines; J. I. Case & Co., Racine, Wis., 100 engines; Russell & Co., Massillon, Ohio,
Opinion. 300, and that said manufacturers or firms together were then putting on an aggregate of forty of the said
465 steam valve gears—that is to say, of said invention—for each and every week, so that the royalty therefrom from said firms alone aggregated two hundred dollars per week to the owners of said invention.

Fourth. That Nichols, Shepard & Co., a corporation aforesaid, who were, as they said, manufacturing from two to three hundred traction engines per annum and constantly increasing the number,
Lie. had then agreed to take out a license from them, the said defendants, to use the said device at a royalty of five dollars for each engine by them, the said Nichols, Shepard & Co., manufactured; and your orator further says that your orator has recently learned that each, every, and all of said statements and representations were, as they, the said defendants, then well knew and
Lie. understood, false and untrue; and your orator further says that the said representations and statements were by the said defendants made to your orator as aforesaid to induce your orator to purchase an interest in said invention with the intention of cheating and defrauding your orator in the premises.

O, ho! And your orator further says that, believing the said representations and statements respectively and relying upon the same, your orator was induced to make a purchase of a one-third undivided interest in said invention for the United States purporting to be secured by said letters patent No. 236,052, and in consideration thereof transferred the said lots situate in Chicago as aforesaid and other property situate at the city of Battle Creek aforesaid, besides paying in cash the sum of two hundred dollars, and that the said defendants did thereupon transfer to your orator a

Don't say ⅓ in improvements thereon.

one-third interest in said invention purporting to be thus secured, and also the exclusive interest in said invention outside of the United States.

466 Aff. says 22nd day.

And your orator further says that on or about the 25th day of September, 1883, your orator for the first time learned that the said Elon A. Marsh had licensed the said corporation of Nichols, Shepard & Co. to use, make, vend, and sell said invention without liability therefor to him, the said inventor, or any other person interested in said invention.

Long before they, the said defendants, transferred said undivided interest therein, and upon such information and belief and by the admissions of the said Elon A. Marsh relative thereto which were on that day made, your orator alleges it to be the fact that at the time when the said defendant represented and held out to the complainant that the said Nichols, Shepard and Co. had agreed to take a license to use said invention and pay the owners of said supposed letters patent a royalty therefor the said Nichols, Shepard & Co. had already acquired from the said Elon A. Marsh a license and then possessed the right to use and to vend to others to be used the said invention without liability therefor to the inventor thereof or any other person or persons interested in said invention.

And your — further says that from the date of said purchase of said undivided one-third interest in said invention, well knowing and understanding all the facts relative thereto, the said Elon A. Marsh carefully and studiously concealed the fact of said license to Nichols, Shepard & Co. from your orator, and knowing that, as the fact was and is, *that* your orator relied to a great extent and principally upon the judgment of Nichols, Shepard & Co. and their responsibility as manufacturers in making said purchase; and your orator further says that since the date of said purchase the said Marsh and Lefever have had the entire management and control of all

467

the books, papers, vouchers, and business relating to said invention, and have carefully and studiously concealed the real facts relative thereto, and have falsified and spoliated the same, *of* your orator is credibly informed and verily believes, from your orator.

And your orator further says that your orator never, until about the time of filing the bill of complaint in this cause, learned of the real nature and scope of the said suit in the United States circuit court for the eastern district of Michigan, and then only from counsel learned in the law whom he had employed for that purpose.

Must mean Parker.

And your orator further says that at the time of said purchase of said undivided one-third interest of said invention by your orator no letters patent had in fact been issued or existed.

And your orator further says that the said defendants have not now and never had any letters patent for said invention from the United States.

Of no consequence whatever.

And your orator further says that the said invention was and still is of little or no value and has never been fully perfected.

468 [Endorsed:] 88518. Exhibit C. In the superior court of Cook county. James Scott *vs.* Elon A. Marsh and Minard Lafever. Copy. Amendments to the bill of complaint. E. J. Hill, sol'r for complainant. Filed Jan. 12, 1884.

[Endorsed:] Exhibit 15. June 23, 1885. G. Gatrell, official stenographer, Marshall, Mich.

469 *Bill.*

Circuit Court of the United States for the Eastern District of Michigan. In Equity.

To the honorable the judges of the United States circuit court for the eastern district of Michigan, in equity:

Your orators, Elon A. Marsh, Minard Lafever, and James Scott, citizens of the State and eastern district of Michigan and residing at Battle Creek, in that State, bring this their bill against Nichols, Shepard & Co., a corporation organized and doing business, *in* under the laws of the State of Michigan, in said district, at said city of Battle Creek; Edwin C. Nichols, secretary and treasurer; John Nichols, president, and David Shepard, vice-president, of said corporation, defendants herein, all of the same place.

And thereupon your orators complain and say:

I. That the said Elon A. Marsh was the original and first inventor of a certain new and useful improvement in steam-engine valve gear, and which had not been known or used before his said invention, and which was not, at the time of application for letters patent, as hereinafter mentioned, in public use or on sale with his consent or allowance.

II. That the said Elon A. Marsh, being as aforesaid the first inventor and discoverer of said improvement, and the said Minard Lafever, assignee of an undivided one-half interest therein from the said Elon A. Marsh, and being citizens of the United States, did, on the 28th day of December, A. D. 1880, upon due application therefor, obtain letters patent of the United States for said invention in due form of law, under the seal of the Patent Office of the United
470 States, signed by the Secretary of the Interior thereof and countersigned by the Commissioner of Patents, bearing the date and year last aforesaid, which letters patent were issued to the said Elon A. Marsh and Minard Lafever, as assignee aforesaid, and numbered 236,052, whereby there was granted and secured to the said Elon A. Marsh and Minard Lafever, their heirs, administrators, and assigns, for the term of seventeen years from and after the date thereof, the full and exclusive right and liberty of making, constructing, using, and vending to others to be used the said invention and improvements as set forth in said letters patent, which are now on record in the United States Patent Office, as by the said letters

patent or a certified copy of the same in court ready to be produced will more fully and at large appear, a copy of the specification and drawing being hereunto annexed, marked Exhibit A, by virtue whereof said Elon A. Marsh and Minard Lafever became the owners of all the rights and privileges granted and secured in and by said letters patent.

III. That the said Elon A. Marsh and Minard Lafever, being at that time the full and exclusive owners of said invention and letters patent, did, on or about the fifth day of March, A. D. 1881, by an instrument in writing, sell, grant, and assign to the said James Scott all their right, title, and interest in and to an undivided one-third interest of said letters patent, which said assignment was duly recorded in the Patent Office of the United States, at Washington, in Liber N 26 of Transfers of Patents, on page 193, and is to the — now here shown.

471 IV. That by virtue of the premises they became and are now the sole and exclusive owners of the said letters patent No. 236,052 and the inventions and improvements described therein and of all the rights and privileges granted and secured or intended to be granted and secured thereby; that since they obtained said patent and became the owners thereof as aforesaid they have invested considerable money and have been to great trouble in and about said invention in making the same profitable to themselves and useful to the public; that said invention has been and is of great benefit and advantage; that they have granted a large number of licenses for the manufacture, use, and sale of said invention, and that the public, with the single exception of the defendants, have acknowledged *in the* and acquiesced in the aforesaid rights of your orators, and your orators believe that they will realize and receive large gains and profits therefrom *in* infringements by said defendants and their confederates, agents, and representat*ions* can be prevented.

V. Yet the defendants, well knowing the premises and the rights secured to your orators aforesaid, but contriving to injure your orators and to deprive them of the benefits and advantages which might and otherwise would accrue unto them from said inventions after the issue of said letters patent No. 236,052 as aforesaid and before the commencement of this suit, did, as your orators are informed and believe, without the license or allowance and against the will of your orators and in violation of their rights and — infringe-

472 ment of the aforesaid letters patent, unlawfully and wrongfully and in defiance of the rights of your orators make, construct, use, and vend to others to be used steam-engine valve gears made in accordance with and employing and containing said invention or inventions, and that they still continue so to do, and are threatening to make and vend to others to be used large quantities of said steam-engine valve gears and to supply the market therewith.

VI. All in defiance of the rights acquired by and secured to your orators as aforesaid and to their great and irreparable loss and injury, by which they have been and still are being deprived of great gains and profits which they might and otherwise would have obtained,

but which have been received and enjoyed by defendants by and through their unlawful doings.

VII. And your orators further show unto your honors, on information and belief, that said defendants are threatening to sell and dispose of such machines and improvements to other persons, and your orators say that the use of said invention and the preparation for and the avowed determination to continue the same and to manufacture and sell said invention to other parties and the other aforesaid unlawful acts in disregard and defiance of your orators' rights have the effect to and do encourage and induce others to venture to infringe said patent, in disregard of your orators' rights.

VIII. They further show that they have caused notice to be given to said defendants of such infringements and of their rights to the premises and required them to desist and refrain therefrom, but they have disregarded such notice and refused to desist from said in-
473 fringements and still continue to make, use, and vend to others to be used said improved valve gear, in infringement of said letters patent No. 236,052, in violation of your orators' rights.

IX. And forasmuch as your orators can have no adequate relief except in this court, to the end, therefore, that the said defendants may, if they can, show why your orators should not have the relief hereby prayed your orators pray that the said defendant may be required, according to the utmost and best of their knowledge, remembrance, information, and belief, full, true, direct, and perfect answer make to the premises and to all the several matters hereinbefore stated, and especially whether they or either of them have made and *is* now making, using, — vending to others to be used the aforesaid described invention, and the extent thereof, and fully and particularly as if separately interrogated as to such and every of such matters, and may be compelled to account for and pay to your orators the profits by them acquired and the damages suffered by your orators from their unlawful acts.

To the end, therefore, that the said defendants may, if they can, show why your orators should not have the relief hereby prayed, and may full, true, direct, and perfect answer make, according to the best of its or their or their agents', clerks', or workmen's knowledge, remembrance, information, and belief, answer on oath being hereby expressly waived, to the several matters hereinbefore averred and set forth as fully and particularly as if the same were here repeated paragraph by paragraph and he and they thereto severally and specifically interrogated, and especially that said defendants answer and set forth—

474 First. Whether the said Elon A. Marsh was not, prior to the 28th day of December, 1880, the true, first, and original inventor or discoverer of the invention and discovery described in said letters patent 236,052 and every material part thereof; and, if not, who was or were the true, original, or first inventor or inventors of the same; and, if any other person or persons was or were the true, first, and original inventor or inventors of the same, where he or they reside and where and when he or they invented or discovered the same, and how the invention or discovery of such other

person or persons, if any, differed, if at all, from the said invention or discovery of said Elon A. Marsh.

Second. Whether the defendants have at any time, and, if so, when and where, made, sold, used, or caused to be made, sold, or used any steam-engine valve gears constructed and operated substantially as described in the specifications and drawings of said letters patent, or if the valve gears made, used, and sold by said defendants, if any there are, have differed from those described in said letters patent, in what particulars they differed therefrom or in what respect they were differently applied, combined, or operated from those described in said letters patent, if at all, and especially to state whether or not the valve gears on steam-engines, if any are now constructed by defendants, are constructed with two gear-wheels of equal diameter, one fixed on the main shaft and the other, to which the valve rod is attached, being capable of a movement partially around the first-mentioned wheel and thus adapted to operate the valve and to reverse the engine.

Third. Whether the valve gears now manufactured by the defendant or defendants for operating and reversing portable
475 steam-engines were and are not substantially similar to the valve gears described in "Exhibit A," annexed to and made a part of this bill of complaint; and, if not, how the same differs therefrom.

Fourth. Whether the defendant or defendants have not made large gains and profits from the use and sale of such valve gears; and, if so, for what time, to what extent and amount.

Fifth. Whether or not the said Elon A. Marsh and Minard Lafever assigned to said James Scott one-third interest in said letters patent, as alleged in the third paragraph of this bill.

And your orators pray that the said defendants, Nichols, Shepard & Co., John Nichols, David Shepard, and Edwin C. Nichols, its or their servants, agents, attorneys, and workmen, and each and every of them may be restrained and enjoined provisionally and perpetually by the order and injunction of this honorable court from directly or indirectly making, using, vending, working, or putting into practice, operation, or use, or in any way counterfeiting or imitating the said invention or any part thereof or any machinery made in accordance therewith, and that the said defendants may be decreed to pay the costs of this suit, and that your orators may have such other and further relief as may be agreeable to equity.

May it please your honors to grant unto your orators the writ of injunction, as well provisional as perpetual, issuing out of and under the seal of this court, commanding, enjoining, and restraining the said defendants, Nichols, Shepard and Co., John Nichols, David Shepard, and Edwin C. Nichols, and their agents, servants, attorneys, workmen, and each and every of them as is hereinbefore prayed in that behalf.

476 May it please your honors to grant unto your orators the writ of subpœna, issuing out of and under the seal of this court, directed to said defendants, Nichols, Shepard and Co., John Nichols, David Shepard, and Edwin C. Nichols, commanding them

by a certain day, under a certain penalty, to be and appear in this court, then and there to answer the premises and abide such order and decree as may be made against them.

And your orators will ever pray, &c.

ELON A. MARSH.
MINARD LAFEVER.
JAMES SCOTT.

JAMES SCOTT,
R. A. PARKER,
Sol'rs for Compl'ts and of Counsel.

The defendants are required to answer interrogatories numbered 1, 2, 3, 4, & 5.

R. A. PARKER,
Solicitor for Compl'ts and of Counsel.

477 STATE AND EASTERN DISTRICT OF MICHIGAN, *ss:*

On this 23rd day of April, A. D. 1883, before me personally appeared Elon A. Marsh, Minard Lafever, and James Scott, to me known to be the persons subscribing the foregoing bill of complaint, and made oath that they have read the same and know the contents thereof, and that the same is true of their own knowledge except as to those matters stated to be on information and belief, and as to those matters they believe it to be true.

MYRON H. JOY,
United States Commissioner for the Eastern District of Michigan.

"Exhibit A," attached to this bill, is drawing and specifications forming part of letters patent No. 236,052, dated Dec. 28, 1880.

Endorsed: 2849. Circuit court of the United States, eastern district of Michigan. In equity. Elon A. Marsh, Minard Lafever, and James Scott, compl'ts, *vs.* Nichols, Shepard and Co., Edwin C. Nichols, John Nichols, and David Shepard, def'ts. Bill for infringement of letters patent No. 236,052. Filed in clerk's office May 3rd, 1883. Walter S. Harsha, clerk. R. A. Parker, sol'r for compl't & of counsel.

478 *Plea of Nichols, Shepard & Co.*

Demurrer of other defendants.

In the Circuit Court of the United States for the Eastern District of Michigan. In Equity.

ELON A. MARSH, MINARD LAFEVER, JAMES SCOTT
vs.
NICHOLS, SHEPARD & CO., EDWIN C. NICHOLS, DAVID SHEPARD, JOHN NICHOLS.

The plea of Nichols, Shepard & Co., one of the above-named defendants, to the bill of complaint of the plaintiffs.

These defendants, by protestation, not confessing or acknowledg-

ing the matters and things in and by the said bill set forth and alleged to be true in such manner and form as the same are therein and thereby set forth and alleged, for plea to so much of the said bill as seeks to restrain said defendants provisionally and perpetually from directly or indirectly making, using, vending, working, or putting into practice, operation, or use, or in any way counterfeiting
479 the invention described in said bill or in any part thereof, say that in the year 1881, on or about the — day of June, the said complainants exhibited their bill of complaint in this honorable court against this said defendant, Nichols, Shepard & Co., thereby and therein stating, as they now in this present complaint state, that the said Elon A. Marsh was the original and first inventor of a certain new and useful improvement in steam-engine valve gear which had not been known or used before his said invention, and which was not at the time of his application thereinafter mentioned in public use or on sale with his consent or allowance.

2. That said Elon A. Marsh, being the first inventor and discoverer of said improvements, and the said Minard Lafever, assignee of an undivided one-half interest therein from the said Elon A. Marsh, and being citizens of the United States, did, on the 28th day of December, A. D. 1880, upon due application therefor, obtain letters patent of the United States for said invention, in due form of law, under the seal of the Patent Office of the United States, signed by the Secretary of the Interior thereof and countersigned by the Commissioner of Patents, bearing the date and year last aforesaid, which letters patent were issued to the said Elon A. Marsh and Minard Lafever, as assignees aforesaid, and numbered 236,052, whereby there was granted to the said Elon A. Marsh and Minard Lafever, their heirs, administrators, and assigns, for the term of seventeen years from and after the date thereof the full and exclusive right and liberty of making, constructing, using, and vending to others to be used the said invention and improvement as set
480 forth in said letters patent which were alleged to be of record in the United States Patent Office, a copy of the specifications and drawings of which were annexed to said complaint and marked Exhibit "A," and that said Elon A. Marsh and Minard Lafever became the owners of all the rights and privileges granted and secured in and by the said letters patent.

That said Elon A. Marsh and Minard Lafever on or about the fifth day of March, 1881, assigned to the said James Scott, by an instrument in writing, a one-third interest in said letters patent, which assignment was duly recorded in Liber "N" 26 of Transfers of Patents, on page 193.

4. That by virtue of the premises they became the owners of said patent and of all the rights and privileges granted and secured or intended to be granted and secured thereby; that they had granted a large number of licenses for the manufacture, use, and sale of said invention, and that the public, with the single exception of the defendant, had acknowledged and acquiesced in the rights of complainants.

5. That the defendant therein named, who was this defendant, Nichols, Shepard & Co., made a party defendant to this bill, knowing the premises, but contriving to injure the complainants and deprive them of the benefits and advantages which would otherwise accrue to them after the issue of said patent, No. 236,052, and before the commencement of said suit, without license or allowance and against the will of complainants and in violation of their rights, did make, use, and vend to others to be used steam-engine valve gears in accordance with and employing or containing said invention, and were threatening to make large quantities of said steam-engine valve gears and supply the market therewith.

And praying that the said defendant therein named might be restrained and enjoined provisionally and perpetually by the
481 order and injunction of this honorable court from directly or indirectly making, using, vending, working, or putting into practice, operation, or use, or in any way counterfeiting or imitating the said invention or any part thereof or any machinery made in accordance therewith, and for such other relief as might be agreeable to equity.

To which said bill the said defendant put in its answer denying that the said Elon A. Marsh was the first and original inventor of the steam-engine valve gear described in the said bill of complaint, and ignoring the issue of letters patent therefor as alleged in said bill.

That complainant replied to the said answer, and issue was duly joined according to the usual practice of this court.

That proofs were taken in said cause in accordance with the usual practice of this court, and thereafter, on the 11th day of February, 1883, the said cause came on for hearing before this court upon pleadings and proofs, and the court thereafter, having considered the evidence and the arguments of the counsel, entered a decree dismissing the said bill; that said decree is still of full force and validity, and has not been changed, modified, or appealed from; all of which matters and things these defendants do aver and plead in bar of so much of the said plaintiffs' bill, and hereinbefore particularly mentioned, and prays judgment of this honorable court whether they should make any further answer to so much of said bill as is hereinbefore pleaded to.

[SEAL.] NICHOLS & SHEPARD & CO.

The plea of the said defendant, Nichols, Shepard & Co., was
481½ taken this 29th day of June, in the year 1883, before me, under the common seal of the said corporation, as by their said seal affixed appears.

MYRON H. JOY,
Commissioner of the Circuit Court of the United States for the Eastern District of Michigan.

482 STATE AND EASTERN DISTRICT OF MICH., *ss:*

E. C. NICHOLS, being duly sworn, makes oath and says that the above seal affixed is the corporate seal of the said defendant, Nichols,

Shepard & Co., and that the same was affixed by him to said plea with full authority.

E. C. NICHOLS.

Subscribed and sworn to before me this 29th day of June, A. D. 1883.

MYRON H. JOY,
Commissioner of the Circuit Court of the United States for the Eastern District of Michigan.

STATE AND EASTERN DISTRICT OF MICHIGAN, *ss:*

EDWIN C. NICHOLS, being duly sworn, deposes and says that he is secretary of the said coporation, then Nichols, Shepard & Co.; that the foregoing plea is not interposed for delay, and that it is true in point of fact.

EDWIN C. NICHOLS.

Subscribed and sworn to before me this 29th day of June, 1883.

MYRON H. JOY,
Commissioner of the Circuit Court of the United States for the Eastern District of Michigan.

I certify that, in my opinion, the foregoing plea is well founded in point of law.

GEORGE HARDING, *Of Counsel.*

483 In the Circuit Court of the United States for the Eastern District of Michigan. In Equity.

ELON A. MAERSH, MINARD LAFEVER, JAMES SCOTT,
vs.
NICHOLS, SHEPARD & Co., EDWIN C. NICHOLS, DAVID SHEPARD, JOHN NICHOLS.

These defendants, Edwin C. Nichols, David Shepard, John Nichols, by protestation, not confessing or acknowledging all or any of the matters and things in said bill contained to be true in manner and form, as therein set forth and alleged, as to the discovery and relief sought by the said bill, do demur, and for cause of demurrer show the following reasons:

1. Because it does not appear that these said defendants are violating any rights of plaintiffs in their individual capacity.

2. Because the said bill is multifarious in that it seeks relief against separate and distinct individuals without showing that they are united or connected in any way.

3. Because it appears that the defendants are merely witnesses, who are fully qualified to testify at the demand of either party, and from them no discovery under oath is asked.

Because complainant by waiving answer under oath has
484 deprived defendants of the force of their answer as the same existed under the English chancery practice, and ought not

to have the benefit of categorical answers to the special interrogatories contained in their said bill without allowing them the full benfits of such answers according to such practice.

Wherefore these defendants demur to said bill and ask the judgment of this court whether they should be compelled to make any further or other answer to the said bill, and pray to be hence dismissed with costs.

CHARLES F. BURTON, *Sol'r for Def't.*

STATE AND EASTERN DISTRICT OF MICHIGAN:

E. C. NICHOLS, being duly sworn, deposes and says that the foregoing demurrer is not interposed for delay.

E. C. NICHOLS.

Subscribed and sworn to before me this 29th day of June, A. D. 1883.

MYRON H. JOY,
Commissioner of the Circuit Court of the United States for the Eastern District of Michigan.

I certify that in my opinion the foregoing demurrer is well founded in point of law.

GEORGE HARDING, *Of Counsel.*

485 *Discontinuance.*

Circuit Court of the United States for the Eastern District of Michigan. In Equity.

ELON A. MARSH, MINARD LAFEVER, and JAMES SCOTT, Compl'ts,
vs.
NICHOLS, SHEPARD & Co., a Corporation; DAVID SHEPARD, JOHN NICHOLS, & EDWIN C. NICHOLS, Def'ts.

The complainants applying to dismiss *his* bill in cause, on motion of R. A. Parker, solicitor for said complainants, it is ordered that leave to dismiss the same be granted accordingly on complainants paying to the defendants their costs in this suit, to be taxed. The register of said court will please enter the above in this cause.

R. A. PARKER,
Sol'r for Compl'ts.

April 8th, 1884.

Endorsed: 2849. U. S. circuit court, E. D. of Michigan. In equity. Elon A. Marsh *et al. vs.* Nichols, Shepard & Co. *et al.* Discontinuance. Filed in clerk's office April 12, 1884. Walter S. Harsha, clerk.

486 THE UNITED STATES OF AMERICA :

The Circuit Court of the United States for the Eastern District of Michigan.

I, Walter S. Harsha, clerk of the circuit court of the United States for the eastern district of Michigan, do hereby certify that the above and foregoing are true copies of the following papers filed and orders entered in the cause of Elon A. Marsh *et al. vs.* Nichols, Shepard and Co. *et al.*, No. 2849, in said court in equity, as the same appear of record and on file in my office, viz:

1. Bill of complaint.
2. Plea of Nichols, Shepard & Co., demurrer of other defendants.
3. Discontinuance.

That I have compared the same with the originals and they are true and correct transcripts therefrom and of the whole thereof, except as noted.

In testimony whereof I have hereunto set my hand and affixed the seal of the said court, at Detroit, in said district, this twelfth day of March, in the year one thousand eight hundred and eighty-five, and of the Independence of the United States of America the one hundred and ninth.

WALTER S. HARSHA, *Clerk.*

487 *Replication.*

26–1–48. 190.

Richmond, Backus & Co., stationers, Detroit, Mich.

The Circuit Court for the County of Calhoun. In Chancery.

NICHOLS, SHEPARD & Co.
vs.
ELON A. MARSH *et al.*, Defendants.

The replication of Nichols, Shepard & Co., complainant, to answer of James Scott, defendant.

This repliant, saving and reserving to himself now and at all times hereafter all and all manner of benefit and advantage of exception which may be taken to the manifold insufficiencies of the said answer, for replication thereunto, says that he will aver, maintain, and prove his bill of complaint to be true, certain, and sufficient in the law to be answered unto, and that the said answer of James Scott — uncertain, untrue, and insufficient to be replied to by this repliant; without this, that any other matter or thing whatever in the said answer contained material or effectual in the law to be replied unto and not herein and hereby well and sufficiently replied unto, confessed and avoided, traversed or denied, is true; all which matters and things this repliant is and will be ready to aver, main-

tain, and prove as this honorable court shall direct, and humbly prays as in and by his said bill he has already prayed.

CHARLES F. BURTON,
Solicitor for Complainant.

[Endorsed:] Exhibit 16. Jun- 23, 1885. G. Gatrell, official stenographer, Marshall, Mich.

488 Ex. 17.

Marsh's orig. appli., file wrapper, contents.

(2–175.)

DEPARTMENT OF THE INTERIOR,
UNITED STATES PATENT OFFICE.

To all persons to whom these presents shall come, Greeting:

This is to certify that the annexed is a true copy from the files of this office of the file wrapper, contents, and drawing in the matter of the letters patent granted Elon Marsh, assignor of one-half right to Minard Lafever, December 28, 1880, number 236,052, for improvement in steam-engine valve gear.

In testimony whereof I, E. M. Marble, Commissioner of Patents, have caused the seal of the Patent Office to be affixed this [L. S.] 25th day of March, in the year of our Lord one thousand eight hundred and eighty-two, and of the Independence of the United States the one hundred and sixth.

E. M. MARBLE,
Commissioner.

(8681–10,000.) Febr'y 10. '3. Walter S. Harsher.

489 E. R. B. $15 H.

Petition.

To the Commissioner of Patents of the United States of America:

The petition of Elon A. Marsh, of Battle Creek, in the county of Calhoun and State of Michigan, respectfully represents that your petitioner has invented a new and useful improvement in "steam-engine valve gear," which he verily believes has not been known or used prior to the invention thereof by your petitioner. He therefore prays that letters patent of the United States of America may be granted to him therefor vesting in him and his legal representatives the exclusive right to the same upon the terms and conditions expressed in the act of Congress in that case made and provided, he having paid fifteen dollars into the Treasury of the United States and otherwise complied with the requirements of said act; and he hereby authorizes O. D. Munn and A. E. Beach, of the firm of Munn & Co., of the cities of New York and Washington, or their accredited agents, to act as his attorneys in presenting the application and in making all such alterations and amendments as may be required to sign his name to the drawings.

ELON A. MARSH.

490 *Oath.*

STATE OF MICHIGAN, } ss:
County of Calhoun, }

On this nineteenth day of April, 1880, before the subscriber, a notary public in and for said county, personally appeared the above-named E. A. Marsh and made solemn oath that he verily believes himself to be the original and first inventor of the within-described improvement in "steam-engine valve gear," and that he does not know or believe the same was ever before known or used, and that he is a citizen of the United States, and that the same has not been patented to him nor with his knowledge or consent in any foreign country.

[L. S.] M. B. RUSSELL,
Notary Public, Calhoun County, Michigan.

491 Specification describing a new and useful improvement in steam-engine valve gear, invented by Elon A. Marsh, of Battle Creek, in the county of Calhoun and State of Michigan.

My invention consists in the combination with the main shaft and valve rod of a steam-engine of adjustable gearing connecting said shaft and said rod and means for operating the same, whereby provision is made for reversing the engine, as hereinafter particularly described.

Substitute "B," Oct. 25th, '80.

In the accompanying drawing figure 1 is a side view of a portion of an engine with my improvement applied thereto.

Figure 2 is a view of a [lever]* lever A for operdevice† ating the valve gear. Similar letters of reference indicate corresponding parts.

July 10, 1880.

A represents the engine bed, B the pillow block, and C the main shaft A of a steam-engine of any ordinary description.

D represents a lever provided with two bearings E F. The bearing E works on the main shaft C, at the point A usually occupied by the eccentric, and the bearing F receives a journal attached to a gear-wheel, G.

On the main shaft C is a gear-wheel, J, fixed to said shaft, and the gear-wheel G is arranged to engage with said wheel J. The gear-wheel G is provided with a wrist pin, *g*, to which is attached the outer end of the valve rod H.

492 The outer end of the lever D is provided with a handle, *d'*, and also with a spring latch, L, for engagement with two

* Words enclosed in brackets erased in copy.
† Change to lever.
Words and sentences enclosed between rules erased in copy.

notches M^1 M^2 in the edge of a quadrant plate, M, in order to hold it in place. When the parts are in the position shown in figure 1 a line drawn through the longitudinal center of the lever D coincides with the line *a a*. As the shaft C rotates motion is imparted by the gear-wheel J to the gear-wheel G and thence to the valve rod H, and thus the valve is operated. When it is desired to reverse the engine the latch L is disengaged from the notch M^1, and the lever D is raised until the latch engages with the notch M^2. This places the parts in such a position that a line drawn through the longitudinal center of the lever D coincides with the line *b b*, and the gear-wheel G occupies the position represented by the dotted circle *c*. During the passage of the wheel G from one position to the other the valve is arrested, and thus the engine is reversed.

Having thus fully described my invention, I claim as new and desire to secure by letters patent—

Substitute "A," July 10, '80.
Creutzbaur, Hatfield.

In reversing gear for steam-engines, the adjustable gear-wheel G, operating in connection with the fixed wheel J and the engine valve and provided with a suitable device for changing the angular position for the purpose set forth.

ELON A. MARSH.

Witnesses:
E. R. SMITH.
W. G. MOREHOUSE.

[Endorsed:] 8877. $\frac{4}{8}^3$. (Patent Office, U. S. A., May 3, 1880.)

493

Copied May 24, '80.

Room No. 38.

DEPARTMENT OF THE INTERIOR,
U. S. PATENT OFFICE,
WASHINGTON, D. C., *May* 24, 1880.

E. A. Marsh, Munn & Co., present.

Steam-eng. valve gear. 8877. May 3, 1880.

On page 3, line 1, of the specification the word "device" should be changed to "lever." The claim presented is anticipated by R. Creutzbaur, No. 161,486, Mar. 30, 1875, and R. F. Hatfield, No. 56045, July 3, 1866, "direct act'g eng."

F. FOWLER, *Ex.*

CHAS. C. ABBE.

[Endorsed:] 1. 8877. $\frac{4}{8}^3$. Rejection. May 24, 1880.

Words and sentences enclosed between rules erased in copy.

494 WASHINGTON, D. C., *July* 8, 1880.

Hon. Commissioner of Patents:

In the application for a patent on steam-engine valve gear, filed May 3, 1880, substitute "lever" for "device" on page 3, line 1, of the specification.

Also erase claim and substitute as follows:

"(1.) In steam-engine valve gears, the gear-wheel G, operating in connection with the fixed wheel J and the engine valve and provided with the lever D or equivalent device for changing the angular position of the movable wheel G, as and for the purpose specified.

A. Erased Oct. 25, '80.

(2.) In steam-engine valve gears, the combination with main shaft C, carrying gear-wheels G J, the former connected by the wrist pin *g* with valve rod H, of the lever D, having two bearings *e f* and a latch, L, working in either of two notches m^1 m^2 of plate M, as shown and described."

E. A. MARSH,
Per MUNN & CO., *Attorneys.*

[Endorsed:] 2. 8877. $\frac{4}{8}$. Amendment A. July 10, 1880. Cancelled Oct. 25, '80. 38. (Patent Office, U. S. A., Jul- 10, 1880.)

495 Copied July 14, '80.

Room No. 38.

DEPARTMENT OF THE INTERIOR,
U. S. PATENT OFFICE,
WASHINGTON, D. C., *July* 14, 1880.

E. A. Marsh, care of Munn & Co., present.

Steam-engine valve gear. 8877. May 3, 1880.

The claims presented are fully anticipated by English patent No. 2858, of 1858, Figs. 1 and 2.

F. FOWLER, *Ex.*

CHAS. C. ABBE.

[Endorsed:] 3. 8877. $\frac{4}{8}$. Rejection. July 14, 1880.

496 No. 8877. Room 38.

WASHINGTON, D. C., *July* 15, 1880.

Hon. Commissioner of Patents:

In the application for a patent on steam-engine valve filed May third, 1880, the new reference has been carefully considered, but does not meet the invention. The purpose is to work a cut-off valve,

Words and sentences enclosed between rules erased in copy.

not to reverse an engine, and the means for attaining these divers ends is signally different. His small wheel is in a swinging frame and rolls around the larger as the governor balls rise and fall, while my small wheel is fixed on a rotary shaft, which is the main shaft of the engine and works the large wheel that carries (by a wrist pin) the valve rod. The parts being combined in a different way and for a different purpose, the two devices are not interchangeable, and cannot, therefore, be considered equivalents. A favorable consideration is therefore respectfully requested.

E. A. MARSH,
Per MUNN & CO., *Attorneys.*

[Endorsed:] 4. 8877. $\frac{4}{8}$. 38. Letter to office, July 20, 1880. (Patent Office, U. S. A., Jul- 20, 1880.)

497 Copied July 21, '80.

Room No. 38.

DEPARTMENT OF THE INTERIOR,
U. S. PATENT OFFICE,
WASHINGTON, D. C., *July* 21, 1880.

E. A. Marsh, Munn & Co., present.

Steam-engine valve gear. 8877. May 3, 1880.

All of the elements contained in applicant's claims are found in the English reference No. 2858, of 1858, and the claims as presented are thought to be anticipated by the same.

F. FOWLER, *Ex.*

CHAS. C. ABBE.

[Endorsed:] 5. 8877. $\frac{4}{8}$. Rejection. July 21, 1880.

498 To the Commissioner of Patents:

The undersigned, having, on or about the 3rd of May, 1880, made application for letters patent for an improvement in steam-engine valve gear, hereby appoints Messrs. Alexander and Mason, of Washington, D. C., associated with Martin Metcalf, of Battle Creek, Michigan, his attorneys, with full power of substitution and revocation, to present said application, to make amendments therein, to receive the patent, and do all the business — U. S. Patent Office connected therewith.

Signed at Battle Creek, Michigan, this 12th day of October, 1880.

——— ———.

The undersigned, having, on or about the 3rd day of May, 1880, appointed Messrs. Munn & Co., of Washington, D. C., his attorneys to prosecute the application for a patent, referred to above, for steam-engine valve gear, hereby revokes the power of attorney there given.

Signed at Battle Creek, Michigan, this 12th day of October, 1880.

ELON A. MARSH.

[Endorsed:] 8877. $\frac{4}{8}^{3}$. Revocation and new power of attorney. Oct. 22, 1880. (United States Patent Office, Oct. 22, 1880.)

499 WASHINGTON, D. C., *Oct.* 22*d*, 1880.

Hon. Comm'r of Patents.

SIR: In the matter of the application of E. A. Marsh for improved reversing gear for steam-engines, filed May (23d,)* 1880, the specification is hereby amended by cancelling all except caption and signatures and substituting therefor the following:

*Not so.

B. Substitute "C," Nov. 13, '80.

My invention relates to certain improvements in reversing gear for steam-engines, and it consists in the combination with the main shaft and valve rod of the engine of two intermeshing gear-wheels of equal diameter—one mounted on the main shaft and the other upon a lever and connecting with the valve rod A to a longitudinal line drawn through the center of the main shaft and point of valve-rod attachment may be instantly changed and the point of attachment thrown to either side of the said line in order to reverse the motion of the engine, as more fully hereinafter specified.

by a wrist pin, whereby the *the* relative position of the valve rod

In the drawings figure 1 represents a side elevation of a portion of a steam-engine showing my invention, and

Figure 2 is a detached view of the lever by which the reversing gear is operated.

The letter A indicates the bed of the engine; B, the pillow block, and C, the main driving shaft, which may be of the ordinary description. The letter D indicates a lever fulcrumed at (F)* (*F*)† to the main shaft and provided with a bearing, E, in which is journalled a gear-wheel (G).‡ The letter J indicates a gear-wheel mounted on the (end) of the main shaft C and adapted to rotate with it. The gear-wheels G and J are of (equal diameter)§ and provided with an equal number of cog-teeth which intermesh with each other, so that both wheels make the same number of revolutions in a given time. The letter *g'* indicates a wrist pin secured to the face of the gear-wheel G, to which one end of the valve rod H is pivoted. The free end of the lever D is provided with a handle, *d'*, and a spring latch, I, which is adapted to engage the detents (N N' N'')* in the face of the quadrant M in order to hold the lever in position (as it is)† when A shifted. The letter P indicates the valve chamber of the valve cylinder and R the valve, which may be of the ordinary description, the valve being attached in any approved manner to the valve rod. The letter S indicates the driving crank of the engine and H' its crank pin.

* Not so
† Incorrect.
‡ Not so shown.
§ Not so shown.
500
* No such letter on diag.
† Erase & insert.
Not shown.

Words and sentences enclosed between rules erased in copy.

The operation of my invention is as follows:

When the parts are in the position indicated by the unbroken lines in figure 1 the main driving shaft will be rotated in the direction indicated by the arrow.

Not shown.

1. (To reverse the engine it is simply necessary)* to lower the lever to the position indicated (by the dotted lines),† when the motion of the valve will be instantly altered and the direction of rotation of the driving shaft changed, as indicated by the (arrow 4.)‡ It is evident that as the wheels are (equal in diameter)§ the wheel G will make but one rotation to one of the wheel J, shifting the valve properly at *the* each end of the stroke of the piston.

*As shown in unbroken lines, the lever is as low as it can ever be placed.

†In dotted lines.

‡ No arrow shown.

§ Not so.

Having thus fully described my invention, what I claim and desire to secure by letters patent is—

In combination with the main driving shaft of an engine and the valve rod thereof the intergearing cog-wheels (of equal diameter,)* one fixed on the driving shaft and the other capable of a movement partially around the first mentioned, the latter being provided with a wrist pin, to which the valve rod is connected, whereby said rod is adapted to reciprocate the (piston)* back and forth at each revolution of the main shaft (and to change the motion of the)† valve for reversing, substantially as specified.

* Not so shown.

501

* Valve.

† Motion not changed.

Respectfully, E. A. MARSH,
By ALEXANDER & MASON, *Att'ys.*

The above case is respectfully submitted for reconsideration, and attention is called to the fact that the English patent, the only case cited in answer, shows a movable cog-wheel half the diameter of the cog-wheel on the driving shaft, and making two revolutions to its one, which would preclude its action directly upon the valve rod and valve to properly reciprocate the valve, as it would reciprocate it twice at each revolution of the driving wheel, which would render the engine inoperative. Moreover, it is not seen how the mechanism of the reference could be employed to reverse the engine by acting directly on the valve rod, as in applicant's case. The specification has been rewritten and the claim amended, however, in view of the reference, and it is thought to so clearly show the distinction between the two cases and reference as to leave no question as to the novelty of applicant's invention.

Respectfully, E. A. MARSH,
By ALEXANDER & MASON, *Att'ys.*

[Endorsed:] 6. 8877. $\frac{4}{8}$. Amendment "B," Oct. 25, 1880. Cancelled Nov. 13th, 1880. 38. (United States Patent Office, Oct. 25, 1880.)

Words and sentences enclosed between rules erased in copy.

502 C. Nov. 4, '80.

Room No. 38.

DEPARTMENT OF THE INTERIOR,
UNITED STATES PATENT OFFICE,
WASHINGTON, D. C., *Nov.* 4, 1880.

E. A. Marsh, Alexander & Mason, present.

Steam-engine valve gear. 8877. May 3, 1880.

No examination upon the merits of the above case can be had until the same has been correctly presented.

F. FOWLER, *Ex.*

CHAS. C. ABBE.

C. Nov. 9, '80.

Room No. 38.

DEPARTMENT OF THE INTERIOR,
UNITED STATES PATENT OFFICE,
WASHINGTON, D. C., *Nov.* 9, 1880.

E. A. Marsh, Alexander & Mason, present.

Steam-engine valve gear. 88777. May 3, '80.

A model is thought to be necessary in the examination of the above application.

F. FOWLER, *Ex.*

CHAS. C. ABBE.

Room No. 38.

DEPARTMENT OF THE INTERIOR,
UNITED STATES PATENT OFFICE,
WASHINGTON, D. C., *Nov.* 9, 1888.

Application No. 8877. Inventor, E. A. Marsh. For steam-engine valve gear. Filed May 3, 1880.

I certify that a model is useful in the examination of this application.

F. FOWLER, *Examiner.*

CHAS. C. ABBE.

[Endorsed :] 7. 8877. $\frac{4}{8}^{3}$. Letter, Nov. 4, 1880. 8. 8877. $\frac{4}{8}^{3}$. Letter, Nov. 9, 1880.

503 WASHINGTON, D. C., *Nov.* 13*th*, 1880.

Hon. Comm'r of Patents.

SIR: In the matter of the application of E. A. Marsh for imp. in reversing gear for steam-engines, filed May 3d, 188–, the specification is hereby amended by cancelling all except signatures and caption and substituting therefor the following:

My invention relates to certain improvements in reversing gear for steam-engines; and it consists in the combination, with the main shaft of the engine and the valve rod, of two intermeshing gear-wheels of equal diameter, one mounted on the main shaft and the other upon a lever fulcrumed to the main shaft and connecting with the valve rod by a wrist pin in such manner that the last-mentioned wheel may be thrown to either side of a line on the plane of the reciprocation of the valve and the center of the main driving shaft, and thus change the motion of the valve and engine.

C.

In the accompanying drawing figure 1 represents a side elevation of a portion of an engine, showing my improved reversing gear, and figure two (2) a detached view of the reversing lever.

The letter A indicates the bed of the engine, B the pillow block, and C the main driving shaft, which may be of the ordinary description. The letter D indicates a lever having a bearing, *e*, by which it may be fulcrumed to the driving shaft near [at]* one end, and a similar bearing, *f*, for the journal of the toothed gear-wheel G. The said wheel, when the parts are in place, intermesh with a wheel, J, equal in diameter,† and similar in all respects to the wheel G, the said wheel J being rigidly secured to the driving shaft C, so as to rotate with it and impart motion to the wheel G. The letter *g* indicates a wrist pin secured to the wheel G, to which one end of the valve rod H is pivoted. The free end of the lever D is provided with a handle, *d*, and a spring pawl, L, which is adapted to engage the detents m' m^2 in the edge of a quadrant, P. The letter M indicates the fly-wheel of the engine, a portion being broken away to show the intermeshing gears.

Mar. 18, '80.

504

The operation of my invention is as follows:

When the parts are in the position with the lever on the line *a a* the wheel G will be above a horizontal line drawn through the center of the driving shaft and the plane of the reciprocation of the slide valve, causing the valve to move in one direction. To reverse the engine it is evident that it is only necessary to alter the position of the lever so as to bring it on the line *b b*, carrying the wheel below the plane of reciprocation of the valve and the center of the shaft C, and thus changing the motion of the valve.

Having thus fully described my invention, what I claim, and desire to secure by letters patent, is—

In combination with the main driving shaft of an engine and the valve rod thereof, the intergearing cog-wheels, of equal diameter, one fixed on the driving shaft and the other capable of a movement partially around the first mentioned, the latter having a wrist pin, to which the valve rod of the

* Words enclosed in brackets erased in copy.
† Not so shown.

engine is connected, whereby said valve rod is adapted to reciprocate the valve and operate the same to reverse the engine, substantially as specified.

E. A. MARSH,
By his att'ys, ALEXANDER & MASON.

[Endorsed:] 9. 8877. $\frac{4}{8}$. Amendment "C," Nov. 13, 1880. (Patent Office, U. S. A., Nov. 13, 1880.)

505 C. Nov. 15, '80.

Room No. 38.

DEPARTMENT OF THE INTERIOR,
UNITED STATES PATENT OFFICE,
WASHINGTON, D. C., *Nov.* 15, 1880.

E. A. Marsh, Alexander and Mason, present.

Steam-engine valve gear. May 3, 1880. 8877.

On page 2 the statement that the letter D is fulcrumed "at one end" is erroneous and should be corrected. The drawing should also be corrected to show the gear of equal diameters. Dotted lines will be sufficient to represent such.

F. FOWLER, *Ex.*

CHAS. C. ABBE.

[Endorsed:] 10. 8877. $\frac{4}{8}$. Letter, Nov. 15, 1880.

506 WASHINGTON, D. C., *Nov.* 18, '80.

Hon. Comm'r of Patents.

SIR: In the matter of the application of E. A. Marsh for improvements in steam-engine valve, filed May third, 1880, we hereby amend the same.

On page 12, line 14, erase the word "at" and insert *there* therefor the word "near."

E. A. MARSH,
By his att'ys, ALEXANDER & MASON.

[Endorsed:] 11. 8877. $\frac{4}{8}$. Amendment, Nov. 18, 1880. 38. (United States, U. S. A., Nov. 18th, 1880.)

507 2–024.

Issue division. Serial No. 8877.

All communications should be addressed to the Commissioner of Patents, Washington, D. C.

DEPARTMENT OF THE INTERIOR,
UNITED STATES PATENT OFFICE,
WASHINGTON, D. C., *Nov.* 22, 1880.

Elon A. Marsh, ass'or, care Alexander & Mason, asso. present.

SIR: Your application for a patent for an improvement in steam-engine valve gear, filed May 3, 1880, has been examined and allowed.

The final fee, twenty dollars, must be paid and the letters patent bear date as of a day not later than six months from the time of this present notice of allowance.

If the final fee is not paid within that period the patent will be withheld, and your only relief will be by a renewal of the application, with, additional fees, under the provisions of section 4897, Revised Statutes. The office aims to deliver patents upon the day of their date and on which their term begins to run; but to do this properly applicants will be expected to pay their final fees at least twenty days prior to the conclusion of the six months allowed them by law. The printing, photo-lithographing, and engrossing of the several patent parts, preparatory to final signing and sealing, will
508 consume the intervening time, and such work will not be done until after payment of the necessary fees.

When you send the final fee you will also send, distinctly and plainly written, the name of the inventor and title of invention as above given, date of allowance (which is the date of this circular), date of filing, and, if assigned, the names of the assignees.

If you desire to have the patent issued to assignees an assignment containing a request to that effect, together with the fee for recording the same, must be filed in this office on or before the date of payment of final fee.

Additional copies of specifications and drawings will be charged for at the following rates: Single copies uncertified, 25 cents; twenty copies or more, 10 cents each. The money should accompany the order.

Very respectfully,

E. M. MARBLE,
Commissioner of Patents.

Electro's (8762, 25,000).

[Written across the face in red ink:] ☞In remitting the final fee give the serial number at the head of this notice.

[Written on the margin in red ink:] The within title is that given by the examiner in charge as most appropriate to your invention. Should you desire a change in the same satisfactory reasons must be given therefor on or before the payment of the final fee.

[Erased in copy.]

509 *Memorandum of Fee Paid at the U. S. Patent Office.*

$20 H.

Serial No. 8877.
1880.

Inventor:
E. A. Marsh.
Patent to be issued to
Inventor and Minard Lefever.
Name of invention as allowed:
Steam-engine valve gear.
Date of payment:
Dec. 9, 1880.
Fee:
$20.00.
Solicitors:
Alexander & Mason.
Date of circular of allowance:
Nov. 22, 1880.
Send patent to
Marsh & Lafever,
Battle Creek, Mich.

510 8877. 1880. Slip. Fowler.

[Endorsed:] (Patent Office, U. S. A., Dec. 9th, 1880.)

No. 236,052 Div. 18. $4\frac{3}{8}$.

Elon A. Marsh,

Of Battle Creek,
County of Calhoun,
State of Michigan.

Ass'or of one-half his to Minard Lafever, of same place.

Steam-engine valve gear.
Rec'd May 3, 1880.
Petition, " " "

63
038

Affidavit, " " "
Specification, " " "
Drawing, " " "
Model rec'd Nov. 10, 1880.
Cert. dep., —.
1. Cash, $15, May 3, 1880.
Add'l fee cert., —.
1. " " cash, 20, Dec. 9, 1880.
2. Examined Nov. 19, '80. F. Fowler, Ex.
Issue Nov. 22, 1880. J. W. Babson.
4. Patented Dec. 28, 1880.

Circular, Nov. 22, 1880.
Martin Metcalf, Battle Creek, Mich.,
Alexander & Mason,
Asso's, present.

511 1880.

Contents.

Application papers.
1. Rej. May 24, 1880.
2. Amend't "A," July 10, '80.
3. Rej. July 14, 1880.
4. Letter to office, July 20, '80.
5. Rej. July 21, 1880.
6. Amend't "B," Oct. 25, '80.
7. Letter, Nov. 4, 1880.
8. Letter, Nov. 9, 1880.
9. Amend't "C," Nov. 13, 1880.
10. Letter, Nov. 15, 1880.
11. Amend't, Nov. 18, 1880.
12. Issued Nov. 19, 1880.
13.
14.
15.
16.
17.
18.

Title: Improvement in steam-engine valve gear.
Ex'd: E. A. M.; H. M. H.

513 UNITED STATES PATENT OFFICE.

ELON A. MARSH, of Battle Creek, Michigan, assignor of one-half to Minard La Fever, of same place.

Steam-Engine Valve-Gear.

Specification forming part of Letters Patent No. 236,052, dated December 28, 1880; application filed May 3, 1880. (Model.)

To all whom it may concern:

Be it known that I, Elon A. Marsh, of Battle Creek, in the county of Calhoun and State of Michigan, have invented a new and useful improvement in steam-engine valve-gear, of which the following is a specification.

My invention relates to certain improvements in reversing-gear for steam-engines; and it consists in the combination, with the main shaft of the engine and the valve-rod, of two intermeshing gear-wheels of equal diameter, one mounted on the main shaft and the other upon a lever fulcrumed to the main shaft and connecting with the valve-rod by a wrist-pin in such a manner that the last-mentioned wheel may be thrown to either side of a line on the plane of

the reciprocation of the valve and the center of the main driving-shaft, and thus change the motion of the valve and engine.

In the accompanying drawings—

(Here follows diagram marked p. 512.)

Figure 1 represents a side elevation of a portion of an engine, showing my improved reversing-gear; and Fig. 2, a detached view of the reversing-lever.

The letter A indicates the bed of the engine, B the pillow-block, and C the main driving-shaft, which may be of the ordinary description.

The letter D indicates a lever, having a bearing, *e*, by which it may be fulcrumed to the driving shaft near one end, and a similar bearing, *f*, for the journal of the toothed gear-wheel G. The said wheel, when the parts are in place, intermeshes with a wheel, J, equal in diameter and similar in all respects to the wheel G, the said wheel J being rigidly secured to the driving-shaft C, so as to rotate with it and impart motion to the wheel G.

The letter *g* indicates a wrist-pin secured to the wheel G, to which one end of the valve-rod H is pivoted.

The free end of the lever D is provided with a handle, *d*, and a spring-pawl, L, which is adapted to engage the detents m' m^2 in the edge of a quadrant, P. The letter M indicates the fly-wheel of the engine, a portion being broken away to show the intermeshing gear.

The operation of my invention is as follows: When the parts are in the position with the lever on the line *a a* the wheel G will be above a horizontal line drawn through the center of the driving-shaft and the plane of reciprocation of the slide-valve, causing the valve to move in one direction. To reverse the engine, it is evident that it is only necessary to alter the position of the lever so as to bring it on the line *b b*, carrying the wheel below the plane of reciprocation of the valve and the center of the shaft C, and thus changing the motion of the valve.

Having thus fully described my invention, what I claim, and desire to secure by letters patent, is—

In combination with the main driving-shaft of an engine and the valve-rod thereof, the intergearing cog-wheels of equal diameter, one fixed on the driving-shaft and the other capable of a movement partially around the first mentioned, the latter having a wrist-pin, to which the valve-rod of the engine is connected, whereby said valve-rod is adapted to reciprocate the valve and operate the same to reverse the engine, substantially as specified.

ELON A. MARSH.

Witnesses:
E. R. SMITH,
W. G. MOREHOUSE.

[Endorsed:] Exhibit 17. June 23, 1885. G. Gatrell, official stenographer, Marshall, Michigan.

(Model.

512

E. A. MARSH.

Steam Engine Valve Gear.

No. 236,052. Patented Dec. 28, 1880.

Fig. 1.

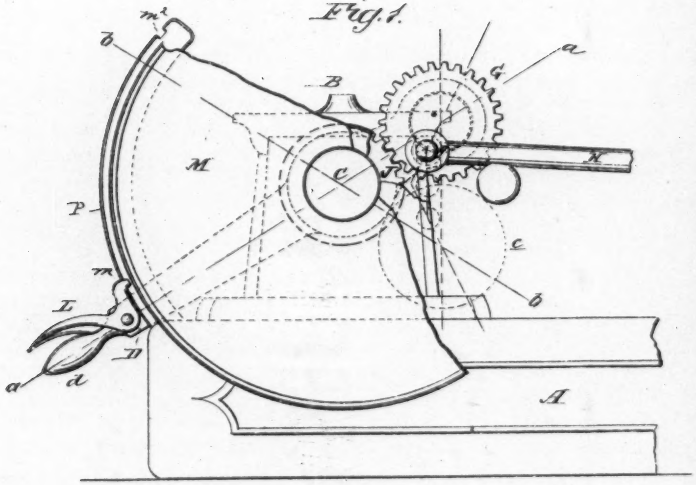

Fig. 2.

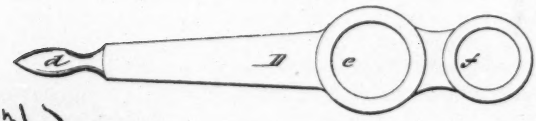

No. 136.
Marsh et al
v
Nichols et al.
p. 512

WITNESSES:
Francis McArdle.
C. Sedgwick

INVENTOR:
E. A. Marsh
BY Munn & Co
ATTORNEYS.

514 "EXHIBIT 18."

Bill of Complaint.

Circuit Court of the United States for the Eastern District of Michigan.
In Equity.

To the honorable the judges of the United States circuit court for the eastern district of Michigan, in equity:

Your orators, Elon A. Marsh, Minard Lafever, and James Scott, citizens of the State and eastern district of Michigan and residing at Battle Creek, in said State, bring this their bill of complaint against Nichols, Shepherd & Company, a corporation organized and doing business under the laws of the State of Michigan, in said district, at said city of Battle Creek.

And thereupon your orators complain and say:

515 1. That the said Elon A. Marsh was the original and first inventor of a certain new and useful improvement in steam-engine valve gear, and which had not been known or used before his said invention, and which was not at the time of the application for letters patent, as hereinafter mentioned in public use or on sale with his consent or allowance.

2. That the said Elon A. Marsh, being as aforesaid the first inventor and discoverer of said improvements, and the said Minard Lafever, assignee of an undivided one-half interest therein from said Elon A. Marsh, and being citizens of the United States, did, on the 28th day of December, A. D. 1880, upon due application therefor, obtain letters patent of the United States for said invention, in due form of law, under the seal of the Patent Office of the United States, signed by the Secretary of the Interior thereof and countersigned by the Commissioner of Patents, bearing date and year last aforesaid, which letters patent were issued to the said Elon A. Marsh and Minard Lafever, as assignee aforesaid, and numbered 236,052, whereby there was granted and secured to the said Elon A. Marsh and Minard Lafever, their heirs, administrators, and assigns, for the term of seventeen years from and after the date thereof, the full and exclusive right and liberty of making, constructing, using, and vending to others to be used the said invention and improvement as set forth in said letters patent, which are now on record in the United States Patent Office, as by the said letters patent or a certified copy of the same, in court ready to be produced, will more fully and at large appear, a copy of the specification and drawing whereof being hereunto annexed, marked Exhibit "A," by virtue whereof Elon A. Marsh and Minard Lafever became the owners of all the rights and privileges granted and secured in and by said letters patent.

3. That the said Elon A. Marsh and Minard Lafever, being
516 at that time the full and exclusive owners of said invention and letters patent, did, on or about the 5th day of March, A. D. 1881, by an instrument in writing, sell, grant, and assign to the

said James Scott all their right, title, and interest in and to an undivided one-third interest of said letters patent, which said assignment was duly recorded in the Patent Office of the United States, at Washington, in Liber N 26 of Transfers of Patents, on page 193, and is to the court now here shown.

4. That by virtue of the premises your orators became and are now the sole and exclusive owners of the said letters patent No. 236,052 and the inventions and improvements described therein, and of all the rights and privileges granted and secured or intended to be granted and secured thereby; that since they obtained said patent and became the owners thereof, as aforesaid, they have invested considerable sums of money, and have been to great trouble in and about said invention in making the same profitable to themselves and useful to the public; that said invention has been and is of great benefit and advantage; that they have granted a large number of licenses for the manufacture, use, and sale of said invention, and that the public, with the single exception of the defendant, have acknowledged and acquiesced in the aforesaid rights of your orators, and your orators believe that they will realize and receive large gains and profits therefrom if infringements by said defendant and its confederates, agents, and representatives can be prevented.

5. Yet the defendant, well knowing the premises and the rights secured to your orators aforesaid, but contriving to injure your orators and to deprive them of the benefits and advantages which might and otherwise would accrue unto them from said inventions, after the issue of said letters patent No. 236,052, as aforesaid, and before the commencement of this suit, did, as your orators are informed and believe, without the license or allowance and against the will of your orators, and in violation of their rights and —
517 infringement of the aforesaid letters patent, unlawfully and wrongfully and in defiance of the rights of your orators, make, construct, use, and vend to others to be used steam-engine valve gears made in accordance with and employing and containing said invention or inventions, and that they still continue so to do, and are threatening to make and vend to others to be used large quantities of said steam-engine valve gears and to supply the market therewith.

6. All in defiance of the rights acquired by and secured to your orators, as aforesaid, and to their great and irreparable loss and injury, by which they have been and still are being deprived of great gains and profits which they might and otherwise would have obtained, but which have been received and enjoyed and are being received and enjoyed by defendant by and through its unlawful doings.

7. And your orators further show unto your honors, on information and belief, that said defendants are threatening to sell and dispose of such machines and improvements to other persons, and your orators say that the use of said invention and the preparation for and avowed determination to continue the same and to manufacture and sell said invention to other parties, and the other aforesaid unlawful acts in disregard and defiance of your orators' rights, have

the effect to and do encourage and induce others to venture to infringe said patent in disregard of your orators' rights.

8. They further show that they have caused notice to be given to said defendant of such infringements and of their rights in the premises, and requested it to desist and refrain therefrom, but it has diregarded such notice and refused to desist from said infringements and still continues to make, use, and vend to others to be used said improved valve gear in infringement of said letters patent No. 236,052, in violation of your orators' rights.

9. And forasmuch as your orators can have no adequate
518 relief except in this court, to the end, therefore, that the said defendant may, if it can, show why your orators should not have the relief hereby prayed, your orators pray that the said defendant may be required, according to the utmost and best of its knowledge, remembrance, information, and belief, full, true, direct, and perfect answers make to the premises and to all the several matters hereinbefore stated, and especially whether it has made and is making, using, and vending to others to be used all the aforesaid-described invention and the extent thereof as fully and particularly as if separately interrogated as to such and every of such matters, and may be compelled to account for and pay to your orators the profits by them acquired and the damages suffered by your orators from its unlawful acts.

10. And your orators pray that the said defendant, Nichols, Shepherd & Co., its servants, agents, attorneys, and workmen and each and every of them, may be restrained and enjoined, provisionally and perpetually, by the order and injunction of this honorable court from directly or indirectly making, using, vending, working, or putting into practice, operation, and use or in anywise counterfeiting or imitating the said invention or any part thereof or any machinery made in accordance therewith, and that the said defendant may be decreed to pay the costs of this suit, and that your orators may have such other and further relief as may be agreeable to equity.

May it please your honors to grant unto your orators the writ of injunction, as well provisional as perpetual, issuing out of and under the seal of this court, commanding, enjoining, and restraining the said defendant, Nichols, Shepherd & Company, and its agents, servants, attorneys, workmen, and each and every of them, as is hereinbefore prayed in that behalf.

May it please your honors to grant unto your orators the writ
519 of subpœna, issuing out of and under the seal of this court, directed to said defendant, Nichols, Shepherd & Company, commanding it by a certain day, under a certain penalty, to be and appear in this court, then and there to answer the premises and abide such order and decree as may be made against them.

And your orators will ever pray, etc.

ELON A. MARSH.
MINARD LEFEVER.
JAMES SCOTT.

R. A. PARKER,
Solicitor for Complainants and of Counsel.

STATE AND EASTERN DISTRICT OF MICHIGAN, *ss:*

On this 8th day of June, A. D. 1881, before me personally appeared Elon A. Marsh, Minard Lefever, and James Scott, to me known to be the persons subscribing the foregoing bill of complaint, and made oath that they have read the same and know the contents thereof, and that the same is true of their own knowledge except as to those matters stated to be on information and belief, and as to those matters they believe it to be true.

MYRON H JOY,
United States Commissioner for the Eastern District of Michigan.

"Exhibit A" attached to this bill consists of the Patent Office drawing and specification of letters patent No. 236,052.
Dated Dec. 28, 1880.

Endorsed: 2753. United States circuit court, eastern dist. of Mich. In equity. Elon A. Marsh *et al. vs.* Nichols, Shepard & Co., a corporation. Bill for infringement of patent. Filed in clerk's office June 9, 1881. A. Mandell, clerk. R. A. Parker, compl'ts' sol'r & of counsel.

520 *Answer.*

In the Circuit Court of the United States for the Eastern District of Michigan. In Equity.

ELON A. MARSH, MINARD LEFEVER, and JAMES SCOTT, Complainants,
vs.
NICHOLS, SHEPHERD & Co., Defendant.

The answer of the above-named defendant, Nichols, Shepherd & Company, to the complaint of the above-named complainants, shows:

First. This defendant denies that the said Elon A. Marsh was the original and first inventor of a new and useful improvement in steam-engine valve gear, as described in the letters patent mentioned and described in said complaint.

Second. This defendant knows nothing, except as it has been informed by said complaint or by hearsay, of the issuing of letters patent to said Elon A. Marsh and Minard Lefever, and therefore neither admits nor denies the allegation contained in paragraph second of said bill, but leaves complainants to such proof thereof as they may deem advisable.

Third. This defendant knows nothing of the transfer of any rights by complainants Marsh and Lefever to complainant Scott.

Fourth. Defendant denies that complainants because of said letters patent have acquired any exclusive right to manufacture, vend,
521 or claim anything whatsoever; and defendants know nothing of any moneys that may have been expended in and about their so-called invention, or what, if any, licenses for the manufacture and sale thereof they may have sold or granted; but

defendant denies that the public, with the single exception of this defendant, have acquiesced in their claim.

Fifth. Defendant further says that upon investigation it became convinced and charges the fact to be that the so-called invention of complainants has been long known to the general public, and that in the specific form, as described in the complainants' bill, it was of no value as a mechanical device; that owing to necessary imperfections in the material and manufacture of devices of this sort the instability of the gearing and the consequent irregular vibrations of the valves was such as to render the devices of little or no value.

This defendant, consequently believing that the device was public property, instructed one of its workmen to devise something to overcome this defect, and as assignee of his invention has procured to be patented a device for overcoming such defects and is making use of the same, though not in large quantities.

Sixth. And defendant further shows, upon information and belief, that in or about the year 1865 there was in public use in Bowling Green, Kentucky, on a switch engine employed on the Louisville and Nashville railroad, a device similar in all respects to that described in the complainants' claim and used for the same purpose; that this defendant has been unable to procure the names of the parties who examined and operated said engine containing said device, and prays that he may insert the same when he shall hereafter discover them.

Seventh. That in the year 1858 one James Farrabee procured a patent in England for a cut-off valve gear having an identical arrangement and embodying precisely the same principles as
522 those contained in complainants' claim; that such patent was numbered 2858 for the year 1858, and differs from the device of complainants only in this—that where complainants have two intermeshing cog-wheels of equal diameter the English device had cog-wheels one of which contained twice as many teeth as the other, but the mechanical results arrived at were the same.

Eighth. That in the year 1853 a patent was granted to one Shaw in England, numbered 210 of that year, for a device embodying the principle of complainants' claim.

Ninth. That defendant is informed that certain persons, whose names it cannot now give, in Taunton, Massachusetts, manufactured and used precisely similar devices many years ago, and that defendant is causing extensive inquiries to be made in that vicinity, and asks that it may be permitted to amend this answer, including the names and residences of such persons.

Wherefore this defendant prays to be hence dismissed with its costs and charges in this behalf sustained.

JOHN NICHOLS, *President.*
EDWIN C. NICHOLS, *Secretary.*

ALFRED RUSSELL,
C. F. BURTON,
Solicitors and of Counsel for Defendant.

The answer of the above-named defendant, Nichols, Shepard &

Co., was taken, under the common seal of said corporation, as by the seal affixed appears, at Battle Creek, the 1st day of September, A. D. 1881.

[CORPORATE SEAL.]

ALFRED RUSSELL,
C. F. BURTON,
Solicitors and of Counsel for Defendant.

(Indorsed:) 2753. United States circuit court. In equity. Elon A. Marsh *et al. vs.* Nichols, Shepard & Co. Answer of defendant. Filed September 22, 1881. A. Mandell, clerk.

To this answer complainants replied September 30th, 1881:

522*a* *Replication.*

The Circuit Court of the United States for the Eastern District of Mich. In Equity.

ELON A. MARSH, MINARD LAFEVER, and JAMES SCOTT, Compl'ts,
vs.
NICHOLS, SHEPARD & Co., a Corporation, Def'ts.

The replication of Elon A. Marsh, Minard La Fever, and James Scott, complainants, to the answer of Nichols, Shepard and Co., a corporation, defendants.

These repliants, saving and reserving to themselves now and at all times hereafter all and all manner of benefit and advantage of exception which may be had or taken to the manifold insufficiencies of the said answer, for replication thereunto say that they will aver, maintain, and prove their bill of complaint to be true, certain, and sufficient in the law to be answered unto, and that the said answer of the said defendants — uncertain, untrue, and insufficient to be replied unto by these repliants; without this, that any other matter or thing whatever in the said answer contained material or effectual in the law to be replied unto and not herein and hereby well and sufficiently replied unto, confessed and avoided, traversed or denied, is true; all which matters and things these repliants are and will be ready to aver, maintain, and prove as this honorable court shall direct, and humbly pray as in and by their said bill they have already prayed.

R. A. PARKER,
Solicitor for Complainants.

Dated — day of ——, A. D. 188–.

[Endorsed:] 2753. The circuit court of the United States for the eastern district of Michigan. In equity. Elon A. Marsh *et al.*, complainants, *vs.* Nichols, Shepard & Co., defendants. Replication. Filed this 30th day of September, 1881, in clerk's office. A. Mandell, clerk. —— ——, solicitor for complainant.

523 In the Circuit Court of the United States for the Eastern District of Michigan. In Equity.

ELON A. MARSH, MINARD LEFEVER, JAMES SCOTT
vs.
NICHOLS, SHEPHERD & CO.

And now comes the said defendant, Nichols, Shepherd & Co., and shows unto the court that since the signing and filing of its answer hereinbefore signed and filed it has discovered evidence of the existence of certain patents granted in England to divers persons, which defendant is advised describe in language and delineate in figure mechanical devices which embody the same combination as that which is described in complainants' patent; that such patents are described in English patent No. 2758 of 1859, granted to Charles Sells, and in patent No. 3308 of 1865, granted to W. Clark, and in other patents of later years.

That defendant, when served with complaint in this cause, procured investigation to be made among the various records accessible to its attorney, but did not make discovery of the above-indicated inventions in time to give notice of them to complainant in its said answer, and that after its said answer was filed it caused more complete search to be made, and that the knowledge of the said devices was had for the first time by defendant about the middle of December, 1881. Wherefore petitioner prays that it may amend its said answer heretofore filed in this cause by including therein a notice in the following words: This defendant further says that it is informed and believes that the invention described in the patent in said complainant's bill named and described was not novel,

524 but was described anterior to the supposed discovery thereof by the said complainant in the specifications of the following English patents:

Patent No. 2758 of 1859, granted to Charles Sells; patent No. 3308, granted to W. Clark.

(Signed) NICHOLS, SHEPHERD & CO.,
By E. C. NICHOLS, *Treasurer.*

STATE AND EASTERN DISTRICT OF MICHIGAN, *County of Calhoun,* } *ss:*

E. C. NICHOLS, being duly sworn, deposes and says that he is treasurer of said corporation; that the preparation of the defense in the above-entitled cause has been entrusted to the care of this deponent, and that the said petition has been read to deponent and its contents are known to him, and that the facts therein stated are true to the best of deponent's information, knowledge, and belief.

(Signed) E. C. NICHOLS.

Subscribed and sworn before me this 11th day of January, 1882.

(Signed) FRANK W. DUNNING,
Notary Public.

SIR: Please take notice that, relying on the foregoing petition, I shall appear in court on Monday, the 16th day of January, 1882, and move the court for a rule granting permission to defendant to amend its answer and give the notice specified in the said petition. Such application will be made at the opening of court or as soon thereafter as counsel can be heard.

ALFRED RUSSELL,
Solicitor for Defendant.

To R. A. Parker, Esq., solicitor for complainants.

525 (Indorsed:) Circuit court of the United States for E. D. of Michigan. In equity. Elon A. Marsh *vs.* Nichols, Shepherd & Co. Petition and notice of motion for order to amend. Alfred Russell, attorney for defendant, 91 Griswold street (rooms 48 to 49), Detroit.

Circuit Court of the United States for the Eastern District of Michigan. In Equity.

ELON A. MARSH *et al.*
vs.
NICHOLS, SHEPHERD & Co.

And now comes the said defendant and moves the court now here that a rule be entered in this cause allowing defendant to amend its answer in accordance with its petition for that purpose heretofore filed in this cause, and that an extension of time be granted to defendant to enable it to introduce testimony in support of its said answer.

This motion is based on the said petition and on the affidavits herewith filed and served.

ALFRED RUSSELL,
Solicitor for Defendant.

SIR: The foregoing motion will be brought on for argument on Monday, the 23d of January, at the opening of court on that day or, etc.

ALFRED RUSSELL,
Solicitor for Defendant.

Detroit, January 20, 1882.

526 In the Circuit Court of the United States for the Eastern District of Michigan. In Equity.

ELON A. MARSH, MINARD LEFEVER, JAMES SCOTT
vs.
NICHOLS, SHEPHERD & Co.

STATE AND EASTERN DISTRICT OF MICHIGAN, *County of Calhoun,* } *ss:*

E. C. NICHOLS, being duly sworn, deposes and says that he is the treasurer of the defendant corporation, and that preparation of the

defense of the said defendant in this suit has been mainly entrusted to deponent; that upon receiving a copy of complainants' bill he began an investigation and procured others to make an investigation relative to the prior use by others than complainants of the device described and claimed to be covered by the letters patent described in complainants' bill.

That as a result of such investigation deponent learned that various patents had been granted in England which deponent was advised anticipated complainants' device, and deponent advised his counsel of such discoveries, and a notice thereof was inserted in defendant's answer.

Deponent also was informed that devices similar to that described in complainants' bill had been made and used in this country; that deponent's information in this respect was not entirely satisfactory, and deponent caused such notice thereof to be inserted in the said answer as he then thought he was justified in making, with the statement appended to said notice that deponent desired to make further investigations and to give such further notice as his further investigations would warrant.

527 That upon the filing of defendant's answer deponent did not cease making investigation and continued to procure investigation to be made by others, and in December, 1881, received information that certain other English patents existed covering devices which deponent is advised are mechanically equivalent to the device claimed by complainants.

That deponent immediately and about the 14th day of December advised his counsel of such discoveries, and requested him to verify such discoveries and take proper action concerning the notice to be given thereof; that deponent is still continuing his investgation relative to said matter; and further deponent saith not.

E. C. NICHOLS.

Subscribed and sworn to before me this 9th day of January, A. D. 1882.

FRANK W. DUNNING,
Notary Public, Calhoun County, Michigan.

[Endorsed:] In the circuit court of the United States for the eastern district of Mich. In equity. Elon A. Marsh *vs.* Nichols, Shepard & Co. Motion for leave to amend answer and extension of time to take testimony. Alfred Russell, sol'r for def't.

In the Circuit Court of the United States for the Eastern District of Michigan. In Equity.

ELON A. MARSH
vs.
NICHOLS, SHEPHERD & CO.

Motion for leave to amend answer and for extension of time to take testimony.

ALFRED RUSSELL,
Solicitor for Defendant.

528 *Order Granting Leave to File Amendment to Answer.*

At a session of the circuit court of the United States for the eastern district of Michigan continued and held, pursuant to adjournment, at the district court room, in the city of Detroit, on Monday, the twenty-third day of January, in the year one thousand eight hundred and eighty-two.

Present: Honorable Henry B. Brown, district judge.

ELON A. MARSH, MINARD LEFEVER, and JAMES SCOTT
vs.
NICHOLS, SHEPHERD & Co. } In Equity.

The motion of defendants for leave to file amended answer in this cause, now coming on to be heard, is argued by counsel for respective parties, and, the same having been duly considered, it is ordered such leave to be granted upon payment by defendant to complainants of a solicitor's fee of ten dollars; and it is further ordered that the time to take testimony in said cause be extended ninety days from this date, forty-five days of which time is granted to complainants in which to take their testimony and forty-five days thereof to defendant in which to take its testimony.

529 On the 23d of January, 1882, on foregoing petition and order, defendant amended its answer as follows:

(Title of court and cause.)

And now comes the said defendant, and, under the permission of the court, amends its said answer heretofore filed in this cause, and for amendment thereto says:

This defendant further says that it is informed and believes that the invention described in the patent in said complainants' bill named and described was not novel, but was described anterior to the supposed discovery thereof by the said complainant in the specification of the following English patents:

Patent No. 2758 of 1859, granted to Charles Sells.

Patent No. 3308 of 1865, granted to W. Clark.

NICHOLS, SHEPHERD & CO.,
By E. C. NICHOLS, *Treasurer.*

ALFRED RUSSELL,
Solicitor for Defendant.

Endorsed: 2753. United States circuit court *of the U. S.* for the E. D. of Mich. In equity. Elon A. Marsh *vs.* Nichols, Shepard & Co. Amendment to answer. Filed in clerk's office March 10, 1882, by consent as of Jan'y 23rd, 1882. A. Mandell, clerk.

529*a* The Circuit Court of the United States for the Eastern District of Michigan. In Equity.

ELON A. MARSH, MINARD LA FEVER, and JAMES SCOTT, Compl'ts,
vs.
NICHOLS, SHEPARD & Co., a Corporation, Def'ts.

The replication of Elon A. Marsh, Minard La Fever, and James Scott, complainants, to the amendment to an amended answer of Nichols, Shepard & Co., a corporation, defendants.

These repliants, saving and reserving to themselves now and at all times hereafter all and all manner of benefit and advantage of exception which may be had or taken to the manifold insufficiencies of the said amended answer, for replication thereunto say that they will aver, maintain, and prove their bill of complaint to be true, certain, and sufficient in the law to be answered unto, and that the said amended answer of the said defendants — uncertain, untrue, and insufficient to be replied unto by these repliants; without this, that any other matter or thing whatever in the said answer contained material or effectual in the law to be replied unto and not herein and hereby well and sufficiently replied unto, confessed and avoided, traversed or denied, is true; all which matters and things these repliants are and will be ready to aver, maintain, and prove as this honorable court shall direct, and humbly pray as in and by their said bill they have already prayed.

R. A. PARKER,
Solicitor for Complainants.

Dated — day of ——, A. D. 188–.

[Endorsed:] 2758. (190.) Circuit court of the U. S. for the eastern district of Mich. In equity. Elon A. Marsh, Minard La Fever, and James Scott, complainants, *vs.* Nichols, Shepard & Co., defendants. Replication to am'd answer. We hereby consent that this replication may be as of the 23rd day of January, 1882. Filed in clerk's office March 17, 1882. A. Mandell, clerk. —— ——, solicitor for complainants.

530 *Motion to Strike Exhibit "A" from Files.*

Circuit Court of the United States for the Eastern District of Michigan. In Equity.

ELON A. MARSH, MINARD LEFEVER, and JAMES SCOTT
vs.
NICHOLS, SHEPARD & Co.

UNITED STATES OF AMERICA,
State and Eastern District of Michigan, } *ss:*

And now comes the said defendant, by Alfred Russell, its solicitor, and moves the court now here to strike from the files and from the testimony in this court a certain paper marked as Exhibit "A," by

Eugene Converse, notary public, before whom testimony was taken from complainants, for the reason that said paper, Exhibit "A," has been materially changed, without the consent of defendant or defendant's solicitors, by the addition thereto of what purports to be the signature of "A. Bell," acting Secretary of the Interior. Said motion is founded on the affidavit of Charles F. Burton, herewith filed.

ALFRED RUSSELL,
Solicitor for Defendant.

531 In the Circuit Court of the United States for the Eastern District of Michigan. In Equity.

ELON A. MARSH, MINARD LEFEVER, JAMES SCOTT
vs.
NICHOLS, SHEPHERD & CO.

UNITED STATES OF AMERICA,
State and Eastern District of Michigan, } *ss:*

CHARLES F. BURTON, being duly sworn, deposes and says that he attended, at Battle Creek, Mich., in November, 1881, at the examination of witnesses called on behalf of complainants before Eugene Converse, a notary public in Battle Creek, Michigan; that at said time and as a part of the testimony on behalf of said complainants the said complainants produced and offered in evidence a certain paper, partly written and partly printed, bearing the seal of the Interior Department of the United States, and claimed by the said complainants to be original letters patent granted by the United States to said Elon A. Marsh and Minard Lefever, conferring on them the exclusive right to a certain device therein described, being the same device described in complainants' bill of complaint filed in this cause; that said paper was received by said Eugene Converse, notary public, and by him marked Exhibit "A," to be filed in said cause, but that said Exhibit "A" was not retained by said Eugene Converse and attached to the testimony taken by him, but under an agreement between the respective solicitors for complainants and defendant was retained by complainants; that at the time said Exhibit "A" was offered in evidence deponent examined it and found that it was not signed by the Secretary of the Interior or by any one purporting to sign in lieu of the Secretary of the Interior, and
532 deponent therefore concluded that the said paper was not a valid letter patent; that deponent did not again see said Exhibit "A" until Thursday, the 30th day of March last past, and deponent then learned that since said Exhibit "A" was offered in evidence at Battle Creek it has been materially altered by the addition thereto of a signature of "A. Bell," acting Secretary of the Interior; that said signature was added to exhibit after it was offered and introduced in evidence and before said 30th day of March without the knowledge or consent of said defendant, as this deponent is advised, who has been hitherto acting as solicitor for and in active charge of the defendant's case; that, except as herein stated, deponent does not know when or by whom said signature was added.

CHARLES F. BURTON.

Subscribed and sworn to before me this sixth day of April, 1882.
CHARLES H. CAMPBELL,
Notary Public, Wayne County, Michigan.

(Indorsed:) 2753. Circuit court of U. S. for E. D. of Mich. In equity. Elon A. Marsh *et al. vs.* Nichols & Shepherd. Motion to strike Exhibit "A," complainants' testimony, from files and affidavit supporting motion. Filed April 6th, 1882. John Graves, deputy clerk.

533 *Stipulation as to Exhibit "A."*

Circuit Court of the United States for the Eastern District of Michigan. In Equity.

ELON A. MARSH, MINARD LEFEVER, and JAMES SCOTT, Complainants,
vs.
NICHOLS, SHEPHERD & CO., Defendant.

It is hereby stipulated by and between the respective parties hereto, by their respective counsel, that the following are admitted to be the facts of a portion thereof relative to Complainants' Exhibit "A," and that the same without further proof may be considered, so far as relevant, competent, or material, on any motion or at any stage of the cause, including final hearing.

That the paper marked Exhibit "A" by Eugene M. Converse, special examiner, was received from the Patent Office of the United States by complainants Marsh and Lefever on or about the 2d day of January, A. D. 1881, in all respects in the same condition as it now is, save the words "A. Bell" were not thereon where they now appear; and, further, that the signature of E. M. Marble, Commissioner of Patents, and the seal of the Patent Office of the United States are genuine.

That complainants, Elon A. Marsh, Minard Lefever, and James Scott, or either of them or their counsel had no knowledge of any omission of the signature of the Secretary of the Interior to said Exhibit "A," and in all respects supposed it regular, never having had their attention called to the same until long after the commencement of this suit and on or about the 12th day of February, A. D. 1882.

534 That the said Exhibit "A" was thereafter, on or about the 17th day of February, 1882, sent by their solicitor, R. A. Parker, to the United States Patent Office, at Washington, D. C., accompanied by a request from complainants Marsh and Lefever to have the mistake corrected, and also by a letter from their said solicitor and counsel, which said letter was as follows:

DETROIT, MICH., *February* 17, 1887.

To the Commissioner of Patents, Washington, D. C.

SIR: Herewith I enclose patent No. 236,052, granted to Elon A. Marsh and another December 28, 1880; also a letter from Elon A.

Marsh to you, requesting the correction of a mistake, to wit, the failure of the Secretary of the Interior to sign the same. It does not seem to me that rule 164 covers this case, as it is not a mistake in the specification, and I can find no rule of practice or decision by the Secretary of the Interior on the point, yet I presume such cases have occurred before this in the office.

I would suggest that, if possible, the correction (or signing) should be so made that all of the patentee's rights in the patent would remain intact from its issue—*i. e.*, a signing *nunc pro tunc.*

If this cannot be done, and done without another issue, I submit that it should run for 17 years from the date of the new issue.

See Grant *vs.* Raymond, 6 Pet., 2412.
Also Woodworth *vs.* Hall, 1 W. & M., 260.

If there should be any doubt about the proper method of correction and its legal effect I would be glad to have you notify me on the views of the office before correction, as suits are already pending, based upon this patent, in which I am solicitor for patentees, and upon which the effect of this error may be very serious in their rights.

Yours very truly, R. A. PARKER.

535 That said Exhibit "A" was, on or about the 24th day of February, A. D. 1882, returned to said solicitor, R. A. Parker, signed "A. Bell, acting Secretary of the Interior," and with no other further change thereof.

April 13, 1882.

ALFRED RUSSELL,
CHARLES F. BURTON,
Solicitors for Defendants.

R. A. PARKER,
Solicitor for Complainants.

(Indorsed:) 2753. United States court, E. D. of Michigan. In equity. Elon A. Marsh *et al. vs.* Nichols, Shepherd & Co. Stipulation as to Exhibit "A." Filed in clerk's office April 15th, 1882. A. Mandell, clerk.

Order Denying Motion to Strike Out Exhibit.

At a session of the circuit court of the United States for the eastern district of Michigan continued and held, pursuant to adjournment, at the district court room, in the city of Detroit, on Monday, the twenty-sixth day of June, in the year one thousand eight hundred and eighty-two.

Present: The Hon. Stanley Matthews, associate justice of the Supreme court, and Honorable Henry B. Brown, district judge.

ELON A. MARSH, MINARD LEFEVER, and JAMES SCOTT
vs.
NICHOLS, SHEPHERD & CO. } In Equity.

In this case a motion by defendant to strike an exhibit from

the files having been brought on for argument, after hearing Messrs. Burton & Russell in favor of said motion and Mr. R. A. Parker in opposition thereto, said motion is by the court now here denied without prejudice to the right of defendant to object to the introduction of such exhibit on the hearing of the cause.

Judge Brown did not sit in this case.

535*a* *Order Suppressing Deposition of James Miles.*

At a session of the circuit court of the United States for the eastern district of Michigan continued and held, pursuant to adjournment, at the district court room, in the city of Detroit, on Monday, the eleventh day of September, in the year one thousand eight hundred and eighty-two.

Present: The Honorable Henry B. Brown, district judge.

ELON A. MARSH, MINARD LAFEVER, and JAMES SCOTT
vs.
NICHOLS, SHEPARD & COMPANY. } In Equity.

In this cause a motion by the complainants to suppress the deposition of James H. Miles, heretofore taken and filed on behalf of the defendant, having been brought on for argument, after hearing Mr. Parker in favor of said motion and Mr. Burton in opposition thereto, said motion is granted and said deposition is hereby suppressed.

536 *Order Allowing Amendment to Answer.*

At a session of the circuit court of the United States for the eastern district of Michigan continued and held, pursuant to adjournment, at the district court room, in the city of Detroit, on Monday, the third day of July, in the year one thousand eight hundred and eighty-two.

Present: The Honorable Henry B. Brown, district judge.

ELON A. MARSH, MINARD LEFEVER, and JAMES SCOTT
vs.
NICHOLS, SHEPHERD & CO. } In Equity.

In this cause a motion by defendant for leave to amend answer having been brought on for argument, after hearing counsel for respective parties thereon, leave is granted to said defendant to amend its answer by including therein the following words: "This defendant further says that it is informed and believes that the invention described in complainants' bill, named and described, was not novel, but was described anterior to the supposed discovery thereof by the said complainants in the specification of the following English patent, patent No. 1424 of 1873, granted to Robert Asquith." On payment by said defendant to plaintiffs'
537 attorney of ten dollars attorney fee, on this motion and on motion of Mr. Parker, of counsel for complainants, the time to take proof in this cause is hereby extended sixty days.

Defendant again amended its answer as follows:

(Title of court and cause.)

And now comes the said defendant, under leave of the court heretofore granted, and amends its answer by inserting the following clause:

This defendant further says that it is informed and believes that the invention described in the patent in said complainants' bill — and described was not novel, but was described anterior to the supposed discovery thereof by the said complainants in the specifications of the following patent: Patent No. 1424 of 1873, granted to Robert Asquith.

NICHOLS, SHEPHERD & CO.,
By C. F. BURTON, *Counsel for Defendant.*

ALFRED RUSSELL,
Solicitor for Defendant.

Signature of defendant in person is waived, but the amendment may be signed by defendant's counsel for it.

R. A. PARKER,
Solicitor for Complainants.

[Endorsed:] 2753. Circuit court of the United States for the eastern dist. of Mich. In equity. Elon A. Marsh *vs.* Nichols, Shepard & Co. Amendment to answer. Filed in clerk's office Sept. 14 as of July 5th, 1882. Walter S. Harsha, clerk. Alfred Russell, sol'r for def'ts.

And complainants replied:

537*a* *Replication.*

The Circuit Court of the United States for the Eastern District of Michigan. In Equity.

ELON A. MARSH, MINARD LA FEVER, and JAMES SCOTT, Compl'ts,
vs.
NICHOLS, SHEPARD & CO., a Corporation, Def'ts.

The replication of Elon A. Marsh, Minard La Fever, and James Scott, complainants, to the 2nd amendment to and amended answer of Nichols, Shepard & Co., a corporation, defendants.

These repliants, saving and reserving to themselves now and at all times hereafter all and all manner of benefit and advantage of exceptions which may be had or taken to the manifold insufficiencies of the said second amended answer, for replication thereunto say that they will aver, maintain, and prove their bill of complaint to be true, certain, and sufficient in the law to be answered unto, and that the said second amended answer of the said defendants is uncertain, untrue, and insufficient to be replied unto by these repliants; without this, that any other matter or thing whatever in the said answer

contained material or effectual in the law to be replied unto and not herein and hereby well and sufficiently replied unto, confessed and avoided, traversed or denied, is true; all which matters and things these repliants are and will be ready to aver, maintain, and prove as this honorable court shall direct and humbly pray as in and by their said bill they have already prayed.

R. A. PARKER,
Solicitor for Complainants.

Dated — day of ——, A. D. 188–.

[Endorsed:] 2753. The circuit court of the U. S. In equity. Elon A. Marsh *et al.*, complainants, *vs.* Nichols, Shepard & Co., a corporation, defendants. Replication. Filed this 5 day of July, 1882. Walter S. Harsha, clerk. —— ——, solicitor for complainant.

537*b* *Heard and Submitted.*

At a session of the circuit court of the United States for the eastern district of Michigan continued and held, pursuant to adjournment, at the district court room, in the city of Detroit, on Saturday, the tenth day of February, in the year one thousand eight hundred and eighty-three.

Present: The Honorable Henry B. Brown, district judge.

ELON A. MARSH, MINARD LAFEVER, and JAMES SCOTT
vs.
NICHOLS, SHEPARD & COMPANY. } In Equity.

This cause coming on to be heard on pleadings and proofs, after hearing the arguments of counsel, said cause is submitted.

537*c* *Stipulation Relative to Exhibit A.*

DEPARTMENT OF THE INTERIOR.

Be it remembered that Edgar M. Marble, who has signed the foregoing certificate, is Commissioner of Patents, and that to his attestations full faith and credit are and ought to be due.

In testimony whereof I have hereunto subscribed my [SEAL.] name and caused the seal of the Department to be affixed on this twenty-ninth day of April, in the year of our Lord one thousand eight hundred and eighty-two.

H. M. TELLER,
Secretary of the Interior.
H. M. L.

DEPARTMENT OF THE INTERIOR,
UNITED STATES PATENT OFFICE,
WASHINGTON, D. C., *April 28th*, 1882.

SIR: In the matter of the letters patent granted to Elon A. Marsh and Minard Lefever, upon the application of said Elon A. Marsh,

December 28th, 1880, for an improvement in steam-engine
538 valve gear, concerning the issuance of which you ask in your communication of the 18th inst. to be furnished with certain information under the seal of this office, you are informed that the files and records of this office show as follows:

First. That the application of Elon A. Marsh, of Battle Creek, Calhoun county, Michigan, for letters patent for improvements in steam — valve gear, accompanied by the first Government fee, $15, was received in this office May 3d, 1880, and numbered 8877, series of 1880.

Second. That the first action by the examiner was May 24th, 1880, and the last November 19th, 1880, allowing the case.

Third. That notice of said allowance, as provided by section 4885 Revised Statutes, was mailed November 22d, 1880, to Elon A. Marsh, ass'or, care Alexander & Mason, ass'or, present; copy attached, marked "A."

Fourth. That the final Government fee, $20, was paid December 9th, 1880, by Messrs. Alexander & Mason, the attorneys in the case, with instructions to send the letters patent to Marsh & Lefever, Battle Creek, Mich.

Fifth. That the case was placed in the weekly issue of patents December 25th, numbered 236,052, and duly entered in the alphabetical list of patentees, vol. 2, 1880, on page 13, in the words and figures as follows:

No.	Patentee.	Invention.	Date of patent.
236,052.	Elon A. Marsh, ass'or ½ to Minard Lefever.	Steam-engine valve gear.	December 28.

Sixth. That the weekly issue of patents issued December 28, 1880, consisted of letters patent numbered consecutively from 235,844 to 236,136, both inclusive, none of which, save 235,865, 235,873, and 235,987, were withdrawn from the issue after it was originally made up, as appears from memoranda of withdrawals preserved in the office.

Seventh. That the specification and drawing of said letters
539 patent were duly printed and published, under the provision of section 490 R. S., as part of the issue of December 28th, 1880, as letters patent No. 236,052 of that date. See pages 1232 and 340, drawings, monthly volume specifications, and drawings of patents, U. S. Patent Office, December, 1880, certified copies.

Eighth. That the grant of said letters patent were regularly and completely prepared, presented to the Commissioner of Patents and acting Secretary of the Interior for signature, and the seal of the Patent Office affixed, as appears by the record thereof under No. 236,052, in No. 361, heads of patents, Patent Office, December 21, 1880, to January 11th, 1881.

Ninth. That said letters patent, supposed to be complete in every respect, were mailed December 28th, 1880, addressed to Messrs. Marsh & Lafever, Battle Creek, Mich. For record thereof see alphabetical list of patentees, vol. 2, 1880, page 13.

But it appears that said letters patent were returned to this office

February 23d, 1882, by Mr. R. A. Parker and Mr. E. A. Marsh, and attention called to the fact that the signature of Hon. A. Bell, who signed the patents issued December 28th, 1880, as acting Secretary of the Interior, had been omitted therefrom. They were presented to Mr. Bell, still in office, who affixed his signature, and the letters patent were returned February 24th, 1882, to Mr. R. A. Parker, Bank block, Detroit, Mich.

The omission of the signature of the acting Secretary, which escaped notice when the letters patent were issued and mailed, was, as established by the history and record of the case given above, evidently purely accidental, and might easily have resulted—probably did result—from their being inadvertently laid or withdrawn from before the acting Secretary while he was in the act of signing.

All letters patent are issued on Tuesday. On Tuesday
540 morning of each week the whole issue of that date, after being carefully revised and numerically arranged, are presented in one lot to the Commissioner of Patents for his signature, the seal of the Patent Office is then affixed, and they are then laid before the Secretary of the Interior for signature, and then returned in one lot to the issue and gazette division of the Patent Office for delivery.

The evidence is conclusive that this patent was duly and properly prepared; that it was forwarded with the other patents of that date to the Commissioner of Patents for his signature, which it received; that the seal of the Patent Office was duly affixed, and that it was returned to the issue division of the Patent Office from the Secretary's office with the other patents as signed and mailed as a patent duly issued.

In all respects save in the matter of the omission of the signature of the acting Secretary of the Interior, which was discovered by the return of the letters patent to this office February 23d, 1882, the records and files and all the evidence obtainable in the Patent Office show that letters patent No. 236,052 were *only* and regularly issued upon the application of Elon A. Marsh, inventor, and Minard Lefever, assignee of one-half interest, December 28th, 1880, for an improvement in steam-engine valve gear.

Very respectfully, E. M. MARBLE,
Com. of Patents.

Mr. C. M. Alexander, of counsel for Elon A. Marsh, present.

541 All communications should be addressed: The Commissioner of Patents, Washington, D. C.

Serial No. 8877.

DEPARTMENT OF THE INTERIOR,
U. S. PATENT OFFICE,
WASHINGTON, D. C., *Nov. 22d*, 1880.

Elon A. Marsh, assn.; Alexander & Mason, asso., present.

SIR: Your application for a patent for an improvement in steam-

engine valve gear filed May 3d, 1880, has been examined and allowed.

The final fee, twenty dollars, must be paid and the letters patent bear date as of a day not later than six months from the time of this present notice of allowance. If the final fee is not paid within that period the patent will be withheld and your only relief will be by a renewal of the application, with additional fees, under the provisions of section 4897 Revised Statutes. The office aims to deliver patents upon the day of their date and on which their term begins to run, but to do this properly applicants will be expected to pay their final fees at least twenty days prior to the conclusion of the six months allowed them by law. The printing, photo-lithographing, and engrossing of the several patent parts preparatory to final signing and sealing will consume the intervening time, and such work will not be done until after payment of the necessary fees.

When you send the final fee you will also send, distinctly and plainly written, the name of the inventor and title of invention as above, giving date of allowance—which is the date of this circular—date of filing, and, if assigned, the names of the assignees.

If you desire to have the patent issued to assignees an assignment containing a request to that effect, together with the fee for
542 recording the same, must be filed in this office on or before the date of the payment of final fee. Additional copies of specifications and drawings will be charged for at the following rates: Single copies, uncertified, 25 cents; twenty copies or more, 10 cents each. The money should accompany the order.

Very respectfully, E. M. MARBLE,
Commissioner of Patents.

The within title is that given by the examiner in charge, as most appropriate to your invention. Should you desire a change in the same satisfactory reasons must be given therefor on or before the payment of the final fee.

In remitting the final fee give the serial number at the head of this notice.

Circuit Court of the United States for the Eastern District of Michigan. In Equity.

ELON A. MARSH, MINARD LEFEVER, and JAMES SCOTT, Complainants,
vs.
NICHOLS, SHEPHERD & Co., Defendants.

It is hereby stipulated by and between the parties in this cause that the annexed statement by Edgar M. Marble, Commissioner of Patents, may be considered in evidence in the above cause without objection for want of form or of oath, but subject on the part of either party to all other questions of competency, relevancy, or materiality.

Dated November 21st, 1882.

ALFRED RUSSELL,
Solicitor for Defendant.
R. A. PARKER,
Solicitor for Complainants.

543 (Indorsed:) United States circuit court. In equity. Elon A. Marsh *et al. vs.* Nichols, Shepherd & Co. Stipulation relative to Exhibit "A." Filed in clerk's office March 6, 1883. Walter S. Harsha, clerk.

Decree Dismissing Bill Without Costs to Either Party.

At a session of the circuit court of the United States for the eastern district of Michigan continued and held, pursuant to adjournment, at the district court room, in the city of Detroit, on Monday, the sixteenth day of April, in the year one thousand eight hundred and eighty-three.

Present: The Honorable Henry B. Brown, district judge.

ELON A. MARSH, MINARD LEFEVER, and JAMES SCOTT
vs.
NICHOLS, SHEPHERD & Co. } In Equity.

This cause came on to be heard and was argued by counsel for respective parties, and thereupon, upon consideration thereof, it is ordered, adjudged, and decreed that the bill of complaint in this cause be, and the same is hereby, dismissed without costs to either party.

544 *Plaintiffs' Claim of Appeal.*

Circuit Court of the United States for the Eastern District of Michigan. In Equity.

ELON A. MARSH, MINARD LEFEVER, and JAMES SCOTT, Complainants and Appellants,
vs.
NICHOLS, SHEPHERD & Co. (a Corporation), Defendant and Appellee.

To the honorable the Supreme Court of the United States:

The appeal of Elon A. Marsh and Minard Lefever and James Scott, the above-named complainants and appellants, respectfully showeth that on the 9th day of June, A. D. 1881, the above-named complainants filed their bill of complaint in the said circuit court of the United States for the eastern district of Michigan, in equity, against the said defendant, alleging that the said complainants were the owners of a certain letters patent of the United States for a certain invention, and that said defendant was unlawfully infringing the same, and, among other things, praying for an accounting and for a perpetual injunction to restrain said infringement; to which

said bill the said defendant filed its answer and complainants replied thereto, whereupon such proofs were taken and proceedings had in said cause that on the 16th day of April, 1883, a final decree was made and pronounced therein by the said circuit court, wherein it was in substance adjudged and decreed that the said complainants' bill be dismissed for want of equity, without costs.

Wherefore these appellants appeal from the whole of said
545 decree of said circuit court to the Supreme Court of the United States, and they respectfully pray that the decree of the said circuit court and the pleadings, proofs, record, and proceedings in said cause may be sent to the Supreme Court of the United States without delay, and that the said Supreme Court will proceed to hear the said cause anew, and that the said decree of the circuit court and every part thereof may be reversed and a decree made therein sustaining the complainants' said bill, with costs, and that such other and further decree may be made as to the Supreme Court may seem just.

(Signed) ELON A. MARSH,
MINARD LEFEVER,
JAMES SCOTT,
By R. A. PARKER,
Solicitor, etc.

R. A. PARKER,
Solicitor and of Counsel.

(Indorsed:) 2753. Circuit court of the United States for the eastern district of Michigan. In equity. Elon A. Marsh *et al.*, compl'ts, *vs.* Nichols, Shepherd & Co., defendant. Appeal of complainants. Filed February 26, 1885. Walter S. Harsha, clerk.

Order Allowing Plaintiffs' Claim of Appeal.

At a session of the circuit court of the United States for the eastern district of Michigan continued and held, pursuant to adjournment, at the district court room, in the city of Detroit, on Thursday, the twenty-sixth day of February, in the year one thousand eight hundred and eighty-five.

546 Present: The Honorable Henry B. Brown, district judge.

ELON A. MARSH, MINARD LEFEVER, and JAMES SCOTT
vs.
NICHOLS, SHEPHERD & CO. } In Equity.

And now come the said plaintiffs, by R. A. Parker, their solicitor, and file a claim of appeal to the Supreme Court of the United States from the decree of this court theretofore entered, which claim of appeal is hereby allowed.

Order Allowing Defendant's Claim of Appeal.

At a session of the circuit court of the United States for the eastern district of Michigan continued and held, pursuant to adjourn-

ment, at the district court room, in the city of Detroit, on Wednesday, the eleventh day of March, in the year one thousand eight hundred and eighty-five.

Present: The Honorable Henry B. Brown, district judge.

ELON A. MARSH, MINARD LEFEVER, and JAMES SCOTT
vs.
NICHOLS, SHEPHERD & Co. } In Equity.

And now comes the said defendant, by Charles F. Burton, of counsel, and files a claim of appeal to the Supreme Court of the United States from the order of this court suppressing the deposition of James Miles, which appeal is now hereby allowed, and bond on appeal is fixed at $250.

547 UNITED STATES OF AMERICA:

The Circuit Court of the United States for the Eastern District of Michigan.

I, Walter S. Harsha, clerk of the circuit court of the United States for the eastern district of Michigan, do hereby certify that the above and foregoing are true copies of the following papers and orders filed and entered in the cause of Elon A. Marsh *et al. vs.* Shepherd, Nichols & Co., No. 2753, in said court, in equity, as the same appears of record and on file in my office, viz:

1. Bill of complaint.
2. Answer.
3. Replication.
4. Order granting leave to file amended answer.
5. Amendment to answer.
6. Replication to amended answer.
7. Motion to strike Exhibit "A" from files.
8. Stipulation as to Exhibit "A."
9. Order denying motion to strike out exhibit.
10. Order allowing amendment to answer.
11. Order suppressing deposition of James Miles.
12. Amendment to answer.
13. Replication to second amended answer.
14. Minute of hearing and submission.
15. Stipulation relative to Exhibit "A."
16. Decree.
17. Plaintiffs' claim of appeal.
18. Order allowing plaintiffs' claim of appeal.
19. Order allowing defendant's claim of appeal.

548 That I have compared the said papers and orders with the originals, and they are true and correct transcripts therefrom and of the whole thereof except as noted.

In testimony whereof I have hereunto set my hand and affixed

[SEAL.] the seal of said court, at Detroit, in said district, this twelfth day of March, in the year one thousand eight hundred and eighty-five, and of the Independence of the United States of America the one hundred and ninth.

WALTER S. HARSHA, *Clerk.*

Exhibit 18. June 23, 1885. G. Gatrell, official stenographer, Marshall, Michigan.

549 Exhibit 18. Jun- 23, 1885. G. Gatrell, official stenographer, Marshall, Mich.

550 *Bill.*

Circuit Court of the United States for the Eastern District of Michigan. In Equity.

To the honorable the judges of the United States circuit court for the eastern district of Michigan, in equity:

Your orators, Elon A. Marsh and Minard Lafever, citizens of the State and eastern district of Michigan and residing at Battle Creek, in said State, bring this their bill of complaint against Nichols, Shepard and Company, a corporation organized and doing business under the laws of the State of Michigan, in said district, at said city of Battle Creek.

And thereupon your orators complain and say:

I. That the said Elon A. Marsh was the original and first inventor of a certain new and useful improvement in steam-engine valve gear, and which had not been known or used before his said invention and which was not at the time of the application for letters patent, as hereinafter mentioned, in public use or on sale with his consent or allowance.

II. That the said Elon A. Marsh, being as aforesaid the first inventor and discoverer of said improvements, and the said Minard Lafever, assignee of an undivided one-half interest therein from the said Elon Marsh, and being citizens of the United States, did obtain, on the 28th day of December, A. D. 1880, upon due application therefor, certain letters patent of the United States for said invention in due form of law, under the seal of the Patent Office of the United States, signed by the Secretary of the Interior thereof

551 and countersigned by the Commissioner of Patents, bearing the date and year last aforesaid, which letters patent were issued to the said Elon A. Marsh and Minard Lafever, as assignee aforesaid, and numbered 236,052, whereby there was granted and secured to the said Elon A. Marsh and Minard Lafever, their heirs, administrators, and assigns, for the term of seventeen years from and after the date thereof the full and exclusive right and liberty of making, constructing, using, and vending to others to be used the said invention and improvements as set forth in said letters patent, which are now on record in the United States Patent Office, *and* by the said letters patent or a certified copy of the same in court ready to be produced will more fully and at large appear, a copy of the specifications and drawings thereof being hereunto annexed, marked "Ex-

hibit A," by virtue whereof said Elon A. Marsh and Minard Lafever became the owners of all the rights and privileges granted and secured in and by said letters patent.

III. That the said Elon A. Marsh and Minard Lafever, being at that time the full and exclusive owners of said invention and letters patent, did, on or about the 1st day of March, A. D. 1881, by an instrument in writing sell, grant, and assign to one James Scott all their right, title, and interest in and to an undivided one-third interest of said letters patent and to all other inventions in regard to the same subject-matter, which said assignment was duly recorded in the Patent Office of the United States, at Washington, in Liber N 23 of Transfers of Patents, on page 193.

552 IV. That since the aforesaid assignment to the said James Scott there has arisen a controversy between these complainants and the said James Scott respecting the said one-third interest in said letters patent and the inventions; that said Scott has filed his bill in the circuit court for the county of Cook, State of Illinois, in equity, for the purpose of rescinding the said contract of assignment, and now disclaims any ownership interest in and to said letters patent and inventions made subsequent thereto or by virtue of said assignments, which said disclaimer, if good and sufficient, equitably reinvests your complainants with all the right, title, and interest to said invention and letters patent and any other invention within the terms of the said assignment to said Scott, which said controversy and suit is undecided and undetermined and is within the jurisdiction of the said court; that by virtue of said disclaimer and also directly said Scott refuses to join these complainants in this their bill, claiming to have no interest in the said patent and invention and yielding to these complainants all rights thereto.

V. That the said Elon A. Marsh was the original and first inventor of a certain other new and useful improvement for steam-engine valve gears which had not been used before his said invention and which was not at the time of his — in public use or on sale with his knowledge or consent with intent that the same should become public property or to relinquish his rights therein, and being as aforesaid the first inventor and discoverer of the said improvements, and the said Minard Lafever being an assignee of an

553 undivided interest therein, and being citizens of the United States, did, on the 28th day of September, 1881, file their application for letters patent upon said invention in the Patent Office of the United States; that upon examination thereof it was therein decided that the claims by said Marsh and Lafever, his assignee, to said invention were anticipated by letters patent dated July July 26, 1881, issued to the defendants *for* the cause, as assignee of one Andrew Hoag, and numbered 244,807; that thereupon your orators claimed, under the rules and practice of said office, an interference between said application of your orators and the owners of said patent, to wit, the defendants in this cause; that thereupon each party in said interference filed a preliminary statement as to the said facts of invention, claimed to be made respectively by each, in accordance with the rules and practice of said office; that a

large amount of testimony was taken therein, and such proceedings had after hearing the argument of both sides that upon the 5th day of September, 1884, the said Commissioner of Patents did adjudge that said Marsh was the prior, true, and original inventor of the improvements described in the said letters patent issued to said Andrew Hoag and assigned to the said defendant herein named, and that thereupon letters patent of the United States, properly executed, was ordered to issue and did issue in due form to the said Elon A. Marsh, on the 25th day of November, 1884, and numbered 308,567, and which are to the court now here shown, whereby there was granted to the said Elon A. Marsh, his heirs, administrators, and assigns, for the term of seventeen years from and after the date thereof the full and exclusive right and liberty of making, constructing, and using and vending to others to be used the said invention set forth in said letters patent, which are on record in the United States Patent Office, as by the said letters patent in said court ready to be produced will more fully and at large appear,

554 whereby the said Marsh became the owner of all rights and privileges granted in and by said letters patent, and that by assignment duly recorded the said Lafever has become owner of an undivided one-half interest therein, whereby the same has become vested in him, subject to the claims, rights, and interests of the said Scott.

VI. And your orators further allege that the invention described in said letters patent numbered 236,052, dated December 28, 1880, and the letters patent numbered 308,567, dated Nov. 25, 1884, are capable of being used and are necessarily used conjointly and in the same machine or mechanism.

VII. That by virtue of the premises they became and are now the exclusive owners of the said letters patent numbered 236,052 and the invention described therein, and also of the said letters patent numbered 308,567 and of the invention described therein, and of all the rights granted, secured, and intended to be granted and secured thereby, subject to said Scott's rights as may appear.

That since they have obtained said patents and become the owners thereof they have invested considerable money and have been to a great expense in and about said invention in making the same profitable to themselves and useful to the public, and that said inventions have been and are of great benefit and advantage, and that the public, with the single exception of the defendant, has acquiesced in the aforesaid rights of your orators, and your orators believe they will realize and receive large gains and profits therefrom if infringement by the said defendants can be prevented.

555 VIII. Yet the defendants, well knowing the premises and the rights secured to your orators aforesaid, but contriving to injure your orators and to deprive them of the benefits and advantages which might and otherwise would *secure* unto them from said inventions, after the issue of said letters patent number 236,052 and said letters patent number 308,567 as aforesaid and before the commencement of the suit did, as your orators are informed and believe, without license or allowance and against the will of your orators and

in violation of their rights and infringement of the aforesaid letters patent, unlawfully, wrongfully, and in defiance of the rights of your orators make, construct, use, and vend to others to be used on steam-engines valve gears made in accordance with and employing and containing in the same machine said invention or inventions shown, described, and claimed in each of said letters patent, and that they still continue so to do, and are threatening to make and vend to others to be used large quantities of said steam-engine valve gears and to supply the market therewith.

IX. All in defiance of the rights required by and secured to your orators by both the said letters patent as aforesaid, and in infringement thereof and of all the claims thereof, to their irreparable loss and injury, by which they have been and still are being deprived of great gains and profits which they might and otherwise would have obtained, but which have been received and enjoyed and are being received and enjoyed by defendants by and through their unlawful doings.

556 X. And your orators further show unto your honors on information and belief that said defendant is threatening to sell and dispose of such machines and improvements to other persons, and your orators say that the use of said invention and the preparations for and avowed determination to continue the same and to manufacture and sell said invention to other parties and the other aforesaid unlawful acts in disregard and defiance of your orators' rights have the effect to and do induce others to venture to infringe said patent in disregard of your orators' rights.

XI. They further show that they have caused notice to be given to said defendants of such infringements and of their rights to the premises, and requested them to desist and refrain therefor, and they have disregarded such notice and refused to desist from said infringement and still continue to make, use, and vend to others to be used said improved valve gear in infringement of said letters patent No. 236,052 and said letters patent No. 308,567 and all the claims thereof, in violation of your orators' rights.

XII. And forasmuch as your orators can have no adequate relief except in this court, to the end, therefore, that the said defendants may, if they can, show why your orators should not have the relief thereby prayed, *and* your orators pray that the said defendants may be required, according to the utmost and best of their knowledge, remembrance, information, and belief, full, true, direct, and perfect answer make, answer on oath being expressly waived, to the premises and to all the several matters hereinbefore stated, and especially whether they or either of them have made — is now making, using, and vending to others to be used the aforesaid described invention, and the extent thereof, *and* fully and particularly as if sep-

557 arately interrogated as to such and every such matters, and may be so compelled to account for and pay to your orators the profits by them acquired and the damages suffered by your orators from their unlawful acts.

And especially that said defendants' answer set forth—

First. Whether the said Elon A. Marsh was not prior to the 28th

day of December, 1880, the true, first, and original inventor or discoverer of the invention and discovery described in said letters patent 236,052, and every material part thereof, and, if not, who was or were the true, first, and original inventor or inventors of the same; and if any other person or persons was or were the true, first, and original inventor or inventors of the same, where he or they reside, and where and when he or they invented or discovered the same, and how the inventor or discoverer of such other person or persons, if any, differed, if at all, from the said invention or discovery of said Elon A. Marsh.

Second. Whether the said Elon A. Marsh was not prior to the 25th day of November, 1884, the true, first, and original inventor or discoverer of the said invention or discovery described in said letters patent numbered 308,567 in every material part therein; and, if not, who was or were the true and original inventor and inventors of the same; if any other *if any other* person or persons was or were the true, first, and original inventor or inventors of the same, where he or they reside and when he or they invented or discovered the same, and *that* the inventor or discoverer, if any, differed from the said Marsh.

558 Third. Whether or not the said Elon A. Marsh and Minard Lafever, his assignee, did not make their said application to the Commissioner of Patents *for* the United States for a patent upon the invention and said letters patent No. —, and whether there was not an interference in said office of the Commissioner of Patents between the said application and a patent obtained by one Andrew J. Hoag, assigned to said defendants, and whether or not the same did not proceed to a hearing upon testimony, and whether or not the same was not ultimately decided upon an appeal by the Commissioner of Patents to the effect that the said Marsh was the first, original, and true inventor of the invention and discovery described in the said letters patent No. 308,567, and whether or not the said letters patent No. 308,567 did not issue to the said Elon A. Marsh and Minard Lafever, his assignee, in pursuance of the aforesaid decision and by the order of the aforesaid Commissioner of Patents of the United States.

559 Fourth. Whether or not the said invention described in said original letters patent No. 236,052 and the invention described in said letters patent No. 308,567 are not capable of being used upon the same machine and in the same structure, and whether or not the said defendants *has* not been and *is* not now using the said invention described in said letters patent conjointly in the same valve gears upon steam-engines which they have been and are still manufacturing.

Fifth. Whether the said defendants have at any time, and, if so, when and where, made, sold, used, or caused to be made, sold, used, any steam-engine valve gears constructed and operating substantially as described in the specifications and drawings of said letters patent No. 236,052 and No. 308,567, and if the valve gears made, used, and sold by said defendants, if any there are, have differed from those described in said letters patent, in what particular they

differed therefrom, or in what respect they were differently applied, combined, or operated from those described in said letters patent, if at all.

Sixth. Whether the defendant or defendants have not made large gains and profits from the use and sale of such valve gears embodying said inventions; and, if so, for what time, to what extent, and amount.

And your orators pray that the defendant, Nichols, Shepherd and Company, its servants, agents, attorneys, and workmen and each and every one of them, may be restrained and enjoined provisionally and perpetually by the order and injunction of this honorable court from directly or indirectly making, using, vending, working, or putting into practice, operation, or use or in any way counterfeiting or imitating the said invention or any part thereof or any machinery made in accordance therewith, and that the said de-
560 fendants may be decreed to pay the costs of this suit, and that your orators may have such other further relief as may be agreeable to equity.

May it please your honors to grant unto your orators the writ of injunction, as well provisional as perpetual, issuing out of and under the seal of this court, commanding, enjoining, and restraining the said defendant, Nichols, Shepard and Company, and its agents, servants, attorneys, workmen and each and every one of them as hereinbefore prayed in that behalf.

May it please your *orators* honors to grant your orators a writ of subpœna, issuing out of and under the seal of this court, directed to said defendant, Nichols, Shepard and Company, commanding it by a certain day, under a certain penalty, to be and appear in this court, then and there to answer the premises and abide such order and decree as may be made against them.

And your orators will every pray, &c.

ELON A. MARSH.
MINARD LAFEVER.

R. A. PARKER,
Solicitor for Complainants and of Counsel.

The defendants are required to answer interrogations 1, 2, 3, & 4.

R. A. PARKER,
Sol'r for Compl'ts.

STATE AND EASTERN DISTRICT OF MICHIGAN, *ss:*

On this 20th day of March, A. D. 1885, before me personally appeared Elon A. Marsh and Minard Lafever, to me known to be the persons subscribing the foregoing bill of complaint, and made oath that they have read the same and know the contents
561 thereof, and that the same is true of their own knowledge except as to those matters stated to be on information and belief, and as to those matters they believe it to be true.

MYRON H. JOY,
United States Commissioner for the Eastern District of Michigan.

Endorsed: 2945. Circuit court of the United States for the eastern district of Michigan. In equity. Elon A. Marsh and Minard Lafever *vs.* Nichols, Shepard & Co. Bill of complaint. Filed March 21st, 1885. Walter S. Harsha, clerk. R. A. Parker, sol'r for compl'ts.

562 THE UNITED STATES OF AMERICA:

The Circuit Court of the United States for the Eastern District of Michigan.

I, Walter S. Harsha, clerk of the circuit court of the United States for the eastern district of Michigan, do hereby certify that the above and foregoing is a true copy of the bill of complaint filed in my office in the case of Elon A. Marsh and Minard Lafever against Nichols, Shepard & Co., No. 2945; that I have compared the same with the original, and it is a true and correct transcript therefrom and of the whole thereof.

In testimony whereof I have hereunto set my hand and affixed the seal of said court, at Detroit, in said district, this 25th [SEAL.] day of March, in the year one thousand eight hundred and eighty-five, and of the Independence of the United States of America the one hundred and ninth.

WALTER S. HARSHA, *Clerk.*

[Endorsed:] Exhibit 19. Jun- 23, 1885. G. Gatrell, official stenographer, Marshall, Mich.

563 THE UNITED STATES OF AMERICA:

No. 308,567.

To all to whom these presents shall come:

Whereas Elon A. Marsh, of Battle Creek, Michigan, has presented to the Commissioner of Patents a petition praying for the grant of letters patent for an alleged new and useful improvement in reversing gear for steam-engines, a description of which invention is contained in the specification of which a copy is hereunto annexed and made a part hereof, and has complied with the various requirements of law in such cases made and provided; and whereas upon due examination made the said claimant is adjudged to be justly entitled to a patent under the law:

Now, therefore, these letters patent are to grant unto the said Elon A. Marsh, his heirs or assigns, for the term of seventeen years from the twenty-fifth day of November, one thousand eight hundred and eighty-four, the exclusive right to make, use, and vend the said invention throughout the United States and territories thereof.

In testimony whereof I have hereunto set my hand and caused the seal of the Patent Office to be affixed, at the city of [L. S.] Washington, this twenty-fifth day of November, in the year of our Lord one thousand eight hundred and eighty-four,

564

(No Model.) 2 Sheets—Sheet 1.

E. A. MARSH.

REVERSING GEAR FOR STEAM ENGINES.

No. 308,567. Patented Nov. 25, 1884.

No. 136.
Marsh et al.
v.
Nichols et al.
p. 564

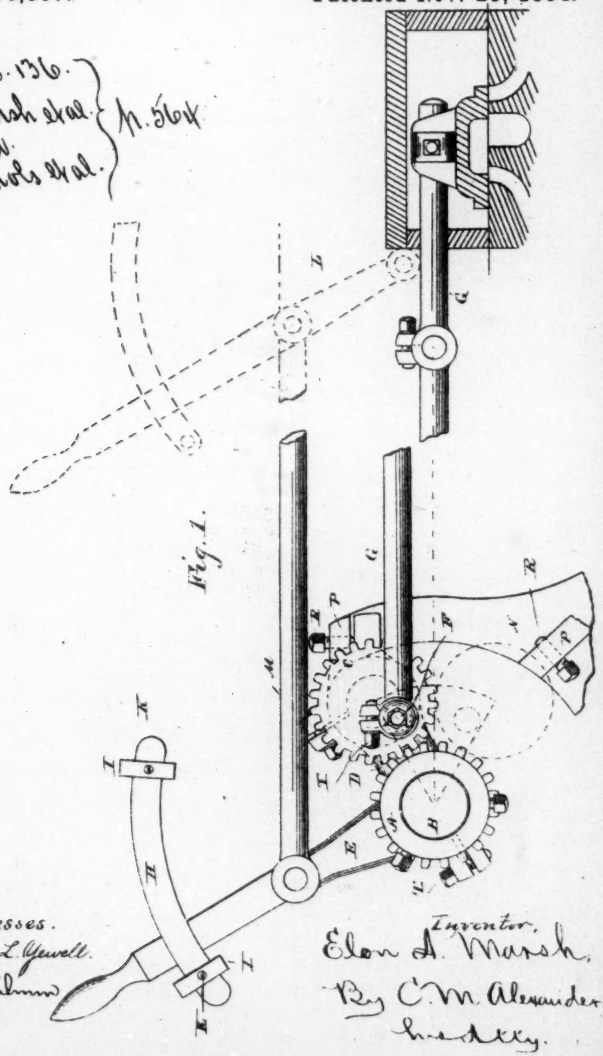

Fig. 1.

Witnesses.
Edwin L. Yewell.
H. A. Toulmin

Inventor,
Elon A. Marsh,
By C. M. Alexander
his Atty.

(No Model.) 2 Sheets—Sheet 2.

E. A. MARSH.

REVERSING GEAR FOR STEAM ENGINES.

No. 308,567. Patented Nov. 25, 1884.

Fig. 2.

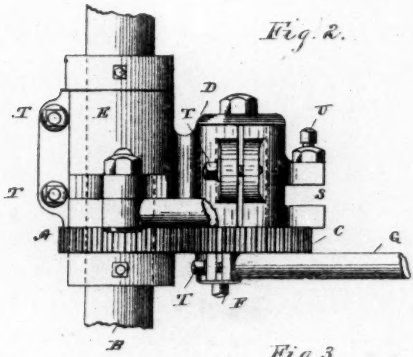

Fig. 3.

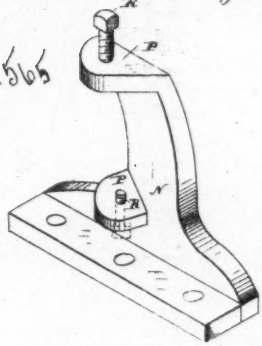

No. 136.
Marsh et al
v.
Nichols et al.
p. 565

Witnesses,
Edwin L. Yewell,
H. A. Toulmin

Inventor,
Elon A. Marsh,
By C. M. Alexander,
his Atty.

and of the Independence of the United States of America the one hundred and ninth.

M. L. JOSLYN,
Acting Secretary of the Interior.

Countersigned:
BENJ. BUTTERWORTH,
Commissioner of Patents.

566 UNITED STATES PATENT OFFICE.

ELON A. MARSH, of Battle Creek, Michigan.

Reversing-Gear for Steam-Engines.

Specification forming part of Letters Patent No. 308,567, dated November 25, 1884. Application filed September 28, 1881. (No model.)

To all whom it may concern:

Be it known that I, Elon A. Marsh, of Battle Creek, in the county of Calhoun, and in the State of Michigan, have invented certain new and useful improvements in reversing-gear for steam-engines; and I do hereby declare that the following is a full, clear, and exact description thereof, reference being had to the accompanying drawings, and to the letters of reference marked thereon, making a part of this specification.

This invention relates to certain improvements upon reversing-gear for steam-engines for which letters patent were granted to me December 28, 1880, No. 236,052; and it has for its objects to provide certain means for limiting the movement of the actuating-lever by means of adjustable stops, whereby the throw of the reversing-lever and the amount of lead to be given to the valve may be regulated with precision, as more fully hereinafter specified. These objects I attain by the apparatus and mechanism illustrated in the accompanying drawings, in which—

(Here follow diagrams marked pp. 564 & 565.)

Figure 1 represents a side elevation of my improved reversing-gear; Fig. 2, a top view of the gear with the valve and valve-chest omitted, and Fig. 3 a perspective view of a standard provided with the adjustable stops for limiting the movement of the reversing-lever.

The letter A indicates a cog-wheel mounted on the main shaft or driving-wheel shaft B of the engine, and C indicates a similar cog-wheel of equal diameter with the wheel A, mounted on a suitable journal on the arm D of the angle-lever E, by means of which the reversing gear is shifted. The two wheels intermesh, and the lever E is mounted on the driving-shaft, the said shaft forming a fulcrum, so that the lever may be partially turned thereon, so as to shift the

wheel C. The said wheel C is provided with a wrist-pin, F, to which the valve-rod G is secured at one end.

The letter H indicates a segmental guide for the handle of the lever, which is provided with adjustable stops I, which are secured to it by means of set-screws K in any desired position to limit the movement of the lever as may be required.

In some instances it is found inconvenient to operate the lever directly, as above described, and in such cases an auxiliary lever, L, may be employed, as indicated by the dotted lines in Fig. 1, which is connected to the lever E by means of a rod, M. In the last-mentioned case it is found preferable to arrange the adjustable stops on an independent standard, N, rigidly secured to the engine-bed, boiler, or other rigid support. The said stops in this instance are preferably formed by means of the stationary lugs P, having adjustable set-screws R, and the arm D of the lever E is slotted, as indicated by the letter S, so as to embrace the sides of the standard N and prevent lateral play of the lever. It will thus be perceived that the movement of the lever is limited laterally as well as in the direction of its oscillation, thus securing the utmost precision in the operation of the reversing-gear.

To compensate for the effects of wear, the bearings of the lever and the journal of the wheel C are divided on one side, and are held together by means of clamping-screws T, by means of which they may be tightened whenever they become loose.

One of the jaws of the slotted arm of the lever E is provided with a set-screw, U, by means of which the said arm may be adjusted to closely embrace the standard N and take up wear.

The operation of the reversing-gear in the present instance is substantially the same as that described in my former patent above mentioned; therefore it is not deemed necessary to more fully describe it in the present case.

Having thus described my invention, what I claim, and desire to secure by letters patent, is—

1. In a reversing-gear for steam-engines, the combination of a pivoted arm for carrying the reversing wheel, a valve-rod, a reach-rod operatively connected with the pivoted arm, a lever for actuating the pivoted arm through the reach-rod, and suitable stops, against one or the other of which the pivoted arm abuts when thrown from one position to the other, substantially as and for the purposes set forth.

567 & 568 2. In combination with the lever, the gear-wheels, and the valve rod, the segmental guide and adjustable stops, substantially as and for the purposes specified.

3. In combination with the lever carrying the reversing-wheel and slotted at its extremity, the standard, and adjustable stops, the whole arranged to operate together substantially as specified.

4. In a reversing-gear for steam-engines, the two gears of equal diameters, mounted one on the main engine-shaft and the other upon a lever adjustable around said shaft as a center, and carrying crank-wrist, to which the valve-rod is connected, in combination with stops limiting the throw of said lever.

Exhibit 22
June 24 1885
Ct C Carther
Stenographer

Fig. 1

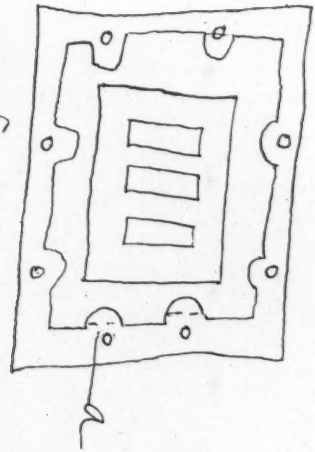

No. 136.
Mank et al.
v.
Nicholson et al.
p. 568

Fig. 2

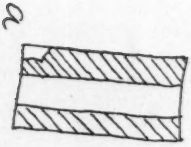

In testimony whereof I affix my signature, in presence of two witnesses, this 6th day of September, 1881.

E. A. MARSH.

Witnesses:
A. H. BRIGGS.
D. C. SIMONS.

[Endorsed:] Exhibit 21. Jun- 24, 1885. G. Gatrell, official stenographer, Marshall, Mich.

(Here follows diagram marked p. 569.)

573 UNITED STATES PATENT OFFICE.

ANDREW J. HOAG, of Battle Creek, Michigan, assignor to NICHOLS, SHEPARD & CO., of same place.

Reversing-Gear for Steam-Engines.

Specification forming part of Letters Patent No. 244,807, dated July 26, 1881. Application filed June 9, 1881. (No model.)

To all whom it may concern:

Be it known that I, Andrew J. Hoag, of Battle Creek, county of Calhoun, State of Michigan, have invented certain new and useful improvements in reversing-gear for steam-engines, of which the following is a full and exact description, reference being had to the accompanying drawings, making part of this specification, in which—

Figure 1 is a perspective view of so much of a traction-engine as is necessary to show my improvement applied. Fig. 2 is a side elevation showing the main engine-shaft in section with the reversing gear and lever in working relation to the adjustable stops. Fig. 3 is a plan or top view of the same, and Fig. 4 is a perspective view of the stop-plate detached.

My invention relates to a novel arrangement of reversing-gear and its actuating-lever in connection with adjustable stops for regulating with precision the throw of the reversing-lever and the amount of lead to be given to the steam, as hereinafter explained.

The engine in its organization and arrangement of parts may be similar to those now in use, and it need not, therefore, be described, in detail, further than is necessary to an understanding of my improvements.

The form of reversing-gear shown is similar to that described in letters patent granted to Elon A. Marsh, December 28, 1880, No. 236,052, consisting of two gears of equal diameter—one mounted upon the main engine-shaft and rotating therewith, and the other gearing therewith upon a short parallel shaft upon an arm of a lever adjustable upon the main engine-shaft as a center, the last-named gear carrying the crank-pin to which the valve-rod is connected. My improvement thereon will be best understood from the following description with reference to the drawings, in which—

(Here follow diagrams marked pp. 570–572.)

A represents the main engine-shaft, and B a spur-gear mounted thereon and keyed or otherwise secured to said shaft, so as to rotate with it.

C is a lever-plate journaled upon the shaft A by means of a sleeve, C′, surrounding said shaft, and provided with an arm, C^2, the outer end of which has a suitable bearing for a short shaft, carrying a second spur-gear, B′, or upon which said gear is mounted. The gear B′ is of the same diameter as gear B, and engaging with and being actuated by said gear, is consequently rotated in the same time, at the same rate of speed, as the gear B, but in the reverse direction. The lever-plate has a rod, D, connected with it, which extends rearward to and is connected with a lever, D′, arranged within convenient reach of the attendant, said lever engaging by means of a thumb-latch with a rack-segment for holding it at any desired adjustment. The elasticity of this rod D has been found to render it unreliable in determining the adjustment of the gear B′ relative to the gear B, and the amount of lead given with the precision required; and to obviate this difficulty I provide the lever-plate C with a pendant third arm, C^3, formed in one piece with said plate, and moving between adjustable stops in a plate or bracket, G, secured to the boiler or other suitable point of support underneath the shaft A, as shown. This plate or bracket is curved on its upper face, or has arms projecting upward from it provided at their upper or outer ends with laterally-projecting spurs or ears *g g′*, in which the adjustable stops are secured, said stops consisting in the present instance of headed screws *h h′*, by the adjustment of which the throw of the arm C^3 and of the lever-plate C, of which it forms a part, is determined with entire precision, and is not left dependent upon the degree of rigidity of the connecting-rod referred to. By the adjustment of the stops *h h′* the throw of the lever-plate and of the valve rod crank-wrist connected therewith may be varied for regulating or adjusting the lead, as described.

The operation of the gear in reversing the engine is the same as that described in the Marsh patent referred to, and therefore need not be here described.

Having now described my invention, I claim—

The combination, with the valve-rod and the lever carrying the crank-wrist, of the rod and lever for actuating said lever, and the arm and adjustable stops for regulating its throw, substantially as and for the purpose described.

ANDREW J. HOAG.

Witnesses:

FRANK W. DUNNING.

GEO. F. BARROW.

(No Model.) 2 Sheets—Sheet 1.

A. J. HOAG.

REVERSING GEAR FOR STEAM ENGINES.

No. 244,807. Patented July 26, 1881.

No. 136 Marsh et al. v Nichols et al. } p. 570

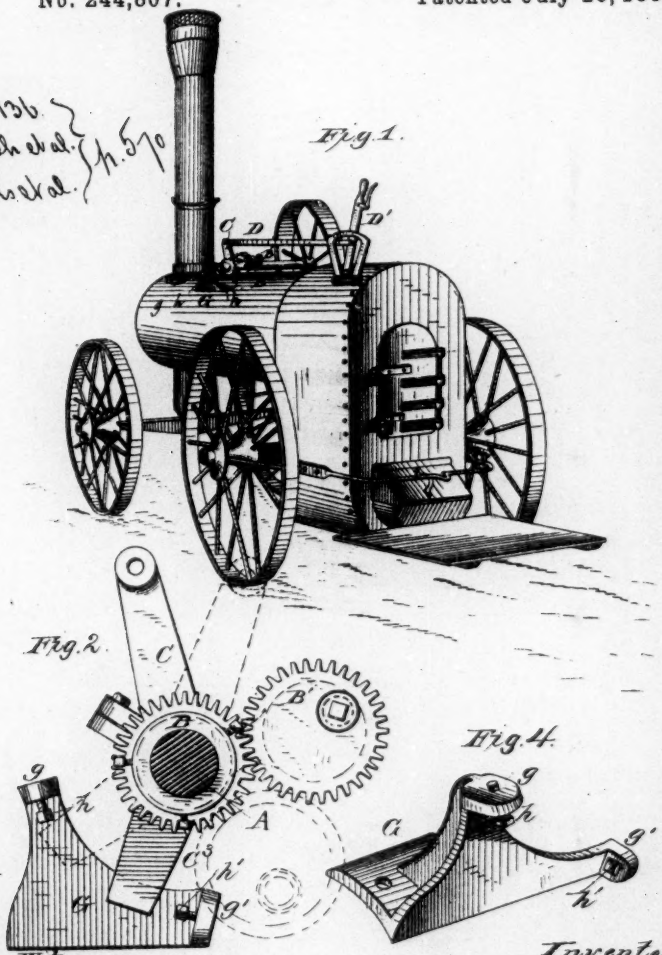

Witnesses
Franck L. Ourand
W. E. Chaffee

Inventor
Andrew J. Hoag
by Mill, Smith & Co
Attorneys

(No Model.) 2 Sheets—Sheet 2.

A. J. HOAG.

REVERSING GEAR FOR STEAM ENGINES.

No. 244,807. Patented July 26, 1881.

Fig. 3.

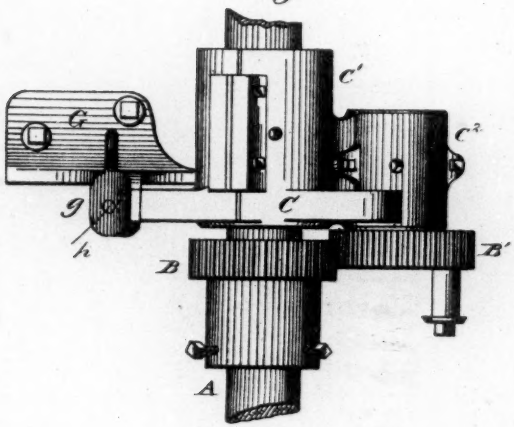

No. 136.
Marsh et al.
v
Nichols et al.
p. 572

Witnesses.
Franck L. Ourand
W. O. Shaffer

Inventor.
Andrew J. Hoag.
by A. M. Smith & Co.
Attorneys

574 48TH CONGRESS, 1st Session. } HOUSE OF REPRESENTATIVES. { REPORT No. 834.

ELON A. MARSH and MINARD LAFEVER.

March 18, 1884.—Committed to the Committee of the Whole House and ordered to be printed.

Mr. Atkinson, from the Committee on Patents, submitted the following report (to accompany bill H. R. 2298).

The Committee on Patents, to whom was referred the bill (H. R. 2298) for the relief of Elon A. Marsh and Minard Lafever, having had the same under consideration, beg leave to submit the following report:

On the 28th day of December, 1880, letters patent of the United States, No. 236,052, were issued to Elon A. Marsh and his assignee, Minard Lafever, of Battle Creek, Mich. Subsequently, during a suit for infringement, this patent was put in evidence as an exhibit, and it was then discovered that the said letters patent No. 236,052 had never been signed by the Secretary of the Interior, as by law required. The patent was thereupon returned to the Commissioner of Patents, and attention was called to the omission of the Secretary's signature. The patent was then presented to acting Secretary of the Interior Alonzo Bell, who affixed his signature thereto, and it was returned to the patentee's solicitor on the 24th day of February, 1882. A letter from E. M. Marble, Commissioner of Patents, to the patentee's solicitor, dated April 28, 1882, states that letters patent No. 236,052 were duly applied for and granted and the fees paid; that the case was placed in the weekly issue of patents of December 25, 1880, and duly entered in the alphabetical list of patentees; that the specifications and drawings were duly printed and published, the patent regularly prepared and presented to the Commissioner of Patents and the acting Secretary of the Interior for signature; that the said letters patent, supposed to be complete in every respect, were mailed to the patentee; that the patent was returned to the office February 23, 1883, and attention called to the fact that the signature of Mr. Bell, who signed the patents issued December 28, 1880, as acting Secretary of the Interior, had been omitted. They were presented to Mr. Bell, who affixed his signature to the letters patents, which were returned to the patentee's solicitor, and that the omission of the signature was purely accidental, and probably resulted from their being inadvertently laid aside or withdrawn from before the acting Secretary while he was in the act of signing.

It appears that the letters patent were recorded in the Patent Office at the time of issuing said patent, to wit, December 28, 1880, and thus constructive notice was given to all persons interested in the subject-matter of said patent.

It further appears that the parties who resisted the passage of this bill before the committee had actual notice of the application
575 of Marsh for a patent, and had seen the patented device in use by the inventor at about the time said patent was applied for.

On the 5th day of March, 1883, this patent, No. 236,052, was held invalid by Judge Brown, of the United States court, eastern district of Michigan, on the theory that a patent accidentally issued without the signature of the Secretary of the Interior is a nullity, and that a subsequent signing of the patent by the Secretary of the Interior does not cure the defect or give the patent force.

In view of the foregoing facts, and believing that a great injustice would be done the inventor and his assignee if their rights were permitted to be impaired by the accidental omission of the signature of the Secretary of the Interior, your committee report in favor of a bill that will secure to the inventor and his assignee all the rights and equities that the Interior Department contemplated for the patentee when it issued said letters patent. They therefore recommend the passage of the bill (H. R. 2298) which validates said letters patent.

DEPARTMENT OF THE INTERIOR,
UNITED STATES PATENT OFFICE,
WASHINGTON, D. C., *April* 28, 1882.

SIR: In the matter of the letters patent granted to Elon A. Marsh and Minard Lafever, upon the application of said Elon A. Marsh, December 28, 1880, for an improvement in "steam-engine valve gear," concerning the issuance of which you ask, in your communication of the 18th instant, to be furnished with certain information under the seal of the office, you are informed that the files and records of this office show as follows:

1. That the application of Elon A. Marsh, of Battle Creek, Calhoun county, Michigan, for letters patent for improvement in "steam-engine valve gear," accompanied by the first Government fee, $15, was received in this office May 3, 1880, and numbered 8877, series of 1880.

2. That the first action by the examiner was May 24, 1880, and the last November 19, 1880, allowing the case.

3. That notice of said allowance, as provided by section 4885 Revised Statutes, was mailed November 22, 1880, to "Elon A. Marsh, ass'or, care Alexander & Mason, asso., present." Copy attached, marked A.

4. That the final Government fee, $20, was paid December 9, 1880, by Messrs. Alexander & Mason, the attorneys in the case, with instructions to send the letters patent to Marsh and Lafever, Battle Creek, Mich.

5. That the case was placed in the weekly issue of patents December 25, 1880, numbered 236,052, and duly entered in the "Alphabetical List of Patentees, vol. 2, 1880," on page 13, in the words and figures as follows:

No. 236,052; patentee, Elon A. Marsh, ass'or; invention, steam-engine; date of patent, December 28; one-half to Minard Lafever; valve gear.

6. That the weekly issue of patents issued December 28, 1880, consisted of letters patent numbered consecutively from 235,844 to 236,136, both inclusive, none of which save 235,865, 235,873, and

235,987 were withdrawn from the issue after it was originally made up, as appears from memoranda of withdrawals preserved in the office.

7. That the specification and drawings of said letters patent were duly printed and published under the provision of section 490, Revised Statutes, as part of the issue of December 28, 1880, as letters patent No. 236,052 of this date. (See pages 1232 and 340, drawings, monthly volume "Specifications and Drawings of Patents, United States Patent Office, December, 1880. Certified copies.")

8. That the grant of said letters patent were regularly and completely prepared, presented to the Commissioner of Patents and acting Secretary of the Interior for signature, and the seal of the Patent Office affixed, as appears by the record thereof, under No. 236,052 in "No. 361," "heads of patents," "Patent Office," "December 21, 1880, to January 11, 1881."

9. That said letters patent, supposed to be complete in every respect, were mailed December 28, 1880, addressed to Messrs. Marsh and Lafever, Battle Creek, Mich. For record thereof see Alphabetical List of Patentees, vol. 2, 1880, page 13.

But it appears that said letters patent were returned to this office February 23, 1882, by Mr. R. A. Parker and Mr. E. A. Marsh, and attention called to the fact that the signature of Hon. A. Bell,
576 who signed the patents issued December 28, 1880, as acting Secretary of Interior, had been omitted therefrom. They were presented to Mr. Bell (still in office), who affixed his signature, and the letters patent were returned, February 24, 1882, to "Mr. R. A. Parker, Bank block, Detroit, Mich."

The omission of the signature of the acting Secretary, which escaped notice when the letters patent were issued and mailed, was, as established by the history and record of the case given above, evidently purely accidental, and might easily have resulted—probably did result—from their being inadvertently laid aside or withdrawn from before the acting Secretary while he was in the act of signing.

All letters patent are issued on Tuesday. On Tuesday morning of each week the whole issue of that date, after being carefully revised and numerically arranged, are presented in one lot to the Commissioner of Patents for his signature. The seal of the Patent Office is then affixed, and they are then laid before the Secretary of the Interior for signature, and then returned in one lot to the issue and Gazette division of the Patent Office for delivery.

The evidence is conclusive that this patent was duly and properly prepared; that it was forwarded with the other patents of that date to the Commissioner of Patents for his signature, which it received; that the seal of the Patent Office was duly affixed, and that it was returned to the issue division of the Patent Office from the Secretary's office with the other patents, as signed, and mailed as a patent duly issued.

In all respects, save in the matter of the omission of the signature of the acting Secretary of the Interior, which was dicovered by the return of the letters patent to this office February 23, 1882, the records and files and all the evidence obtainable in the Patent Office

show that letters patent No. 236,052 were duly and regularly issued, upon the application of Elon A. Marsh, to Elon A. Marsh, inventor, and Minard Lafever, assignee of one-half interest, December 28, 1880, for an improvement in steam-engine valve gear.

Very respectfully, E. M. MARBLE,
Commissioner of Patents.

Mr. C. M. Alexander, of counsel for Elon A. Marsh, present.

Ex'd: H. M. H; G. W.

[Endorsed:] Exhibit 26. Jun- 24, 1885. G. Gatrell, official stenographer, Marshall, Mich.

577 EXHIBIT 27. Jun- 24, 1885. G. Gatrell, Official Stenographer, Marshall, Mich.

2–175.

21134.

DEPARTMENT OF THE INTERIOR,
UNITED STATES PATENT OFFICE.

To all persons to whom these presents shall come, Greeting:

This is to certify that the annexed is a true copy from the records of this office of an instrument of writing executed by E. A. Marsh and Minard Lafever March 5, 1881, recorded in Liber N 26, page 193. Said record has been carefully compared with the original, and is a correct transcript thereof.

In testimony whereof I, R. G. Dyrenforth, acting Commissioner of Patents, have caused the seal of the Patent Office to be affixed this 11th day of October, in the year of our Lord one thousand eight hundred and eighty-four, and of the Independence of the United States the one hundred and ninth.

R. G. DYRENFORTH,
Acting Commissioner.

578 Liber N 26, p. 193.

Know all men by these presents that we, Elon A. Marsh and Minard Lafever, both of the city of Battle Creek, in the county of Calhoun and the State of Michigan, parties of the first part, for and in consideration of the sum of five thousand dollars, lawful money of the United States, to us in hand paid, the receipt whereof is hereby acknowledged by James Scott, of the city of Battle Creek, county of Calhoun, and State of Michigan, do hereby sell, assign, transfer, and set over unto the said party of the second part an equal undivided one-third ($\frac{1}{3}$) interest in and to the letters patent issued to the said parties of the first part, and bearing date December 28, 1880, and numbered 236,052, and named and described in said letters patent as steam-engine valve gear, this deed or assignment being intended to convey to the said party of the second part one equal undivided

one-third interest in and to said invention and said letters patent and all the advantages to be derived therefrom, together with all improvements to be hereafter made thereon.

In witness whereof the said parties of the first part have hereunto set their hands and seals this fifth day of March, A. D. 1881.

E. A. MARSH. [L. S.]
MINARD LAFEVER. [L. S.]

In presence of—
N. H. BRIGGS.
O. S. CLARK.

STATE OF MICHIGAN, } ss:
County of Calhoun, }

On this fifth day of March, one thousand eight hundred and
579 eighty-one, before me, Nathan H. Briggs, a notary public in and for said county, personally came the above-named Elon A. Marsh and Minard Lafever, known to me to be the persons who executed the foregoing instrument, and acknowledged the same to be their free act and deed.

NATHAN H. BRIGGS,
Notary Public in and for Calhoun Co., Mich.

STATE OF MICHIGAN:

CALHOUN COUNTY CLERK'S OFFICE.

I, William F. Neale, clerk of said county and of the circuit court thereof, the same being a court of record, having its seal, do hereby certify that Nathan H. Briggs, Esq., before whom the annexed instrument was proven or acknowledged, was at that date, March 5th, 1881, a notary public in and for said county and duly authorized by law to take the same; that I am well acquainted with his handwriting and verily believe the signature thereto is genuine. I further certify that said instrument is executed and acknowledged according to the laws of this State.

In testimony whereof I have hereunto set my hand and affixed the seal of the circuit court of said county, at the city of Marshall, this fifth day of March, 1881.

[Seal of the Circuit Court of Calhoun Co., Michigan.]

WILLIAM F. NEALE, *Clerk.*

Recorded Mar. 18, 1881.
Ex'd: J. A. N. M. M. K.

[Endorsed:] 21134. D'ht.]

580 2–175.

21134.

DEPARTMENT OF THE INTERIOR,
UNITED STATES PATENT OFFICE.

To all persons to whom these presents shall come, Greeting:

This is to certify that the annexed is a true copy from the records

of this office of an instrument of writing executed by E. A. Marsh, M. Lafever, and James Scott, March 5th, 1881, recorded in Liber K 26, page 244. Said record has been carefully compared with the original, and is a correct transcript thereof.

In testimony whereof I, R. G. Dyrenforth, acting Commissioner of Patents, have caused the seal of the Patent Office to be affixed this 11th day of October, in the year of our Lord one thousand eight hundred and eighty-four, and of the Independence of the United States the one hundred and ninth.

[SEAL.] R. G. DYRENFORTH,
Acting Commissioner.

581 Liber K 26, p. 244.

Articles of agreement, made and entered into this fifth day of March, A. D. 1881, by and between Elon A. Marsh, Minard Lafever, and James Scott, all of the city of Battle Creek, county of Calhoun and State of Michigan, witnesseth as follows:

Whereas the said parties hereto are each the owner of an equal undivided one-third ($\frac{1}{3}$) interest in the invention and letters patent bearing date December 28, 1880, and numbered 236,052, for a steam-engine valve gear, said letters patent being issued to the said Elon A. Marsh and Minard Lafever, it is therefore mutually agreed and understood by and between the parties hereto that neither of said parties shall at any time hereafter sell, assign, transfer, mortgage, hypothecate, or in any manner dispose of his said interest in said invention and said letters patent without first having secured the written consent of the other parties to such sale, assignment, or transfer, mortgage, or hypothecation or disposition of his said interest.

In witness whereof the said parties hereto have hereunto set their hands and seals the day and year first above written.

E. A. MARSH. [SEAL.]
M. LAFEVER. [SEAL.]
JAMES SCOTT. [SEAL.]

In presence of—
N. H. BRIGGS.
O. S. CLARK.

Recorded Mar. 28, 1881.
Ex'd: H. M. H.; E. A. M.

[Endorsed:] 21134. D., '84.

582 2–175.

19274.

DEPARTMENT OF THE INTERIOR,
UNITED STATES PATENT OFFICE.

To all persons to whom these presents shall come, Greeting:

This is to certify that the annexed is a true copy from the files of this office of the specification and drawing in the matter of the ap-

plication of Elon A. Marsh, filed September 28, 1881, for improvement in reversing gear for steam-engines.

In testimony whereof I, R. G. Dyrenforth, acting Commissioner of Patents, have caused the seal of the Patent Office to be affixed this 15th day of September, in the year of our Lord one thousand eight hundred and eighty-four, and of the Independence of the United States the one hundred and ninth.

[SEAL.] R. G. DYRENFORTH,
Acting Commissioner.

583 *Specification Forming Part of the Application Filed September 28, 1881, by Elon A. Marsh for Reversing Gear for Steam-Engines.*

To all whom it may concern:

Be it known that I, Elon A. Marsh, of Battle Creek, in the county of Calhoun, and in the State of Michigan, have invented certain new and useful improvements in reversing gear for steam-engines, and do hereby declare that the following is a full, clear, and exact description thereof, reference being had to the accompanying drawings and to the letters of reference marked thereon, making a part of this specification.

This invention relates to certain improvements upon reversing gear for steam-engines for which letters patent were granted to me December 28, 1880, No. 236,052, and it has for its objects to provide certain means for limiting the movement of the actuating lever by means of adjustable stops, whereby the throw of the reversing lever and the amount of lead to be given to the *steam* may be regulated with precision, as more fully hereinafter specified.

These objects I attain by the apparatus and mechanism illustrated in the accompanying drawings, in which figure 1 represents a side elevation of my improved reversing gear; figure 2, a top view of the gear with the valve and valve chest omitted, and figure 3 a perspective view of a standard provided with the adjustable stops for limiting the movement of the reversing lever.

The letter A indicates a cog-wheel mounted on the main shaft or driving-wheel shaft B of the engine, and C indicates a similar cog-wheel of equal diameter with the wheel A, mounted on a suitable journal on the arm D of the angle lever E, by means of which the reversing gear is shifted. The two wheels intermesh, and the lever E is mounted on the driving shaft, the said shaft
584 forming a fulcrum, so that the lever may be partially turned thereon so as to shift the wheel C. The said wheel C is provided with a wrist pin, F, to which the valve rod is secured at one end. The letter H indicates a segmental guide for the handle of the lever, which is provided with adjustable stops I, which are secured to it by means of set-screws K in any desired position to limit the movement of the lever as may be required.

In some instances it is found inconvenient to operate the lever directly as above described, and in such cases an auxiliary lever, L, may be employed, as indicated by the dotted lines in figure 1,

which is connected to the lever E by means of a rod, M. In the last-mentioned case it is found preferable to arrange the adjustable stops on an independent standard, N, rigidly secured to the engine bed, boiler, or other rigid support. The said stops in this instance are preferably formed by means of the stationary lugs P, having adjustable set-screws R, and the arm D of the lever E is slotted, as indicated by the letter S, so as to embrace the sides of the standard N and prevent lateral play of the lever. It will thus be perceived that the movement of the lever is limited laterally as well as in the direction of its oscillation, thus securing the utmost precision in the operation of the reversing gear.

To compensate for the effects of wear the bearings of the journal and the lever of the wheel C are divided on one side and are held together by means of clamping screws T, by means of which they may be tightened whenever they become loose.

585 One of the jaws of the slotted arm of the lever E is provided with a set-screw, by means of which the said arm may be adjusted to closely embrace the standard N and take up wear.

The operation of the reversing gear in the present instance is substantially the same as that described in my former patent, above mentioned; therefore it is not deemed necessary to more fully describe it in the present case.

Having thus described my invention, what I claim and desire to secure by letters patent is—

1st. In a reversing gear for steam-engines, the combination of a pivoted arm for carrying the reversing wheel, a valve rod, a reach rod operatively connected with the pivoted arm a lever for actuating the pivoted arm through the reach rod and suitable stops, against one or the other of which the pivoted arm abuts when thrown from one position to the other, substantially as and for the purposes set forth.

2d. In combination with the lever, the gear wheels, and the valve rod, the segmental guide and adjustable stops, substantially as and for the purposes specified.

3d. In combination with the lever carrying the reversing wheel and slotted at its extremity, the standard and adjustable stops, the whole arranged to operate together substantially as specified.

4th. In a reversing gear for steam-engines, the two gears, of equal diameters, mounted one on the main engine shaft and the other upon a lever adjustable around said shaft as a center and carrying a crank wrist to which the valve rod is connected, in combination with stops limiting the throw of said lever.

586 In testimony whereof I affix my signature in presence of two witnesses this 6th day of September, 1881.

E. A. MARSH.

Witnesses:

A. H. BRIGGS.
D. C. SIMONS.

[Endorsed:] 19274. D., '84.

(No Model.) 2 Sheets—Sheet 1.

E. A. MARSH.

REVERSING GEAR FOR STEAM ENGINES.

No. 308,567. Patented Nov. 25, 1884.

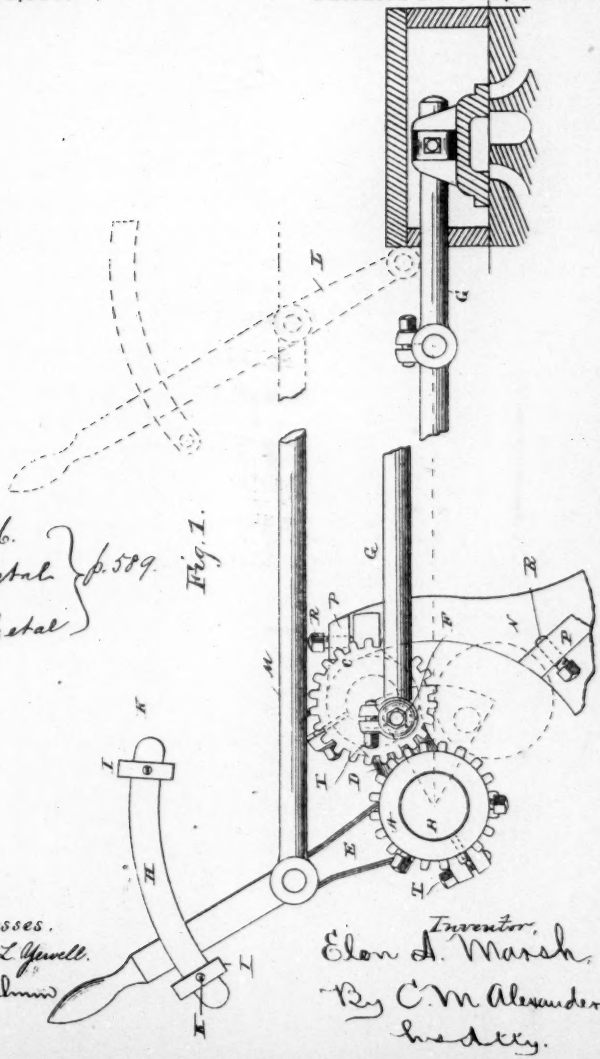

No. 136. Marsh et al } p. 589. Nichols et al

Fig. 1.

Witnesses.
Edwin L. Yewell.
H. A. Toulmin

Inventor.
Elon A. Marsh.
By C. M. Alexander,
his Atty.

590

(No Model.) 2 Sheets—Sheet 2.

E. A. MARSH.

REVERSING GEAR FOR STEAM ENGINES.

No. 308,567. Patented Nov. 25, 1884.

Fig. 2.

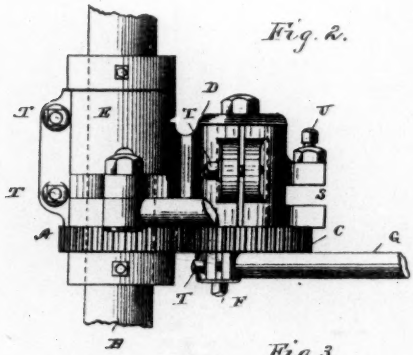

Fig. 3.

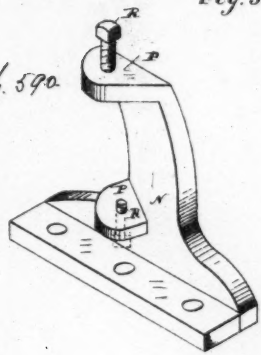

No. 136
Marsh et al
Nichols et al
} p. 590

Witnesses,
Edwin L. Yewell,
H. A. Goulmine

Inventor,
Elon A. Marsh,
By C. M. Alexander,
his Atty.

587 C. Jan. 9, '82.

Room No. —. 2–061. Interference.

All communications should be addressed to the Commissioner of Patents, Washington, D. C.

{ U. S. Patent Office, Jan. 14, 1882. }
{ Ex'r of interferences. }

DEPARTMENT OF THE INTERIOR,
UNITED STATES PATENT OFFICE,
WASHINGTON, D. C., *Jan. 9th*, 1882.

Elon A. Marsh, care Martin Metcalf, Washington, D.C.:

Please find below a copy of a communication from the examiner concerning your application filed Sept. 28, 1881, No. 42790, for an improvement in reversing gear for steam-engines.

Very respectfully, V. D. STOCKBRIDGE,
Act'g Commissioner of Patents.

Room No. 38.

Your case above referred to is adjudged to interfere with others hereafter specified, and the question of priority will be determined in conformity with the rules.

The statement demanded by rule 105 must be sealed up and filed on or before the 16 day of Feb'y, 1882, with the subject of the invention and name of party filing it indorsed on the envelope. The subject-matter of — involved in the interference is—

1st. The combination, with the valve rod and lever carrying the reversing wheel, of the rod and lever for actuating said lever, and the arm or standard, and adjustable stops for regulating the throw of the lever, substantially as specified.

2d. In combination with the lever, the gear wheels, and the valve rod, the segmental guide, and adjustable stops, substantially as and for the purposes specified.

588 4th. In a reversing gear for steam-engines, the two gears, of equal diameters, mounted one on the main-engine shaft and the other upon a lever adjustable around said shaft as a center, and carrying crank wrist to which the valve rod is connected, in combination with stops limiting the throw of said lever—

Being the 1st, 2d, and 4th claims of the application and substantially 1st, 2d, and 3d claims of patent.

The interfering patent is that of Andrew J. Hoag, Battle Creek, Mich., assignor to Nichols, Shepard & Co., of same place, reissue No. 9951, Nov. 29, '81; filed Nov. 7, '81; original patent No. 244,807, July 26, '81; filed June 9, '81; Addison M. Smith, Washington, D. C., att'y.

F. FOSTER, *Ex.*

[Endorsed:] 19274. D., '84. 6–$1\frac{4}{7}\frac{4}{4}$. Int. Jun- 9, '82.

(Here follow diagrams marked pages 589 and 590.)

591 2–175.

19274.

DEPARTMENT OF THE INTERIOR,
UNITED STATES PATENT OFFICE.

To all persons to whom these presents shall come, Greeting:

This is to certify that the annexed is a true copy from the files of this office of the preliminary statement of Elon A. Marsh, filed January 4, 1882, in the matter of the interference — Marsh *vs.* Hoag, for improvement in steam-engines.

In testimony whereof I, R. G. Dyrenforth, acting Commissioner of Patents, have caused the seal of the Patent Office [SEAL.] to be affixed this 15th day of September, in the year of our Lord one thousand eight hundred and eighty four, and of the Independence of the United States the one hundred and ninth.

R. G. DYRENFORTH,
Acting Commissioner.

592 Statement under oath of Elon A. Marsh, of the city of Battle Creek, Calhoun county, Michigan, in relation to the dates of the conception and history of his improvement in reversing gear for steam-engines, for which application for a patent was filed Sept. 28, 1881, No. 42990, which has been adjudged to interfere with a patent granted to one Andrew J. Hoag, of the same place, reissued No. 9951, Nov. 29, 1881; filed Nov. 7, 1881; original patent No 244,807, July 26th, 1881; filed June 9th, 1881.

I first conceived the invention involved in this interference in the month of December, 1879, and communicated the same to others during the month and the early months of the year 1880, and I completed the invention as early as the first day of March, 1880, by applying the same to a working model of Marsh's patent valve gear on a steam-engine, which said engine, with the said improvement attached thereto, has been in successful operation, without change or alteration, from the date last above mentioned to the present time.

ELON A. MARSH.

Subscribed and sworn to before me this 29th day of December, A. D. 1881.

[SEAL.] HENRY H. HUBBARD,
Notary Public.

Ex'd: A. H.

[Endorsed:] 19274. D., '84. Marsh *vs.* Hoag. Statement of Marsh. Filed Jan. 4, 1882; approved as amended M'ch 4, 1882. In interference, Hoag *v.* Marsh. Marsh's preliminary statement.

593 2–175.

19274.

DEPARTMENT OF THE INTERIOR,
UNITED STATES PATENT OFFICE.

To all persons to whom these presents shall come, Greeting:

This is to certify that the annexed is a true copy from the files of this office of the declaration of interference, dated March 6, 1882, in the matter of the interference — Marsh *vs.* Hoag, for improvement in steam-engines.

In testimony whereof I, R. G. Dyrenforth, acting Commissioner of Patents, have caused the seal of the Patent Office to be [SEAL.] affixed this 15th day of September, in the year of our Lord one thousand eight hundred and eighty-four, and of the Independence of the United States the one hundred and ninth.

R. G. DYRENFORTH,
Acting Commissioner.

594 Room No. —. 349.

DEPARTMENT OF THE INTERIOR,
UNITED STATES PATENT OFFICE,
WASHINGTON, D. C., *M'ch* 6, 1882.

In Re Interference.

Before the examiner of interferences.

MARSH
vs.
HOAG.

Subject-matter, steam-engines.

Elon A. Marsh, care C. M. Alexander, Washington, D. C.; Andrew J. Hoag, care A. M. Smith, Washington, D. C.:

The parties hereinafter named are hereby notified that as to their inventions, adjudged to interfere with each other in the particulars specified in office letter of the 9th of Jan., '82, a hearing will be granted on the 1st day of June, 1882.

The testimony of the respected parties must be closed previous to the dates hereinafter designated. The party first filing an application for a patent will be deemed the first inventor, in the absence of proof to the contrary.

Rebutting testimony, but no other, may be taken by parties on whom rest the burden of proof, after the closing of the testimony of the party who first filed his application.

All testimony must be taken, forwarded, and printed in accordance with the published rules of practice of the office.

595 Elon A. Marsh, of Battle Creek, Mich.
Filed application Sept. 28, '81.

Testimony in chief must be closed Apr. 6, '82.
Attorney of record, C. M. Alexander, of Wash'n, D. C.; associate, M. Metcalf, of Wash'n, D. C.
A. J. Hoag, of Battle Creek, Mich., No. 9951.
Filed application Nov. 7, '81, for reissue; granted Nov. 29, '81.
Testimony must be closed Apr. 26, '82.
Attorney of record, A. M. Smith, of Washington, D. C.
Mc'h 6, '82. 8251.
Filed application, ——.
Testimony must be closed, ——.
Attorney of record, —— ——.
Filed application, ——.
Testimony must be closed, ——.
Attorney of record, —— ——.
Rebutting testimony by Marsh must be closed May 11, '82.
19274. D., '84.
Ex'd: H. M. H; E. A. M.

J. B. CHURCH, *Ex.*

596 2–175.

19070.

DEPARTMENT OF THE INTERIOR,
UNITED STATES PATENT OFFICE.

To all persons to whom these presents shall come, Greeting:

This is to certify that the annexed is a true copy from the records of this office of the decision of the Commissioner September 5th, 1884, in the matter of the interference — Marsh *vs.* Hoag, for improvements in reversing gear for steam-engines.

In testimony whereof I, R. G. Dyrenforth, acting Commissioner of Patents, have caused the seal of the Patent Office to be affixed this 11th day of September, in the year of our Lord one thousand eight hundred and eighty-four, and of the Independence of the United States the one hundred and ninth.

[SEAL.]

R. G. DYRENFORTH,
Act'g Commissioner.

597 United States Patent Office.

MARSH
vs.
HOAG.

Reversing Gear for Steam-Engines.

Application of Marsh filed Sept. 28, 1881.
Reissued patent of Hoag, No. 9951, granted Nov. 29, 1881.
Mr. V. D. Stockbridge for Marsh, Mr. Alex. Mahon for Hoag.

In this case the evidence is flatly contradictory, and it is impossible to reconcile the testimony of the several witnesses with any theory that they are all correct in their statements.

I have examined with great care all the evidence introduced to ascertain whether I was authorized or required to interfere with the ruling of the examiner of interferences and the finding of the board of appeals. While the case is not free from doubt on the evidence, yet I am clear that its palpable weight is with Marsh, and I therefore approve and confirm the decision of the board of examiners-in-chief.

BENJ. BUTTERWORTH,
Commissioner.

Sept. 5, 1884.

Ex'd: A. H.

[Endorsed:] Marsh *vs.* Hoag. Interference proceedings. Marsh *vs.* Hoag. Commissioner's decision. September 5, 1884. Recorded, vol. 26, page 247.

598 2–175.

24648.

DEPARTMENT OF THE INTERIOR,
UNITED STATES PATENT OFFICE.

To all persons to whom these presents shall come, Greeting:

This is to certify that the annexed is a true copy from the files of this office of the affidavit of Edwin C. Nichols, executed Nov. 10, 1884, in the matter of the interference of Marsh *vs.* Hoag, for improvement in reversing gear for steam-engines.

In testimony whereof I, Benj. Butterworth, Commissioner of Patents, have caused the seal of the Patent Office to be affixed this 9th day of December, in the year of our Lord one thousand eight hundred and eighty-four, and of the Independence of the United States the one hundred and ninth.

[SEAL.]

BENJ. BUTTERWORTH,
Commissioner.

599 Before the Commissioner of Patents.

In the matter of the interference between the application of Elon A. Marsh for a patent for improvement in reversing gear for steam-engines, and reissued letters patent No. 9951, granted Nov. 29th, 1881, to A. J. Hoag, assignor to Nichols, Shepard & Co., now pending before the Commissioner of Patents.

THE UNITED STATES OF AMERICA.

STATE OF MICHIGAN, *County of Calhoun,* } *ss:*

EDWIN C. NICHOLS, being duly sworn, deposes and says that he resides in Battle Creek city, State of Michigan; that he is a member of the corporation in Battle Creek city known as Nichols, Shepard & Co.; that he knows Elon A. Marsh, Martin Metcalf, and Minard

Lafever, all of the city of Battle Creek, Mich.; and this deponent further says that he has had charge and management of the above-entitled matter of interference in behalf of Nichols, Shepard & Co.; and this deponent further says that on the 8th day of November, 1884, at the office of Eugene M. Converse, in the city of Battle Creek, he was present with Eugene M. Converse and Martin Metcalf when a conversation and discussion was had in reference to the above-entitled matter of interference and the device or invention therein involved, and that said Martin Metcalf then and there stated to this deponent and said Eugene M. Converse that he, Metcalf, had had the charge and management of the procuring and taking of the testimony on behalf of Elon A. Marsh in the said matter, and that some time before the taking of any testimony in said matter of interference he, Metcalf, while preparing to take the testimony on
600 behalf of Marsh, had a conversation with Minard Lafever in regard to the said matter and the testimony to be produced, when said Minard Lafever told him, Metcalf, that Elon A. Marsh had filed a caveat for the device or invention claimed by Marsh in said matter of interference, and that the caveat so filed did not claim or represent fixed and adjustable stops on the invention and device therein set forth and described, and he, Metcalf, asked said Lefever if he didn't understand the device and Lefever replied that he didn't know as he did at the time, and Metcalf said to Lefever, "Marsh understands it, doesn't he? He says he does." And that Lefever replied, "Marsh did not understand it; damn him, Marsh lies."

And this deponent further says that said Martin Metcalf stated there and then on said 8th day of November, 1884, that he had talked with Marsh and Lefever on several occasions, and that they at all times said to him, Metcalf, that the caveat filed by Marsh did not contain fixed and adjustable stops; and this deponent further says that said Martin Metcalf stated further that he knew that Elon A. Marsh did not comprehend the features of said device involved in said matter of interference when he, Marsh, filed his said caveat; and this deponent further says that said Metcalf further stated to this deponent and Eugene M. Converse, on said 8th day of November, that the said Moon engine, so called, upon which Marsh first applied the reversing device, when it was placed in the rooms in the Eldred block, occupied by the Society for the Advancement of Machinists, did not have upon it said reversing device, fixed and adjustable stops or any stops of any kind whatever, and that he, Metcalf, knew that there were no stops on said reversing device when said Moon engine, so called, was removed to and used in the rooms of the Society for the Advancement of Machinists; and this depo-
601 nent further says that said Metcalf further said on said 8th of November that, as the said matter of the interference was now decided, he had no hesitancy in saying that the whole claim of Marsh in the said matter was a fraud on Hoag and Nichols, Shepard & Co., and that it had only been carried through by cunning management on the part of Marsh, and that he was perfectly willing that this deponent and said Converse should make affidavits of

his statements to them; that he did not wish to make affidavit of the facts for personal reasons, but that he would go on the stand as a witness in the court and swear to the truth of all of his statements so made to this deponent and said Converse.

And this deponent further says that said Metcalf further said in presence of deponent and Eugene M. Converse that before taking the testimony in said matter of interference he, Metcalf, talked with Marsh and Lefever about producing said caveat in evidence in said matter, and that on a more careful and thorough understanding of the contents of said caveat filed by Marsh it was decided that they dare not produce it, as it would, in the judgment of Marsh himself and others, absolutely defeat the claim of Marsh in the matter of the interference, and for that reason they withheld it from being used, they knowing that the opposite party in the matter could not get hold of the said caveat and its contents used not be disclosed.

And this deponent further says that from the information given him by said Metcalf and other facts in the case to him known that he has good reason to believe and does believe that Andrew J. Hoag and Nichols, Shepard & Co., parties to the above-entitled matter of interference, have been and are the victims of gross frauds and irregular practices in the proceedings in said matter of interference, and, as this deponent is informed and verily believes, Elon A. Marsh
602 did not invent or discover the invention or device involved in said matter of interference, and that said Marsh showed the state of his invention, if any, in the caveat filed, as hereinbefore referred to, and that said caveat did not embody or contain fixed and adjustable stops, as claimed by Marsh in the said matter of interference, and that said Marsh with others conspired to defeat A. J. Hoag and Nichols, Shepard & Co. of their just and legal rights in said matter of interference.

And this deponent further says that he makes this affidavit in the interest of Nichols, Shepard & Co., assignee, and that he verily believes that the honorable Commissioner of Patents should reopen said matter of interference and permit Nichols, Shepard & Co. to produce the newly discovered evidence herein referred to and referred to in another affidavit made by this affiant in this matter, to the end that the truth may be made to appear in said matter and that justice may be done; and further deponent says not.

EDWIN C. NICHOLS.

Ex'd: H. M. H.; E. A. M.

STATE OF MICHIGAN, } ss:
County of Calhoun, }

I, Joel C. Hopkins, a notary public in and for Calhoun county, Michigan, do hereby certify that on the 10th day of November, 1884, Edwin C. Nichols appeared before me and subscribed the foregoing affidavit, and swore that he had heard the said affidavit read and knew the contents thereof, and that the same was true of his own knowledge except as to those matters he believed *it* to be true.

In testimony whereof I have hereunto set my hand and seal this 10th day of November, A. D. 1884.

[L. S.] JOEL C. HOPKINS,
Notary Public.

603 2-175.

5614.

DEPARTMENT OF THE INTERIOR,
UNITED STATES PATENT OFFICE.

To all persons to whom these presents shall come, Greeting:

This is to certify that the annexed is a true copy from the records of this office of the division of the examiner of interferences March 6, 1884, in the matter of the interference, Marsh *vs.* Hoag, for improvement in steam-engines.

In testimony whereof I, Benj. Butterworth, Commissioner of Patents, have caused the seal of the Patent Office to be affixed this 13th day of March, in the year of our Lord one thousand eight hundred and eighty-four, and of the Independence of the United States the one hundred and eighth.

[SEAL.]

BENJ. BUTTERWORTH,
Commissioner.

604 United States Patent Office.

MARSH
vs.
HOAG.

Before the examiner of patents. Interference. Steam-engines.

Marsh's application filed Sept. 28, 1881.
Hoag's application filed Nov. 7, 1881.

Mr. C. M. Alexander, Toulmin & Semmes, and V. D. Stockbridge, for Marsh; Mr. Addison M. Smith, Alex. Mahon, & Warren Stone, for Hoag.

Invention.

"1. The combination, with the valve rod and lever carrying the reversing wheel, of the rod and lever for actuating said lever and the arm or standard and adjustable stops for regulating the throw of lever, substantially as specified."

"2. In combination with the lever, the gear-wheels and the valve rod, the segmental guide and adjustable stops, substantially as and for the purposes specified."

"3. In a reversing gear for steam-engines the two gears of equal diameters, mounted one on the said shaft as a center main engine shaft and the other upon a lever adjustable around and carrying crank wrist, to which the valve rod is connected, in combination with stops limiting the throw of said lever."

It is conceded that Marsh originated the main features of the reversing mechanism, consisting of the two gear-wheels arranged as described, to the movable one of which the valve rod is attached and the movements of which are controlled by a reversing lever engaging with the segment.

605 The position taken by Hoag is that he perfected this device in its application to traction engines by adding the adjustable stops situated near the gear-wheels to hold them in their adjusted position, thus forming the combination specified in the issue.

Marsh locates the conception of his invention in December, 1879; shortly afterwards, in January, 1880, he announced his invention to the Society for Advancement of Machinists, of which he was a member. He brought to one of the meetings of this society, as he testifies, a drawing of his invention, of which Marsh's Exhibit B, Fig. 1, is a representation, and by means of this sketch he described the operation of his proposed reversing gear. In the discussion which ensued it was suggested that in the application of the device to a traction engine the elasticity and vibration of the parts would cause inaccuracy in the movement of the valve. Marsh did not agree with this view, but asserted that if it were so he would use a support near to the swinging frame with lugs against which the arm carrying the movable wheel and wrist pin should come to rest. In explanation of his idea he made a sketch on a blackboard, of which figure 2 of Marsh's Exhibit A is represented to be a copy. The original drawing represented in Marsh's Exhibit B, figure 1, is not produced. The blackboard sketch, of which Marsh's Exhibit A is a copy, was ephemeral and has long since disappeared.

Two witnesses are produced who were present on this occasion. Mr. Young testifies that in the latter part of February, 1880, Mr. Marsh made a diagram of his reversing gear or valve gear before the class (referring to the society above mentioned). He verifies Marsh's Exhibit A and B as being true representations of the devices there illustrated and described.

606 His testimony is somewhat meager, but is directed positively to the point at issue. He discriminates in his recollection between the form of device as applied to stationary and traction engines.

The testimony of Lafever is to the same effect. He testifies that he was present when Mr. Marsh disclosed his invention at the meeting of the society in question; that he illustrated on the blackboard the essential features of his invention and submitted them to the criticism of the members present; that the question of applying the device to traction engines was discussed and illustrated substantially as represented in the drawing, figure 2, Marsh's Exhibit A.

It appears that this witness is interested in Marsh's invention. The testimony on this branch of the case is not as full and satisfactory as might be desired, but it is not believed to be without weight in view of the circumstances. The alleged disclosure of the invention, as testified to by Marsh and his witnesses, was attended with considerable publicity, and he mentions the names of a number of persons who were present upon the occasion. It would be reason-

able to expect, therefore, that the other side would be able to produce abundant testimony to disprove the story of Marsh if the facts were otherwise. No such testimony is introduced, nor was any effort made in the cross-examination to call out any more detailed account of the matter with a view of probing the conscience or recollection of the witnesses.

607 Some time after, in March, 1881, Marsh applied his device to a stationary engine, which was subsequently purchased by Brown, a printer, and put into constant use in his printing establishment. A drawing is introduced, Marsh's Exhibit A, figure 1, to show the construction of the reversing gear. The drawing shows the main features of the reversing gear in controversy as applied to a stationary engine. The reversing lever, however, is connected directly with the gear, and, as contended by Hoag, the machine does not contain adjustable stops in the sense intended by the issue. The engine itself was not produced in evidence, nor was there any formal explanation upon the record of the reasons why the engine was not produced. It appears, however, in the testimony that the engine was the property of Brown, and was being daily used by him in the course of business, and that it would practically have been a matter of great inconvenience to produce the engine as an exhibit in the case.

Counsel on the other side were informed that the engine was but a short distance from the place of examination, where they could, if they so desired, inspect it. Efforts were made at an earlier stage in the case to strike from the record all testimony relating to this engine, on the ground that the engine itself was the best evidence, but it has been finally determined by the Commissioner that, in view of all circumstances in the case, merely formal objections to this testimony and the testimony relating to the original drawings would not be sustained, but that the testimony might be considered for what it was worth.

The engine in question has been in constant operation at a printing establishment in a small town in which these parties live, and it is in evidence that parties in interest on the other side have seen and inspected the same. They were challenged by the

608 evidence submitted by Marsh to show that this engine was not constructed and did not operate in the manner described. This they have failed to do, and I think the testimony relating to the construction of the machine is, under the circumstances, entitled to full weight.

The present owner of the machine is produced, who fully and clearly describes the machine in all the parts essential to the points at issue. I find the objection to this testimony is purely formal, and in that sense has been finally overruled by the decision of the Commissioner. It appears that Marsh disclosed his invention, at least so far as perfected in the Moon engine, to the manufacturing firm of Nichols, Shepherd & Co. for the purpose of interesting them in his invention. Having finally obtained permission to apply his device to one of their traction engines, he came to their establishment on Sept. 7, 1881, to make the trial. It is agreed that in the first appli-

cation of his reversing device to a traction engine at the works of Nichols, Shepard & Co. he did not apply the adjustable stops for the purpose of holding the gears in their adjusted position, and that the first trial of the engine proved to be unsatisfactory on this account. The only holding device being at the forward end of the reach rod, the elasticity of the parts interfered with the correct operation of the valve.

On behalf of Hoag it is claimed that the engine as thus constituted was entirely inoperative and would not move at all, while Marsh represents that, although the action was imperfect, it was not entirely inoperative. To remedy the defect in the operation of the machine upon the following day a stay plate was bolted to the
609 boiler near the gear-wheel with projecting stops or lugs against an arm projecting from the movable gear-wheel — rested and was held. As to the origin of this device, the testimony upon the point is attended with the usual difficulties that occur where both contestants are present at an experiment made before the controversy arises and where they amicably unite in their efforts to improve the machine. Each party represents that he made the pregnant suggestion, and that the other party only co-operated with him in carrying his ideas into effect.

According to Marsh's account of the matter, on the morning of the eighth of Sept., having made another trial of the device, he instructed Michael Rainbow, a blacksmith in the employ of Nichols, Shepard and Co., to make a stop plate out of wrought iron, and for his guidance made a sketch on the shop floor with a piece of chalk. After the forging was done he took it to the engine, fitted it to the boiler, and marked the position of the holes, and, with the assistance of John Henry, drilled the holes and put in the set-screw to be used as an adjustable stop, and then, with the assistance of John Henry, bolted the same to the boiler.

Henry and Rainbow corroborate this account of the matter. Hoag represents that he was called out to witness the experiment, and that Marsh acknowledged that the gear was a failure, and that he then critically examined the gear and conceived the idea that if he could stay the gear by stops located at that end of the engine there would be no difficulty in making it operative. He then made the necessary measurements with a rule and cut a pattern for the stop out of sheet iron, handed the pattern to Mr. Marsh, and directed him to have the stop forged, and Mr. Marsh soon after brought him the iron stop. He then went to the machine shop and had a hole drilled for the set-screw. Then, with the help of Mr. Nelson,
610 he personally applied the stop to the boiler. With this improvement the operation of the machine was entirely satisfactory.

Bradley — that he saw Hoag make the measurements with his rule and afterwards cut out a sheet-iron copy, which he gave to Marsh, with instructions to get one forged like it.

Nelson testifies that he assisted in applying the stop.

Considerable testimony was introduced by Hoag in surrebuttal to show that Rainbow and Henry were not present at the works of

Nichols, Shepard & Co. at the time of his appointment experiment, and that their testimony, therefore, must be incorrect. This testimony is purely negative and inferential in its character, consisting of the testimony of witnesses who do not now remember that they saw the men at the works at that time, and of the labor record of Nichols, Shepard and Co., from which the same inference is sought to be derived. I do not think that this testimony can prevail over the positive testimony of Henry and Rainbow that they were then present.

The evidence relating to the circumstances attending the improvement of the engine by the addition of the stay plate is very evenly balanced so far as regards the number of witnesses and the circumstantiality of their testimony; but, in view of all the facts in the case and the bearing of the witnesses, I think that Marsh's account of the matter is more probable.

Hoag testifies that Marsh experimented with his machine for six or eight days, and that he was entirely unable to move the engine at all. This statement is altogether unreasonable and is opposed to the weight of testimony in the case. The witnesses on both sides substantially agree that the first trial was made on the 7th of
611 Sept., and that the improvement was applied on the following day, and Marsh's witnesses testify—as seems entirely reasonable—that the engine, in fact, operated in the trials of the 7th of Sept.

It is admitted that the leading features of the apparatus in controversy were originated by Marsh, and it is fairly proven that he had speculated upon the subject of the application of this gear to traction engines prior to the trial at the works of Nichols, Shepard & Co., and that substantially the same device that was applied to the engine on the 8th of Sept. had previously occurred to his mind in that connection. It is proven beyond all doubt that he had actually made and used in the Moon engine adjustable stops located near the gears which were the same in principal as the device in controversy and effected the same object. In that engine the reversing lever was attached directly to the gear-wheels and was controlled in its movement by stops on a quadrant located in the immediate vicinity. In applying the gear to a traction engine the reversing lever was carried to the forward part of the engine for the convenience of manipulation, and was connected to the gear by means of a reach rod extending from the reversing lever to an arm projecting from the gear. It was the elasticity of the parts as thus arranged which interfered with the correct movement of the valve. The invention consists in adding to the device a stay plate near the gears and an arm projecting from the gears to act against stops on the stay plate which operate precisely in the same way in this respect that the reversing lever and segment did in the original form of the device.

612 It is contended in behalf of Hoag that the projecting lugs on the quadrant in the Moon engine did not and cannot act as stops to hold the lever and brace the gears, since they only control the movement of the reversing lever in one direction. The testimony to the effect that the Moon engine corresponds precisely with

the machine shown in Marsh's Exhibit A, Fig. 1, and that as a matter of fact the engine has been in daily use and commercial use in the printing establishment of the Nightly Moon newspaper, leaves no ground for this objection to rest upon. The owner of the engine, Mr. Brown, testifies that at the first starting of the engine it is necessary to hold the reversing lever against the stops for a short time, but that after the engine is fairly started the lever is held securely against the stops.

I have considered the case as presented by counsel at the hearing and upon the theory that the issue is restricted to the particular application of the reversing device to traction engines, wherein the lever carrying the reversing gear is operated at a distance through the intervention of a reach rod and is stayed by supplementary stops. These elements are fairly implied in the first issue as declared, but it would seem that the terms of the second and third issues are entirely satisfied by the Moon engine made by Marsh before Hoag claims to have made his invention. Reference is made to the fact that in December, 1880, Mr. Marsh took out a patent for his reversing gear in which he made no claim to the invention in controversy. The application upon which that patent was granted was filed in May, 1880, and before the date of the experimental application of that device to a traction engine at the works of
613 Nichols, Shepard & Co. In this patent the reversing lever was shown and described as attached directly to the reversing gear, and no reference was made to any modification of the apparatus to meet the requirements of a traction engine. The mere fact that Marsh did not include in this patent the particular application of his device to traction engines cannot be considered to outweigh or weaken in any material degree the force of the testimony which has been considered and referred to.

Upon the record as made up I am of opinion and do so decide that Marsh is the prior inventor; limit of appeal, 20 days.

FRANK MACARTHUR,
Examiner of Interferences.

March 6, 1884.
M. J. H.

[Endorsed:] 8251. 63. Marsh *vs.* Hoag. Decision. Recorded vol. 15, p. 368. March 6, '84.

614 2–175.

27211.

DEPARTMENT OF THE INTERIOR,
UNITED STATES PATENT OFFICE.

To all persons to whom these presents shall come, Greeting:

This is to certify that the annexed is a true copy from the records in this office of the decision of the Commissioner in the matter of the interference—Marsh *vs.* Hoag—for improvement in steam engines.

In testimony whereof I, Benj. Butterworth, Commissioner of Patents, have caused the seal of the Patent Office to be affixed this 22nd day of December, in the year of our Lord one thousand eight hundred and eighty-three, and of the Independence of the United States the one hundred and eighth.

[SEAL.]

BENJ. BUTTERWORTH,
Commissioner.

615 U. S. Patent Office.

MARSH
vs.
HOAG.

Steam engines.

Motion.

Application of E. A. Marsh, filed Sept. 28, 1881.
Application for reissue of A. J. Hoag, filed Nov. 29, '81.

Mr. C. M. Alexander for Marsh; Toulmin & Semmes, of counsel.
Mr. A. M. Smith for Hoag; Alexander Mahon, of counsel.

This motion rests upon purely technical grounds. The examination of Marsh and his witnesses seems to have been conducted by a gentleman who was not a lawyer; and, while he did substantially all that the spirit of the law governing the production of evidence demands, he failed in some particulars to conform to the strict technical requirement of its letter.

As an illustration: Marsh and possibly one of his witnesses, while being examined, referred to and described an engine in connection with which the device in controversy was used, it forming a part of the operative mechanism of the engine. To produce it would have required the production of the engine. On reference to the engine, as embodying the invention in controversy, counsel for Hoag demanded the production of the model (engine) referred to. Thereupon it was explained to Hoag and his counsel that Marsh did not own the engine; that it was the property of Mr. ——, who was using it every day to drive a printing press; that the office
616 where it was in use was about 800 feet from where they were examining the witness, and it was proposed that they go and examine it. This plain statement and practical plan and offer were not a technical compliance with the letter of the law. It seems, however, that Hoag had in fact examined that engine, knew all about it, and that, doubtless, accounts for the fact that he and his counsel did not at the time it was suggested go and make the examination proposed, Hoag knowing very well that he could add nothing to his stock or knowledge thereby; and this is made certain by the fact that when I asked counsel "in case this motion should be overruled would you desire to take further testimony?" he promptly replied that he would not.

Again, it is moved to exclude the model, which, it is alleged, Marsh made and brought on with him, but which, it appears, has never been offered in evidence, although this motion is made to exclude that model (on the theory that it will be used as evidence); yet counsel for Hoag state distinctly that if the model was in evidence it could easily be shown by an examination of it that it is in nowise identical with the invention of his client, Hoag. Just why Hoag should move to exclude this model as evidence in the case, when in fact it has not been offered, and more particularly since he (by counsel) states that if it was in evidence it would settle the question in his favor, I am at a loss to understand.

It will be observed that Hoag has, under leave, been permitted to examine witnesses in what is called surrebuttal. He has, doubtless, under this leave, introduced any evidence he had to meet all points made by Marsh in chief or rebuttal. I am unable to discover from any suggestion of counsel for Hoag, or from anything in the record to which my attention has been called, that any possible injustice can result to him by the admission of the questions and answers objected to. It may well be doubted whether the
617 purely technical objections are not overcome by the course the examination took, as disclosed by the whole record. At all events, it is clear that the granting of this motion would be utterly indefensible, since it is apparent that it is pressed, not to secure a right, but to gain an advantage.

There is not the slightest disposition on my part to relax the rule governing the admission of evidence. To do so would be to substitute confusion for orderly methods. In this case there has been a substantial compliance with the rule, and so far as there has been a departure therefrom Mr. Hoag has in nowise suffered. The motion is overruled.

BENJ. BUTTERWORTH.

December 17, 1883.

M. J. H.

[Endorsed:] U. S. Patent Office. Comm'r's decisions, Marsh *vs.* Hoag, Dec. 17, 1883.

618 2–175.

14644.

DEPARTMENT OF THE INTERIOR,
UNITED STATES PATENT OFFICE.

To all persons to whom these presents shall come, Greeting:

This is to certify that the annexed is a true copy from the records of this office of the decision of the examiners-in-chief in the matter of the interference, Marsh *vs.* Hoag, May 9, 1884, for reversing gear for steam-engines.

In testimony whereof I, Benj. Butterworth, Commissioner of Pat-

ents, have caused the seal of the Patent Office to be affixed
[SEAL.] this 2nd day of July, in the year of our Lord one thousand eight hundred and eighty-four, and of the Independence of the United States the one hundred and eighth.

BENJ. BUTTERWORTH,
Commissioner.

619 No. 8351.

UNITED STATES PATENT OFFICE, *May* 9, 1884.

Before the examiners-in-chief on appeal.

In the matter of the interference between the application of Elon A. Marsh, filed September 28, 1881, and the reissued patent of Andrew J. Hoag, No. 9857, dated November 27, 1881.

Improvement in Reversing Gear for Steam-Engines.

"The matter in controversy is—

1. The combination, with the valve-rod and lever carrying the reversing wheel, of the rod and lever for actuating said lever and the arm or standard, and adjustable stops for regulating the throw of the lever, substantially as specified.

2. In combination with the lever, the gear wheels and the valve rod, the segmental guide, and adjustable stops, substantially as specified.

3. In a reversing gear for steam-engines, the two gears, of equal diameters, mounted one on the main engine-shaft and the other upon a lever adjustable around said shaft as a center and carrying crank-wrist to which the valve rod is connected, in combination with stops limiting the throw of said lever."

The gist of the matter at issue is the specific improvement indicated in the words "adjustable stops" for limiting the throw of the reversing lever. The reversing gear itself, on which the improvement is based, is the patented invention of Marsh (patent No. 236,052, December 28, 1880). Of this there is no question. Said patent has been in litigation, and while the court found a technical bar to a finding of infringement in the fact that the acting Secretary of the Interior, Mr. Bell, neglected to affix his signature, as required by law, the validity of the patent in other respects and of Marsh's
620 equitable title to inventorship was not impugned. (Marsh *vs.* Nichols, 246 G., 901.) The question is, when and by whom was the improvement in question devised and added?

Marsh claims conception as early as December 25, 1879. He avers that he illustrated the same by blackboard sketches before the Society of Machinists in Battle Creek, Michigan, January 1, 1880. As a result of the discussion and criticism of the device at that time, he produced on the blackboard a sketch, of which Marsh's Exhibit A, figure 2, is put forward as a copy. This drawing clearly shows the improvement in controversy, but was objected to by opposing counsel as not the original sketch, and therefore not the best evidence.

Two witnesses are produced by Marsh to substantiate what Marsh alleges he disclosed before the society at the meeting referred to. Young identifies the subject of the blackboard sketches with the drawing, Exhibit B, which he locates on the last of February, 1880, and he identifies figure 1, Exhibit A, as illustrating the substance of what he saw in a model at the Battle Creek Machinery Co.'s shop the last of February or the first of March, 1880. He identifies the adjustable stops as a part of the device then seen. On cross-examination Lafever testifies more positively, and corroborates Marsh as to the discussion and criticism of the foundation device. While substantiating the testimony of Young, that at subsequent meetings the subject was further discussed and illustrated by the production substantially of what is represented "in this drawing marked figure 2," he leaves us in the dark as to whether figure 2 A or figure 2 B is referred to; but he further testifies that he saw the model at
621 the Battle Creek Machinery Co.'s shops the last of February or the first of March, 1880, which contained this invention. Lafever further testifies that he saw the device in question applied upon a traction engine on the premises of Nichols, Shepard & Co., in Battle Creek, Mich., in the early part of September, 1880; also at the shops of J. I. Case, at Racine, Wis., in the latter part of January and early part of February, 1881, and since then at various times upon traction engines.

George W. Marsh testifies that he also saw the device in controversy in February, 1880, illustrated in the drawings shown him by E. A. Marsh, and that in the early spring of 1880—he thinks March—he saw an operative model of this invention which worked successfully.

Martin E. Brown testifies that in the latter part of March or first of April, 1880, he purchased a steam-engine of one Cummings that had Marsh's attachment upon it, and has it still. He specifies the movable stop as a feature of it, and distinguishes between it and the device as patented by Marsh. It was objected that Brown's engine was not produced in evidence; but, on the other hand, it was shown that said engine was in constant use for printing purposes; that its production would have been attended with great inconvenience; that the parties in interest adversely have seen and inspected it and were challenged to show that its construction and operation were not as alleged, and were invited at the taking of evidence to go a short distance from the place of examination to verify its character, but refused. There is no reason, therefore, to doubt the accuracy of Brown's testimony regarding this engine, and it is of weight in aiding the determination of an issue of this character. Brown testifies that the engine has not been altered since he bought it. Brown is not cross-examined nor impeached.

It is noted that in the third claim in issue the matter is not even limited to adjustable or movable stops, but comprises simply
622 "stops limiting the throw of the lever." On behalf of Marsh it is intimated that Marsh's invention in its original form, as patented and as first constructed for Nichols, Shepard & Co. (the contestants in this interference), fully comes within the

terms of this *issue* branch of the issue, since the device, figure 2, Exhibit A, clearly shows "stops limiting the throw of the lever," at (by) N, and the patent of December 28, 1880, shows equivalent stops on the semicircle for arresting the throw of the shifting lever by means of the spring-catch M on said lever. Hoag, however, not only qualifies this as not the stop he has in mind, but would even throw out of court any and all stops for limiting the throw of the lever if not located substantially as shown in his patent of July 26, 1881, to wit, so as to limit the movement of a short radial arm auxiliary to the lever itself. There is no doubt that there may be a choice of position for these stops for relative efficiency, but such a matter is wholly apart from the issue here in controversy.

Hoag is superintendent for Nichols, Shepard and Co., the assignees and contestants in this proceeding. He testifies that on the 7th of September, 1880, Marsh came to the shop of his employers who were building traction engines and obtained permission to put one of his, Marsh's, reverse gears on an engine of their construction. He put it on in six or eight days. Marsh found difficulty, according to Hoag, in starting the engine, and Hoag then and there conceived, invented, and had put on an adjustable stop which remedied all the difficulty. This was the date of Hoag's invention. His employers filed an application for a patent for it June 9, 1881, which issued July 6, and was reissued November 29, 1881. Marsh applied September 28, 1881.

Hoag is asked point blank, on cross-examination, if he did
623 not prior to September 7, 1880, "see and critically examine a Marsh reverser applied to a steam-engine doing effective work in a printing office, where is and then was printed a daily paper, the power to do which work was furnished by one engine, to which said Marsh's reverser with movable and adjustable stops and with set-screws to regulate the throw of the reversing lever was applied," but Hoag was unable at the moment to remember any such thing. Marsh, however, called in rebuttal, swears that late in June or early in July, 1880, he personally exhibited and explained to Hoag the identical engine sold to Martin E. Brown, in the presence of Brown and others, which said engine is proved by Brown and others to have had on it at the time the adjustable stops constituting the matter in dispute. Hoag himself reversed the engine and examined it critically. The stops and their location were especially referred to. Marsh denies on rebuttal that Hoag handed him any pattern for a stop-plate or intimated that he had invented anything. Marsh, however, states that he himself had stop-plates made by one Rainbow, a blacksmith employed by the company, and had them applied by the assistance of one John Henry with a set-screw. Henry, sworn, corroborates Marsh's statement in this regard. Rainbow, sworn, fully corroborates Marsh as to making the stop-plate, and that he received his information and directions from Marsh. These workmen are both in the employ of Nichols, Shepard & Co. Rainbow further swears no sheet-iron pattern was brought to him by Marsh to work by, but that Marsh drew his instructions with a piece of chalk on a board.

Martin E. Brown, sworn on rebuttal, fully corroborates Marsh's statement as to the exhibition in the summer of 1880—July—of the reversing gear on Brown's engine, employed in running his printing press, to Hoag. He says that Marsh asked leave to exhibit it to Hoag.

624 "He frequently brought machinists to look at it. Mr. Marsh operated it and explained it." The reversing gear was the same then that it is now. Mr. Brown was asked what device was used on his engine to prevent the reversing lever from swinging backward and forward between the stops, and Brown replied that there was none, but that it had never troubled them any except at starting, and then was easily remedied. Mr. Marsh explained at the hearing that the difficulty was only an imaginary one while the engine was in motion, since the nature of the thrust at both extreme positions of the lever was such as to maintain the lever in position against the stops. For large engines, however, Mr. Marsh uses a graduated arc, with notches and a snap-catch on the lever.

There is an attempt to *over* overturn the testimony — Rainbow and Henry by negative evidence given by other employees to the effect that said workmen were not present on the particular day fixed as the one when the work was done under Marsh's directions, but the testimony of the former witnesses is too positive and circumstantial to be thus neutralized. Thomson and Drew both swear for Hoag that they saw him apply a stop with adjustable set-screws, but they both swear also that it was in October or November, 1880, which was a month after the original stop had been applied under Marsh's directions. One Stilson, also a workman, was called in surrebuttal to prove that he was present during the application of a reversing gear to one of his employer's traction engines "during the fall of 1880," and he swears that neither Rainbow, Henry, nor Marsh were present, but he does not identify the engine as the one first altered by Marsh, and by every reasonable conclusion it was the one repaired later, namely, in November, 1880, by Hoag, as testified to by Thomson and Drew.

625 Notwithstanding a vast amount of conflicting testimony, the fact appears to stand out in clear light that Marsh, the original inventor of the reversing gear, invented also the adjustable stops now in controversy some time in the spring of 1880, disclosed the same to others, and embodied it in an operative model and placed it on a working engine prior to April 1st, 1880, which was sold, put into practical and successful use, and is still in use; that prior to September, 1880, Marsh disclosed the device to Hoag, among others, and explained its working; that September 7th or 8th, 1880, Marsh, in putting one of his reversing gears upon an engine in the shops of Nichols, Shepard & Co. by their permission, wherein he had left off the stops, found some difficulty in working the traction gear in their absence, which difficulty was remedied by supplying the stops by the aid of the workmen in the shop under Marsh's own directions; that this date of September 7th, 1880, is the earliest that Hoag can claim, even on the theory of participation in the contrivance of the remedy then applied, which date of invention is entirely over-

come by the weight of testimony in favor of Marsh's prior date of invention and reduction to practice, not to say disclosure to Hoag himself. This evidence in Marsh's favor is too voluminous and consistent to be set aside as fiction, and we must therefore find Marsh to be the prior inventor and affirm the finding of the examiner of interferences.

H. H. BATES,
R. L. B. CLARKE,
ROBERT J. FISHER, JR.,
Examiners-in-Chief.

M. J. H.

[Endorsed:] 3. 8351. Elon A. Marsh *vs.* A. J. Hoag. Subject matter, reversing-gear for steam-engines. Decision of the examiners-in-chief, May 9, 1884. Recorded, vol. 18½, p. 189.

626 *Com'r's Decision on Motion to Reopen.*

2–175.

24650.

DEPARTMENT OF THE INTERIOR,
UNITED STATES PATENT OFFICE.

To all persons to whom these presents shall come, Greeting:

This is to certify that the annexed is a true copy from the records of this office of the Commissioner's decision, November 21, 1884, in the matter of the interference, Marsh *vs.* Hoag, for improvement in reversing gear for steam-engines.

[SEAL.] In testimony whereof I, Benj. Butterworth, Commissioner of Patents, have caused the seal of the Patent Office to be affixed this 11th day of December, in the year of our Lord one thousand eight hundred and eighty-four, and of the Independence of the United States the one hundred and ninth.

BENJ. BUTTERWORTH,
Commissioner.

627 U. S. Patent Office.

MARSH
vs.
HOAG.

Reversing gear for steam-engines.

Application filed ——; petition E. A. Marsh, filed September 28, 1881.

Reissue patent No. 9957, granted A. J. Hoag November 26, 1881.

Mr. V. D. Stockbridge, for Marsh; Mr. A. Mahon, for Hoag.

This is a petition for stay of proceedings in order that Hoag and his assignees may present a motion for a new trial on the ground of newly discovered evidence.

This case has been pending about three years; has been tried before the examiner of interferences, appealed to and heard by the examiners-in-chief, then by the Commissioner, and was subsequently appealed to the Secretary of the Interior, who dismissed the appeal for want of jurisdiction. Within the last few days the present motion has been presented, and it is asked that the issue of a patent to Marsh be delayed until the motion is disposed of. Certain affidavits which are to be filed in support of the motion have been submitted for my inspection. Among others, there were filed the affidavits of Mr. Converse and Mr. Nichols, the latter being one of the assignees of Hoag. In these affidavits it is stated that recently affiants had met one Mr. Metcalf, the counsel who had charge of the application of Marsh, and who prosecuted the same to a successful issue.

628 Affiants further state that at that interview, which took place at the office of Converse, Mr. Metcalf was at pains to say that the patent of his client (Marsh) was procured through fraud, to which he (Metcalf) was a party. He seems now to be heartily engaged in the work of defeating the patent he was in a measure instrumental in procuring. While he did not make an affidavit himself, he stated that he was willing that they, the affiants, should embody in an affidavit his statements, and that he would testify to the facts afterwards.

There is no probability of the truth of what Mr. Metcalf says. If his own account is to be accepted he is utterly unworthy of belief and should be promptly disbarred.

The evidence taken in the case shows that all matters appertaining to the issue were fully investigated. I deem every statement and suggestion of Mr. Metcalf as unworthy of consideration. I do this on the theory that the affiants, Converse and Nichols, correctly set forth their interview with Metcalf.

The other affidavits are entitled to more consideration. There are two things, however, to be said in regard to them:

First. If the affiants should testify substantially to what is set forth in their affidavits it is not clear that it would change the decision in the case; and, second, there is no evidence at all that due diligence was used to obtain the testimony of these men. They all resided at Battle Creek and belonged to the Society of Machinists, which met weekly, and at one of the sessions of which improvement in controversy was in connection with other matters discussed.

629 It is useless to say that the names of the members of that society could not be obtained. The evidence taken does not disclose that proper effort was made to ascertain them.

Before a party is entitled to a new trial, especially after the long course of proceedings had in this case, including three trials, he should show very clearly—first, that the newly discovered evidence would, if introduced, change the result; and, second, that the evidence could not have been secured by the use of due and proper diligence. I do not think that either condition is met in this case.

It is urged that the rights of the present patentee may suffer if a patent is issued to Marsh. The answer to that is, the rights of Marsh may suffer if his patent is withheld. Beyond this the peti-

tioners in this case are by no means remediless. The courts are open right at their doors at home, and adjudication there would be final. According to the statement of the petitioners Marsh has been constantly infringing their patent for two years or more. If that is true it was not difficult to restrain him by proceedings in equity.

Another thing is to be considered in that matter: Proceedings in this bureau are sometimes slow and, not being final, the result is not always conclusive, and hence not satisfactory. A proceeding in court to test the validity of Marsh's claim would settle the matter speedily, definitely, and finally. I do not hold that because the petitioners have remedy by appeal to the courts that therefore I may properly deny their request. I only refer to the matter for the purpose of showing that they have a remedy at hand which is more full and ample than the one they have here—are seeking here.

I do not think that the showing made entitles the parties to a new trial here, and, that being so, I do not feel that I am author-
630 ized or permitted to withhold the patent of Marsh.

The case presents the remarkable feature, too, of at least one of Marsh's attorneys having suddenly formed an alliance with the other side. This itself raises such a suspicion in my mind as to the character of the proceedings that I feel I could not properly grant the request. It is therefore denied.

BENJ. BUTTERWORTH,
Commissioner.

Ex'd: J. A. M.; M. McK.

November 21st, 1884.

[Endorsed:] 64650. D., '84. Marsh *vs.* Hoag. Comm'r's decision. Dated Nov. 21, 1884. Recorded vol. 26, p. 420.

631 EXHIBIT 28. Jun- 24, 1885. G. Gatrell, Official Stenographer, Marshall, Mich.

Law office of R. A. Parker, 19 Bank block, Detroit, Mich., counsel in patent & mechanical causes.

Before the Commissioner of Patents.

In the matter of the interference between the application of E. A. Marsh, filed September 28th, 1881, and the reissue patent granted Nichols, Shepard & Co., assignee of A. J. Hoag, November 29th, 1881.

Deposition of witnesses examined on behalf of E. A. Marsh, pursuant to the annexed notice, at the office of E. M. Converse, in the city of Battle Creek, Calhoun county, State of Michigan, Thursday, March 23rd, 1881.

Present: Martin Metcalf, Esqr., on behalf of E. A. Marsh, and Alex. Mahon, Esqr., on behalf of Nichols, Shepard & Co.

632 Before the Commissioner of Patents.

In the matter of the interference between the application of E. A. Marsh, filed September 28th, 1881, and the reissue patent granted Nichols, Shepard & Co., assignee of A. J. Hoag, November 29th, 1881.

Deposition of witnesses examined on behalf of E. A. Marsh, pursuant to the annexed notice, at the office of E. M. Converse, in the city of Battle Creek, Calhoun county, State of Michigan, on Thursday, March 23rd, 1882.

Present: Martin Metcalf, Esqr., on behalf of E. A. Marsh, and Alex. Mahon, Esq., on behalf of Nichols, Shepard & Co.

E. A. MARSH, being duly sworn, does depose and say in answer to interrogatories proposed to him by MARTIN METCALF, Esqr., counsel for E. A. Marsh, as follows, to wit:

633 Ques. 1. What is your name, age, residence, and occupation?

Ans. 1. My name is Elon A. Marsh; am twenty-eight years old; reside in the city of Battle Creek, Michigan, and am, by profession, a mechanical engineer and machinist.

Ques. 2. Are you the Elon A. Marsh, one of the parties to this suit in interference?

Ans. 2. I am.

Q. 3. Are you acquainted with Andrew J. Hoag, of Battle Creek, Michigan, and with the firm of Nichols, Shepard & Co., of said city?

Ans. 3. I am.

Ques. 4. How long have you been acquainted with Andrew J. Hoag and with said firm of Nichols, Shepard & Co.?

Ans. 4. About three years.

Ques. 5. Paper offered by Martin Metcalf, Esqr., for identification, and same marked Marsh's Exhibit "A." Do you or do you not recognize in this exhibit—Marsh's Exhibit "A"—the essential features of your invention as involved in this interference?

Ans. 5. I do.

Ques. 6. When did you conceive this invention?

Ans. 6. The twenty-fifth of December, A. D. 1879.

Ques. 7. When did you convey to others a knowledge thereof?

Ans. 7. I communicated a knowledge of my invention to a number of persons on the following week, and made a blackboard illustration of the device on the evening of January 1st, 1880, before the Society for the Advancement of Machinists, at their rooms in the Eldred block, in this city.

Ques. 8. Where was that?

Ans. 8. In the Eldred block.

Ques. 9. Please go on now and state the substance of what was said and done by you at that time in relation to your said invention.

Ans. 9. A discussion arose among the members as to the
634 adaptability of my device to traction engines, as previously

stated. To more clearly illustrate the essential features of my invention I brought with me to this meeting a drawing on paper, of which figure one (1) in this drawing is a copy. (Paper offered by Martin Metcalf, Esqr., for identification and same marked Marsh's Exhibit "B.") It was suggested by some one present that the elasticity and vibration of the parts would cause inaccuracy in the movements of the valve. I did not think so at the time, but asserted that if it were so that I would use a support placed near to the swinging frame "D" with lugs against which the arm carrying the movable wheel and wrist pin should come to rest. Other questions arose which I answered to the satisfaction, seemingly, of all present, the result of which was a sketch on the blackboard, of which figure two (2) in Marsh's Exhibit "A" is a copy.

Counsel for Nichols, Shepard & Co. object to the drawings, Exhibits "A" and "B," claimed to be copies of the drawings made upon the blackboard—

First. For the reason that they are not warranted by the preliminary statements made by said Marsh. Second. That if the original sketches cannot be produced the alleged copies are not proper evidence. Also objects to the answer as stating matters not warranted by the preliminary statement of said Marsh.

Ques. 10. When did you first apply movable and adjustable stops to your reversing gear for steam-engines?

Ans. 10. About the first of March, 1880.

[On the margin: Patent Dec. 28th, 1880.]

Ques. 11. To what engine was that gear with the movable and adjustable stops applied and where is it now?

Ans. 11. They were applied to a small engine, shortly afterwards purchased by Martin E. Brown for the purpose of running a printing press used in the office of the Nightly Moon, a daily paper published in this city.

Ques. 12. Did that application prove successful as a reverser of a steam-engine?

Counsel for Nichols, Shepard & Co. objects to all evidence offered in reference to this engine unless the same be produced and offered in evidence.

Ans. 12. It did.

635 Ques. 13. Has any change or alteration been found to be necessary in the reversing gear on the Moon engine up to the present time, so far as you know?

Ans. 13. There has not.

Ques. 14. Who was present at the club-rooms in the Eldred block at the time mentioned by you when you illustrated and described and explained your invention heretofore referred to?

Ans. 14. Minard La Fever, Thurlow Case, Edward Keets, George Young, and some others.

Ques. 15. To what other parties, if any, did you communicate a

knowledge of your invention before obtaining an allowance of your application?

Counsel for Nichols, Shepard & Co. objects to the question for the reason that there has been no allowance of the application by the Patent Office of the invention in controversy.

Ans. 15. To a number of my friends; to E. C. Nichols, of the firm of Nichols, Shepard & Co., and to some of the employees of the Battle Creek Machinery Company, at whose shops I made a working model of my device.

Ques. 16. What working model do you refer to?

Ans. 16. I refer to that engine purchased by Martin E. Brown and used in the printing office aforesaid.

Ques. 17. I do not know that my question No. 14 is understood. I referred to the time of the allowance of your patent, dated December 28th, 1880, No. 236,052. Did you or not so understand it?

Counsel for Nichols, Shepard & Co. objects to the question as misleading.

Ans. 17. I did.

Paper offered by Martin Metcalf, Esqr., for identification, and same marked Marsh's Exhibit "C."

Counsel for Nichols, Shepard & Co. objects to the offering of Exhibit "C" as having no bearing on the case in controversy; and, further, if intended to be used as a copy in evidence, a certified copy of the same should be introduced.

Ques. 18. At what time and in what manner did you first communicate the knowledge of your invention to Mr. E. C. Nichols?

636 Counsel for Nichols, Shepard & Co. objects to the question; that it does not state to what invention the question refers.

Ans. 18. About the fourth of February, 1880.

Ques. 19. I mean by the words "your invention," in the last question, the invention as adapted to traction engines. Did you so understand it? If not, please give your answer as you now understand it.

Ans. 19. I understood it as you expressed it last.

Ques. 20. Please go on and state as near as you can what was said and done, if anything, in reference thereto by yourself in that interview.

Ans. 20. I wish to know to what interview you allude.

Ques. 21. I refer to the interview held on the fourth of February, 1880, when you first communicated the knowledge of your invention, as adapted to traction engines, to Mr. E. C. Nichols, referred to by you in answer to question number 18.

Ans. 21. The communication made to Mr. E. C. Nichols on the fourth of February, 1880, was by letter, but was followed by an interview at the office of Nichols, Shepard & Co. on the sixth of that

month. I presented a drawing of my device for his inspection and explained the merits of the invention. The result of the interview was not as I had hoped, as Mr. Nichols could not be made to believe that the device would work.

Counsel for Nichols, Shepard & Co. objects to the answer unless the drawing referred to be offered in evidence.

Ques. 22. For what purpose did you seek and obtain this interview?

Ans. 22. For the purpose of getting Mr. Nichols interested in the invention.

Ques. 23. Did you have other interviews for this purpose; and, if so, with what results?

Ans. 23. I had other interviews, and about the 1st of August, 1880, obtained permission to put my device upon one of his traction engines.

Ques. 24. You mean the traction engine of Nichols, Shepard & Co., I suppose?

Ans. 24. I do.

637 Ques. 25. Did you act upon that permission; and, if yea, what did you do?

Ans. 25. I completed one of my reversing gears, and applied it to one of Nichols, Shepard & Co.'s traction engines, and tried it on the 7th of August, 1880; but owing to the omission of stops placed near to the swinging frame carrying the movable wheel and wrist pin, the operation of the device was not satisfactory.

Ques. 26. Was the defect, as then appearing, remedied; and, if so, how, and when, and by whom?

Ans. 26. It was, by me, on the following day, by attaching to the boiler of the engine underneath the swinging arm, carrying the movable gear and wrist pin, a plate, "P," having a set-screw, "K," against which and the plate at the point "E" the two swinging arms of the frame "D" came to rest, as shown in figure two (2) of Exhibit "B."

Counsel for Nichols, Shepard & Co. object to the answer referring to Exhibit "B" for reasons before given.

Ques. 27. After this change did the device work successfully?

Ans. 27. It did.

Ques. 28. Who made these drawings, Exhibits "A" and "B"?

Ans. 28. I did.

Ques. 29. What other forms of stops have been used by you than heretofore shown, if any, and, if yea, when first?

Ans. 29. That shown in figure one (1), page five (5), of our illustrated circular. I refer to a circular issued by Marsh, Le Fever & Co. This form of stop was adopted by us in January, 1881.

A circular offered in evidence by Mr. Martin Metcalf, counsel for Marsh, and same marked Marsh's Exhibit "D."

Ques. 30. When was this circular, Exhibit "D," prepared and published?

Ans. 30. It was prepared in March and published early in April, 1881.

Ques. 31. Where was the application of your reversing device to a traction engine made, as testified to by you?

Ans. 31. At the works of Nichols, Shepard & Co., in this city.

638 Further taking of depositions in the above cause adjourned to March 24th, 1882, at 9 o'clock a. m., at my office, in the city of Battle Creek, Michigan.

Dated March 23rd, 1882.

EUGENE M. CONVERSE,
Notary Public, etc.

At the office of Eugene M. Converse, in the city of Battle Creek, Michigan, March 24th, 1882, at 9 o'c. a. m, the taking of depositions in this case resumed pursuant to adjournment had March 23rd, 1882.

Deposition of E. A Marsh Continued.

Ques. 32. What was done with that engine so far as you had anything to do with it?

Ans. 32. That engine was sent to the Illinois State fair, at Springfield, Illinois, and at the St. Louis fair, at St. Louis, Mo., and I think to one or two other fairs. I am positive as to the two fairs mentioned, as I was with the engine and helped exhibit it at those two fairs.

Ques. 33. Do I understand you as stating that you exhibited it at all of these fairs?

Ans. 33. I helped exhibit it at the fairs mentioned, named.

Ques. 34. What was your object in going with and exhibiting it?

Ans. 34. I went at the request of E. C. Nichols, of the firm of Nichols, Shepard & Co.

Ques. 35. Where next did you apply your reversing gear to an engine?

Ans. 35. At the works of Garr, Scott & Co., of Richmond, Indiana, on one of their traction engines.

Ques. 36. When did you do this? The time as near as you can fix it.

Ans. 36. On the 21st of December, 1880.

639 Ques. 37. Was the trial of it satisfactory, if you tried it?

Ans. 37. It was.

Ques. 38. You may go on and state when and where you applied your reversing gear involved in this interference on engines during your absence from home on this trip.

Ans. 38. This Garr, Scott & Co. engine was the only engine I put the device on this trip.

Ques. 39. Where next did you apply your said invention to steam-engines?

Ans. 39. At the works of the Eagle Machine Works, in Indianapolis, Indiana.

Ques. 40. When did you do this?

Ans. 40. On the first or about the first of January, 1881.

Ques. 41. On how many engines, or about how many, did you personally superintend the application of your reversing gear during that and the following months of February and March?

Ans. 41. Two.

Ques. 42. Did you issue licenses to either of the parties for whom you so applied it; and, if so, what parties?

Ans. 42. The Eagle Machine Works aforesaid, to Russell & Co. of Massillon, Ohio.

Ques. 43. Any other?

Ans. 43. I did not apply the device to any others since that time.

Ques. 44. I don't think you understand my question. I mean did you issue licenses to any other parties than the Eagle Machine Works and Russell & Co. up to the first day of April, A. D. 1881?

Ans. 44. I did.

Ques. 45. Name them.

Ans. 45. I haven't got a memorandum of the parties, but to quite a number. Among the parties licensed by me are Garr, Scott & Co., of Richmond, Ind.; Eagle Machine Works of Indianapolis, Ind.; C. Kratz, of Evansville, Ind.; C. & G. Cooper, of Mt. Vernon, Ohio; Russell & Co., of Massillon, Ohio, and about a dozen others.

640 Ques. 46. Have you heard any complaint as to the value of your invention as applied by you at the times and in the places mentioned?

Ans. 46. I have not.

Ques. 47. Please describe the particular machine or reversing gear that you made and applied next after the one at the works of Nichols, Shepard & Co.

Ans. 47. If we take figure two (2) in Exhibit "A" as an illustration of the device which I put on the Garr & Scott engine, it is the same in every respect excepting the adjustable stops "K."

Ques. 48. Did all the trials made by you of your device just testified to prove successful or not?

Ans. 48. They did.

Ques. 49. In adapting and applying your invention to the various styles, forms, and makes of engines now built—traction or otherwise—have you found it necessary or convenient to vary the combinations of your several devices, sometimes involving one or the other of the claims involved in this interference and sometimes using only the claim technically covered by your patent heretofore in evidence, but all requiring for their successful use the substantial embodiment of the principles of construction and mode of operation of your invention as originally and first made and now involved in this interference and the pending application?

Counsel for Nichols, Shepard & Co. objects to the question.

Ans. 49. I have.

Ques. 50. I now call your attention to the stops and wish you to point out precisely their use, and especially how, when, and under what circumstances their use is made available.

Ans. 50. It is an essential feature of this device that it shall have two principal points, at which the frame or swinging arm carrying

the movable wheel and wrist pin shall come to rest. The object of stops is to fix these two points, to prevent any errors which might arise from lost motion or elasticity of the parts.

641 Ques. 51. Is it a fact, then, that your reverser, unlike most if not all others, depends for its successful working on the preservation of a fixed and uniform throw at all times?

Ans. 51. It is.

Ques. 52. Is it or not true that when the reach rod is made sufficiently rigid to operate the valves the stops for engaging the swinging arm carrying the wheel and wrist pin may be dispensed with, or, if used, placed on a quadrant plate at the operator's end of the said reach rod?

Ans. 52. Yes; if the reach rod and the various parts of the device were made sufficiently rigid, then the arrangement just described would do.

Ques. 53. Please state how this is more clearly if you can or have not already done so satisfactory to yourself. State the exact use of the stops, and particularly as to the adjustable stops.

Ans. 23. As before stated, the object of the stops is to fix the throw of the lever; the object of making them adjustable is for convenience in fixing their proper location. Theoretically it doesn't matter whether they are placed so as to engage the swinging arm carrying the movable wheel or placed at the other end of the long reach rod connecting said swinging arm with a secondary lever and quadrant.

Ques. 54. What reason do you assign for not placing the adjustable stops directly on a support near to the reverser, as you had done in the case of the Moon engine, and as you have testified you knew how to do, instead of on the segmental plate or quadrant at the operator's end of the reach rod, when you first applied your invention to a traction engine at the works of Nichols, Shepard & Co.?

Counsel for Nichols, Shepard & Co. objects to the question as stating facts not warranted by the previous testimony of the witness, and objects to any reference being made to the so-called Moon engine.

Ans. 54. As previously stated, theoretically it would not matter whether the stops be placed near to and in connection with the device or at the other end of the long reach rod, and I embraced this opportunity to see what effect their omission would have.

642 Ques. 55. What alteration, if any, would be necessary or desirable to perfectly adapt the Marsh reverser now on the Moon engine, so called by you, to a traction or other horizontal engine?.

Counsel for Nichols, Shepard & Co. objects to the question for reasons before given.

Ans. 55. There might be and are cases where the operator's arm would not be long enough to reach conveniently the device as there shown, and as a matter of convenience a secondary lever might be used and connected by a reach rod, as shown in figure two (2) of Exhibit "A."

Ques. 56. When did you last see the Moon engine and the reversing device with its movable stops attached thereto?

Counsel for Nichols, Shepard & Co. object to question for reasons already stated.

Ans. 56. This morning.

Martin Metcalf, Esq., counsel for Marsh, offers engine called the "Moon engine" in evidence, the same being now in the office of the Nightly Moon.

Ques. 57. Please describe that engine.

Ans. 57. The Moon engine is a small upright engine having my valve gear attached, in which the frame, the swinging frame, has a single arm projecting upwards, which forms a reversing lever that engages with adjustable stops fixed on a quadrant plate near to the device.

Ques. 58. Subsequently to your application to Mr. E. C. Nichols, of the firm of Nichols, Shepard & Co., for his aid and interest in the matter of obtaining a patent before mentioned did you or did you not, in order to facilitate the introduction of your invention involved in this interference, have any interview with him—I mean, now, after the interviews before testified to—for obtaining permission to apply your invention to one of Nichols, Shepard & Co.'s engines?

Ans. 58. I did.

Ques. 59. You may now state what occurred. Go on and state what you wish to in reference to the invention involved in this interference at such interview or interviews.

Counsel for Nichols, Shepard & Co. objects to the question
613 for the reason that it is vague and indefinite.

Ans. 59. Those interviews referred to were interviews had at appointments made by Mr. E. C. Nichols, and were understood to be at the time negotiations on his part for the use of this invention. They were none of them of a satisfactory nature and no agreement made by me granting said E. C. Nichols or Nichols, Shepard & Co. any rights in and to or for the use of my invention.

Ques. 60. Have you brought suit in the United States court for the eastern district of Michigan against that firm for the infringement of your patent, and is that suit now pending?

Counsel for Nichols, Shepard & Co. objects to the question as having no bearing on the case in controversy.

Ans. 60. I have; it is.

Papers offered by Martin Metcalf, Esq., for identification and same marked Marsh's Exhibit "E."

Counsel for Nichols, Shepard & Co. objects to the offering of the paper in evidence, and will move the hon. Commissioner of Patents to exclude the same from the records in this case.

Ques. 61. Is the paper you now hold in your hand, Marsh's

Exhibit "E," a certified copy of the answer of said Nichols, Shepard & Co. to your bill filed in that cause?

Counsel for Nichols, Shepard & Co. objects to all questions in relation to paper offered in evidence marked Exhibit "E" as being irrelevant.

Ans. 61. It is.

Direct examination of E. A. Marsh closed, and by consent of parties the taking of further depositions adjourned to two o'clock p. m. inst.

E. M. CONVERSE,
Notary Public.

At the office of E. M. Converse, in the city of Battle Creek, Michigan, March 24th, 1882, at 2 o'clock p. m., pursuant to adjournment, parties appear.

Counsel for Nichols, Shepard & Co. objects to all the testi-
644 mony of said Marsh and to the exhibits produced as being irrelevant and incompetent, and at the proper time will move the hon. Commissioner of Patents to exclude the same; without waiving said objections proceeds to cross-examine said Marsh.

Cross-examination by counsel for Nichols, Shepard & Co.:

Ques. 1. You state in answer to question twenty-five that you applied one of your reversing gears to a traction engine on the seventh of August, 1880. Will you positively swear that said seventh day of August was the day that you so applied it?

Ans. 1. I do.

Ques. 2. You are sure that there can be no mistake about the date?

Ans. 2. I don't think there can be any question about the date.

Ques. 3. When was the exhibit marked "A" made by you?

Ans. 3. It was about three days ago.

Ques. 4. When was Exhibit "B" made by you?

Ans. 4. About four days ago.

Witness Marsh asks the privilege of correcting his statement in answer to question twenty-five and subsequent statements as to date of first putting his device on a traction engine at Nichols, Shepard & Co.'s works. The date was September 7th, 1880, instead of August 7th, 1880, as stated.

Ques. 5. Was the device you then applied to the traction engine like that shown in letters patent granted to you December 28th, 1880?

Ans. 5. It was substantially, except as to stops placed near the device, engaged with the swinging frame carrying the movable wheel and wrist pin.

Ques. 6. When you first worked said engine were said stops applied?

Ans. 6. They were not applied at that point that I mentioned.

Ques. 7. It was after this time, then, that you first applied the stop, as shown in your application?

Counsel for Marsh objects to the question as leading or misleading.

Ans. 7. It was not.

Ques. 8. Was there more than one trial of this engine made before applying the stops?

Ans. 8. (Witness says:) Please state what stops you refer to.

645 Ques. 9. I refer to the stops referred to by you in answer to cross-interrogatory No. 5.

Ans. 9. There was not to my knowledge more than one trial before I put the adjustable stop on.

Ques. 10. Please state who was present when this test was made.

Ans. 10. There were present Mr. David Shepard, Mr. E. C. Nichols, Mr. Freed Shepard, and a number of others.

Ques. 11. Can you state any others that were present?

Ans. 11. My attention was pretty fully occupied with the test, and although I know there were others there I cannot call to mind who they were.

ELON A. MARSH.

Closed, subscribed, and sworn to before me this 24th day of March, A. D. 1882.

EUGENE M. CONVERSE,
Notary Public.

646 MARTIN E. BROWN, produced as a witness and being sworn by me, does depose and say, in answer to interrogatories to him proposed by MARTIN METCALF, Esqr., counsel for E. A. Marsh, as follows, to wit:

Ques. 1. You may state your name, age, residence and occupation.

Ans. 1. My name is Martin E. Brown; age, twenty-five years; reside in the city of Battle Creek, Calhoun county, and State of Michigan, and am editor and proprietor of the Nightly Moon and the Weekly Citizen.

Ques. 2. Are you acquainted with the parties to this suit?

Ans. 2. I am.

Ques. 3. How long have you been acquainted with them?

Ans. 3. From boyhood; perhaps for ten or twelve years.

Ques. 4. Are you acquainted with the invention of Elon A. Marsh, called a reverser for steam-engines; and, if yea, when did you first become acquainted with it?

Ans. 4. I am. I have used it. I first saw it two (2) years ago the present month.

Ques. 5. In what way did you become acquainted with it?

Ans. 5. I purchased a steam-engine of Mr. Cummings that had his attachment upon it.

Ques. 6. In what year and month did you purchase it?

Ans. 6. I think it was the latter part of March or the first of April, 1880.

Ques. 7. Where is that engine now?

Ans. 7. In my office on Canal street.

Ques. 8. Is there a number to your office?

Ans. 8. It is thirty-nine West Canal street.

647 Ques. 9. Please describe that engine with reverser attached as near as you can.

Ans. 9. It is a small upright boiler and engine. It was originally purchased for a steamboat, and had an ordinary cam reverse movement upon it. Those were taken off and Mr. Marsh attached his invention to it. He experimented upon this engine. The experimenting was done before I bought the engine. He has not experimented any on it since I bought it. I am not versed in mechanics enough to describe the invention. It is a lever *which* with a movable stop attached to the segment of a circle, which regulates the steam.

Ques. 10. I now call your attention to page 13, figure five (5) and ask you this question: Do you recognize in that drawing a representation of any of the features of that reverser? And, if you do, state wherein this is like that one and where it differs from it.

Ans. 10. The principle is the same, excepting *where* upon this segment of a circle a snap-catch is used where on mine there are two (2) movable stops with set-screws.

Ques. 11. Do you or do you not mean to be understood that in this device in lieu of the detent fixing the throw of the lever, in yours, or the Moon engine, there are the movable stops you mentioned having set-screws whereby the throw of the lever could be regulated—shortened or lengthened at will?

Ans. 11. There are such set-screws on my engine.

Ques. 12. You don't quite comprehend my question; I mean, has or has not the reverser or lever which swings on the segment of a circle a handle provided with a thumb-latch or a latch that engages with fixed notches made in the arc or guide-plate on which the lever is moved in reversing the engine?

Counsel for Nichols, Shepard & Co. objects to the question.

Ans. 12. My engine has no such thumb-latch.

Ques. 13. What forms the stop for the lever to rest against when it is thrown from one side to the other?

Ans. 13. A piece of iron formed in the shape of a letter "U," with a set-screw in one of its arms.

Ques. 14. Please examine figure one (1) in this drawing,

648 Marsh's Exhibit "A," and state whether or not therein a substantial or exact representation of the Moon engine reverser, with the said stops as it is now and has been since you have owned and used it.

Counsel for Nichols, Shepard & Co. objects to the question.

Ans. 14. It is an exact representation of the same.

Martin Metcalf, Esqr., counsel for Marsh, offers figure one (1) in

Marsh's Exhibit "A" in evidence as an exact representation of the Moon engine.

Counsel for Nichols, Shepard & Co. objects to the introduction of that exhibit.

Ques. 15. Has any alteration or change been made in that reverser since you have owned and operated it?

Ans. 15. No, sir.

Ques. 16. Have you frequently had occasion to reverse the engine, and has the device always worked successfully or not?

Ans. 16. Yes, sir.

Ques. 17. You mean to answer, then, or to be understood as answering, that it has worked successfully?

Counsel for Nichols, Shepard & Co. objects to question and the entire testimony as being incompetent and irrelevant.

Ans. 17. Yes, sir.

MARTIN E. BROWN.

Taken, subscribed, and sworn to before me this 24th day of March, 1882.

EUGENE M. CONVERSE,
Notary Public.

649 GEORGE W. MARSH, produced as a witness and being duly sworn, does depose and say, in answer to interrogatories proposed to him by MARTIN METCALF, Esqr., counsel for E. A. Marsh, as follows, to wit:

Ques. 1. Please state your name, age, residence, and occupation.

A. 1. My name is George W. Marsh; my age is forty years; reside in the city of Battle Creek, Michigan, and am by occupation a salesman.

Ques. 2. You are a brother of Elon A. Marsh, one of the parties to this suit?

Ans. 2. I am.

Ques. 3. Are you acquainted with Andrew J. Hoag and the firm of Nichols, Shepard & Co., of Battle Creek?

Ans. 3. I am.

Ques. 4. How long have you been acquainted with Hoag?

Ans. 4. I hardly know; I have known him and known of him for the last twenty years.

Ques. 5. Are you acquainted with the invention of Elon A. Marsh, known or styled a reverser for steam-engines? And, if you are, state when and where you first became acquainted with it.

Counsel for Nichols, Shepard & Co. objects to the question.

Ans. 5. I am acquainted with it. I first became acquainted with it two years ago, along in the winter of 1880; I think it was in February. He showed it to me in our store, the store where I am employed.

Ques. 6. Are you acquainted with the invention involved in this interference?

Ans. 6. I am.

650 Ques. 7. When did you first learn of it?

Ans. 7. As I have said, I think it was in February of 1880; he showed me some drawings he had made of it.

Ques. 8. Please examine the drawing, figure one (1), on the paper you hold in your hand and state whether or not you recognize therein the invention as he then exhibited it to you; and, if not, state wherein the invention as shown you at that time differed from this.

Ans. 8. I think this, as near as I can remember. I, not being a machinist, should think it was the same thing.

Ques. 9. Did you ever see a model of the invention referred to; and, if so, when first?

Counsel for Nichols, Shepard & Co. objects to the question.

Ans. 9. I have seen it; saw it in, I think it was, March, in 1880, at Battle Creek Machinery Works, called the Burnham shop.

Ques. 10. What became of that model, if you know?

Ans. 10. It is now in the Moon office, on Canal street, Battle Creek.

Ques. 11. Have you seen it frequently since the time mentioned and the present; and, if so, how frequently?

Ans. 11. For the first five or six months I saw it nearly every day when I was in town. Sometimes I would be out of town for a week.

Ques. 12. Are you acquainted with the principles of construction and mode of operation of the Marsh reversing device as applied to the Moon engine or engine you have referred to?

Ans. 12. Yes; I am.

Ques. 13. Please state if you know when this was made—the reversing device, I mean, not the engine.

Ans. 13. It was in early spring; I think in March, 1880. I paid for the work, I know, myself.

Ques. 14. Have you operated it or seen it operated, and did it reverse the engine successfully or otherwise?

Ans. 14. I both operated it and saw it operated. It did reverse the engine successfully.

651 Ques. 15. I call your particular attention to the devices marked "K," attached to the quadrant plate "P," and ask what uses they are applied to or what purpose did the device there represented serve, as you understood the invention?

Counsel for Nichols, Shepard & Co. objects to the question, as it calls for expert testimony, as the witness has stated that he was not familiar enough with the construction of engines to state how they would work; therefore he is not competent to answer such a question.

Ans. 15. The devices marked "K," as I understood it, were put on the quadrant plate, as you call it, to hold the lever in place when the engine was reversed.

Ques. 16. In the model referred to by you as applied to the Moon

engine, so called, were there or not movable and adjustable blocks provided with set-screws, as represented in the drawing, figure one (1), you now hold in your hands, by which the position of the block "K" might be shifted to any desired point or points of the guide, quadrant plate, for the purpose of regulating the throw of the lever by which the reverser was operated?

Counsel for Nichols, Shepard & Co. objects to the question as leading and for reasons before given, and here desires to state and call the attention of the Hon. Commissioner of Patents to the shape of this as well as other questions propounded to this and other witnesses by the counsel for Marsh, nearly all of which have been leading questions, and he shall move to exclude this testimony for this reason and for other reasons before stated.

Ans. 16. There was adjustable blocks provided with a set-screw to regulate the throw of the lever on the model called the Moon engine at the Moon office now.

GEORGE W. MARSH.

Taken, subscribed, and sworn to before me this 24th day of March, A. D. 1882.

EUGENE M. CONVERSE,
Notary Public.

652 Taking depositions in this case adjourned by consent of parties to March 25th, A. D. 1882, at 9 o'clock a. m., at the office of E. M. Converse, in Battle Creek, Michigan.

March 24th, 1882.

E. M. CONVERSE,
Notary Public.

653 At the office of E. M. Converse, in the city of Battle Creek, Michigan, March 25th, 1882, at 9 o'c. a. m., parties appear pursuant to adjournment had March 24th, 1882. Taking of depositions continued.

GEORGE A. YOUNG, produced as a witness on the part of E. A. Marsh and being duly sworn by me, does depose and say, in answer to interrogatories proposed to him by MARTIN METCALF, Esqr., counsel for E. A. Marsh, as follows, to wit:

Ques. 1. What is your name, age, residence, and occupation? Please state.

Ans. 1. George A. Young; am thirty years old; reside in the city of Battle Creek, Michigan, and am by occupation a machinist.

Ques. 2. Are you acquainted with the parties to this suit, Elon A. Marsh, Andrew J. Hoag, and Nichols, Shepard & Co.?

Ans. 2. I am. I have no personal acquaintance with Mr. Hoag, but I know him by sight.

Ques. 3. Are you acquainted with the invention of Elon A. Marsh involved in this interference?

Ans. 3. I am.

Ques. 4. You may state when and in what manner you became acquainted with it—the invention.

Ans. 4. It was the last of February, 1880.

Ques. 5. You may go on and state where and in what manner you became acquainted with it.

Ans. 5. In the winter of 1879 and '80 there was a class organized for the advancement of machinists, of which I was a member. Mr. Marsh was also a member of the same class. The last of February, 1880, Mr. Marsh made a diagram of his reverse gear or valve gear before the class. It was over Gardner & Gleason's store, on the third floor, in the back room; it was in the Eldred block, in the anteroom of the Red Men's lodge-room at that time.

654 Ques. 6. I now call your attention to figures one (1) and two (2) on a paper marked Marsh's Exhibit "A," and I will ask you this question: Do you recognize in either or both of these drawings the invention then and there communicated to you or illustrated and described?

Counsel for Nichols, Shepard & Co. objects to the question for reasons before given in relation to the introduction of the drawings.

Ans. 6. I do.

Ques. 7. Who made those illustrations, and in what manner was it done?

Ans. 7. Mr. Elon Marsh made the illustration. The first illustration I saw of it was on the blackboard.

Ques. 8. State where.

Ans. 8. At a regular meeting of the class, before the class.

Ques. 9. Did Mr. Marsh make illustrations of his invention in your presence at more than one meeting?

Counsel for Nichols, Shepard & Co. objects to the question as not warranted by the direct examination of Marsh.

Ans. 9. He did.

Ques. 10. Please state whether or not you recognize in the drawing figure one (1) of Exhibit "B" the features of his invention shown at either of those meetings.

Ans. 10. I do.

Ques. 11. Did you ever see a model of this invention? And, if yea, state where and when you first saw it.

Ans. 11. I have; the last of February or first of March, 1880, at Battle Creek Machinery Co.'s shop.

Ques. 12. Please examine figure one (1) of Exhibit "A" and state whether or not you recognize in that drawing you now hold in your hand an exact illustration of the model you then and there saw.

Ans. 12. I do.

Ques. 13. When and where did you last see that model?

Ans. 13. I don't know just when it was; it was the last time I was in the Moon office; it was in that office; perhaps it has been a month since I was in there.

655 Ques. 14. When you last saw it had there been any alteration or change in the reverser on the Moon engine since you

saw it at the Battle Creek Machinery Co.'s shops, so far as you could see?

Ans. 14. There had not.

Counsel for Nichols, Shepard & Co. objects to the testimony of the witness for reasons before stated and will urge the exclusion of the same from the records of this case without waiving any objections whatever.

Cross-examination by counsel for Nichols, Shepard & Co.:

Ques. 1. When Mr. Marsh explained to you his alleged invention what particular part did he claim to have invented?

Ans. 1. The application of the gear to reversing the engine; two (2) movable stops on a segment, a reach rod running from the reverse gear to the forward end of the engine. I think that was all. That is all I remember; the principal points.

Ques. 2. Do you think that your memory is sufficiently good to be able to remember so as to swear positively that he explained all of these points to you?

Ans. 2. It is.

Ques. 3. Was not the device that he explained to you at that time the same as you saw on the so-called Moon engine?

Ans. 3. It was not.

GEORGE A. YOUNG.

Taken, subscribed, and sworn to before me this 25th day of March, A. D. 1882.

EUGENE M. CONVERSE,
Notary Public.

656 MINARD LAFEVER, produced as a witness on behalf of E. A. Marsh, and being duly sworn, does depose and say, in answer to interrogatories proposed to him by MARTIN METCALF, Esqr., counsel for Marsh, as follows:

Ques. 1. What is your name, age, residence, and occupation?

Ans. 1. My name is Minard Lafever; am thirty-five years of age. I reside in the city of Battle Creek, Michigan, and am a machinist.

Ques. 2. Are you acquainted with the parties to this suit?

Ans. 2. Yes, sir.

Ques. 3. How long have you known them?

Ans. 3. Mr. Marsh, I have been acquainted with him several years. The other parties I cannot say. I have been acquainted with them more than two years last fall.

Ques. 4. Who do you refer to when you say the opposite party?

Ans. 4. I refer to Mr. Hoag. I suppose he is the opposite party.

Ques. 5. How long have you been acquainted with Nichols, Shepard & Co., one of the parties of this suit?

Ans. 5. I never was personally acquainted with but one of the members; that was in 1880, a few days after the general election.

Ques. 6. I don't think you quite understand my questions. I

mean how long have you been acquainted with the firm of Nichols, Shepard & Co.?

Ans. 6. I have known of the firm twenty-odd years.

Ques. 7. Are you acquainted with the invention of Elon A. Marsh, styled reversing gear for steam-engines?

Ans. 7. I am.

Ques. 8. When and where did you first learn of it?

Ans. 8. At a meeting of the Society for the Advancement of
657 Machinists in December, 1880.

(On reading over the testimony witness asks to change the date in Ans. to Ques. 8 to "1879" instead of 1880, as therein stated.)

Ques. 9. Where was that meeting held?

Ans. 9. In the room of the society in Eldred block, in this city.

Ques. 10. By whom and in what manner were you made acquainted with it?

Ans. 10. By the inventor, Mr. Marsh; by blackboard illustrations.

Ques. 11. Please examine the illustrations in the drawings on the paper you now hold in your hand and state whether or not you recognize therein the essential features of Marsh's reversing gear for steam-engines as then and there shown.

Counsel for Nichols, Shepard & Co. objects to the examination of the witness on this drawing for reasons before given.

Ans. 11. I do.

Ques. 12. Please proceed and state what occurred at that meeting or subsequent meeting in reference to this invention.

Counsel for Nichols, Shepard & Co. objects to the question as leading and for reason that the witness has not stated that there was any other meetings.

Ans. 12. Mr. Marsh illustrated from the blackboard the essential features in his invention and submitted them to the criticism of the members present. The subject was quite generally canvassed and criticised. Several of the supposed objections were brought out and discussed, but after being explained by Mr. Marsh the invention was considered of practical utility. At other meetings the subject was again discussed and the question of applying the device, especially to traction engines, was discussed and illustrated substantially as represented in this drawing marked figure two (2).

Ques. 13. At how many meetings was this matter of the Marsh invention the subject of discussion?

Ans. 13. The society met weekly and the subject was dis-
658 cussed up to the time and after that time that the model or Moon engine, so called, was taken to the society's rooms.

Ques. 14. When did you first see a model of this invention?

Ans. 14. In the latter part of February, 1880, or about the first of March. I can't state definitely.

Ques. 15. Where did you see it?

Ans. 15. In the shops of the Battle Creek Machinery Co.

Ques. 16. Was that model a working model or otherwise?

Ans. 16. It was a working model.

Ques. 17. What became of it, if you know?

Ans. 17. I helped to carry it from the shop to the room of the Society for the Advancement of Machinists.

Ques. 18. Where next did you see it?

Ans. 18. At the rooms of the before-mentioned society.

Ques. 19. I mean where next after you saw it there, as you heretofore stated?

Ans. 19. I saw it in the office of the Nightly Moon, in the printing office.

Ques. 20. When did you first see it there?

Ans. 20. Either the latter part of April or about the first of May of the same year.

Ques. 21. 1881, you mean?

Ans. 21. Yes.

Ques. 22. I call your particular attention to figure one (1) of Exhibit "A" and ask you whether or not that is an exact representation of the Moon engine.

Ans. 22. As I understand the question, it is.

Ques. 23. I mean do you recognize the essential features of the invention as embodied in the Moon engine exactly shown in that drawing?

Ans. 23. I do.

Ques. 24. Please examine figure one (1) in Marsh's Exhibit "B" and state whether or not you therein recognize the feature
659 of one form of the Marsh reverser for steam-engines that you are acquainted with.

Counsel for Nichols, Shepard & Co. object to examination of witness on these drawings for same reasons stated at examination of previous witnesses.

Ans. 24. I do.

Ques. 25. I now call your particular attention to the movable stops of the Moon engine represented by the letters "K" "K," and also in the drawing figure two (2) of the same exhibit, and ask you this question: Please proceed to point out the advantages attending the use and disadvantages incurred, if any there be, by the use of these stops.

Counsel for Nichols, Shepard & Co. objects to the question for the reason that the witness has not been shown as being competent to testify as an expert.

Ans. 25. The advantages of the adjustable stop marked "K" are the facilities afforded in adjusting the valve motion at the time of its construction and a subsequent adjustment to correct lost motion that may occur from wear. The disadvantage in the adjustable stop "K" is the ease with which it can be altered by an inexperienced person and thereby derange the correct working of the valve motion.

Ques. 26. Are you or not an engine builder, and have you or not been so engaged for many years or been familiar with such and other machinery?

Ans. 26. Yes, sir.

Ques. 27. In what business are you now engaged, and where?

Ans. 27. I am engaged in the construction of reversible traction engines for the Upton Manufacturing Company in this city.

Ques. 28. Previous to your present engagement where and by whom were you employed, and for what purpose?

Ans. 28. I was employed by R. B. Merritt, of this city, as foreman of his machine shop.

Ques. 29. Of what does R. B. Merritt's principal manufactures consist?

Ans. 29. In building portable engines and miscellaneous machine work.

660 Ques. 30. Are you a practical engineer and draughtsman of machinery drawings for working from?

Ans. 30. I am.

By consent, an adjournment taken until 1.30 o'c. p. m., at this office.

EUGENE M. CONVERSE,
Notary Public.

At the office of E. M. Converse, in the city of Battle Creek, Michigan, March 25th, at 1.30 o'clock p. m., pursuant to adjournment, taking of deposition of Minard Lafever continued:

Ques. 31. When did you last see the Marsh reverser at the printing office of the Nightly Moon?

Ans 31. I saw it yesterday.

Ques. 32. Have you seen it and reversed the engine there with it between the time when you first saw it and on yesterday?

Ans. 32. I have.

Ques. 33. State about how often or how many times.

Ans. 33. I can't state definitely. I have reversed it a great many times.

Ques. 34. Did it always work satisfactory or not?

Ans. 34. It did.

Ques. 35. Has any alteration or change been made in this reverser since it was first applied, as you have heretofore testified to, so far as you can discover?

Ans. 35. No, sir.

Ques. 36. Did you ever see any other Marsh reverser applied to a steam-engine, and if, yea, when and where?

661 Counsel for Nichols, Shepard & Co. objects to the question as improper and not warranted by the direct examination of the principal witness.

Ans. 36. I saw the device applied to a traction engine on the premises of Nichols, Shepard & Co., of this city, in the early part of September, 1880. I also saw it applied, applied it myself, at the shops of J. I. Case, Racine, Wisconsin, in the latter part of January and the early part of February, in 1881. Since that, at various times, I have seen the device attached to engines manufactured by

Nichols, Shepard & Co., of this city, and have recently applied it to a traction engine built at the shops of the Upton Manufacturing Co., of this city.

Ques. 37. Have you at the present time any interest in the invention of E. A. Marsh, involved in this present controversy?

Ans. 37. I have.

Ques. 38. Go on and state when it was acquired and the names of the other parties in interest.

Ans. 38. At that time?

Ques. 39. Go on and state when your interest was acquired.

Ans. 39. In the latter part of September, 1880.

Ques. 40. 1880?

Ans. 40. Yes.

Ques. 41. As a party in interest, were you present at an interview or interviews between Mr. Marsh and E. C. Nichols the latter representing the firm of E. C. Nichols & Co., or Nichols, Shepard & Co., at the solicitation of Mr. E. C. Nichols, for the purchase of the right to use or obtaining a license to manufacture and use the Marsh reverser, as involved in this interference?

Counsel for Nichols, Shepard & Co. objects to the question as leading.

Ans. 41. I never attended an interview where Mr. Nichols manifested a desire or intent to purchase the invention or secure a license.

Ques. 42. Did you or not, in company with Mr. Marsh, have interviews with Mr. E. C. Nichols in reference to this invention involved in this interference?

662 Ans. 42. I did.

Ques. 43. When and where the first one?

Ans. 43. At his residence in this city; about the 7th of November, 1880.

Ques. 44. You may state as briefly as you can the substance of what occurred at that interview and who participated.

Ans. 44. He inquired what degree of success attended our efforts to secure a patent. There was apparently no one present but Mr. Nichols and Mr. Marsh. He manifested an interest in Mr. Marsh's success and intimated that that was the object of his interview. He then delineated the up-hill business parties generally met in securing and sustaining a patent, giving a somewhat lengthy outline of the legal difficulties. He mentioned that the valuable patents were generally owned and controlled by a ring or a pool. He further stated that he was a member of a pool that paid an attorney in Washington ten thousand dollars a year to look after their interests; that it was quite often necessary in securing a patent to have the influence of such a pool or such parties; that with his influence and allowing him to frame the claims he could secure the patent good enough for him. He said, however, that he did not care to own the patent; that he did not think N., S. & Co. would use it, but if they chose to use it they would without any regard to a patent or no patent. The meeting then adjourned after a few commonplace remarks.

Counsel for Nichols, Shepard & Co. object to the answer and will move to exclude the same.

Ques. 45. In the commencement of your last answer you stated that there was apparently no one present but Mr. Marsh. You mean besides yourself, I suppose?

Ans. 45. Besides Mr. Nichols and Mr. Marsh and myself.

Ques. 46. What other interviews were had? State when and where and what occurred.

Ans. 46. The next interview at which I were present was the following week, at the shops of R. B. Merritt. Mr. Nichols called at the shop and inquired of me for Mr. Marsh. Mr. Marsh not
663 being there, Mr. Nichols said that I evidently would do as well. He said that he had called to see if you fellows intended to continue on in the matter of that patent or application the way we had commenced, or whether we intended to throw the matter up as far as we had gone and allow him, or rather our folks, as he expressed it, to secure that patent. Not receiving a favorable reply, he endeavored apparently to discourage us in the course that we were taking in the matter by stating that our patent would not be good for anything. Failing in his efforts in that direction, he said that we could not secure a patent. In reply to a question from me as to why we could not he said, Because you can't. Pressing the question, which I did, he stated that he knew that to be the case, because he had analyzed it. I told him that we were analyzing it, and that we would analyze it to the end. He then retired without ceremony.

Ques. 47. Is that printed pamphlet you hold in your hand the business circular of Marsh, Lafever & Scott, printed, published, and circulated for the purpose of advertising and bringing to public notice the merits of the Marsh device for reversing steam-engines involved in this interference during the pendency of the negotiations above referred to? Were you distributing more or less extensively here and elsewhere this printed circular, Marsh's Exhibit "D?"

Counsel for Nichols, Shepard & Co. objects to the question as irrelevant and immaterial.

Ans. 47. Yes, sir.

Ques. 48. About how many of these circulars did you distribute?

Counsel for Nichols, Shepard & Co. object to question same as last above.

Ans. 48. About two hundred and fifty.

Ques. 49. Did you bring suit against the firm of Nichols, Shepard & Co. for the infringement of the Marsh patent, No. 236,052, of date December 28th, 1880?

Counsel for Nichols, Shepard & Co. objects to the question as irrelevant and immaterial.

Ans. 49. We did.

Ques. 50. When was that suit brought?

664 Ans. 50. The latter part of May, 1881.

Ques. 51. Is this paper, Marsh's Exhibit "E," a copy of the answer of Nichols, Shepard & Co. filed in that cause?

Counsel for Nichols, Shepard & Co. object to question as irrelevant and immaterial.

Ans. 51. It is.

Martin Metcalf, Esq., counsel for E. A. Marsh, gives the following notice:

The opposing parties will please take notice that Marsh will introduce at the hearing before the honorable examiner of interferences certain official records of the United States Patent Office, which records will include all models, papers, drawings, and matters therein contained that may appear to have a bearing on the issues involved in this controversy and urge the consideration thereof to the end that justice shall be done.

Counsel for Nichols, Shepard & Co. objects to the notice as not being sufficiently explicit — what papers will be introduced and not being in conformity with the requirements of the rules of the office governing such matters.

Counsel for Nichols, Shepard & Co. further object to the testimony of this witness as improper, irrelevant, incompetent, and immaterial, and he will at the proper time move the hon. Commissioner of Patents to exclude the same.

MINARD LAFEVER.

Taken, subscribed, and sworn to before me this 25th day of March, A. D. 1882.

EUGENE M. CONVERSE,
Notary Public.

665 BATTLE CREEK, *March* 18, 1882.

Andrew J. Hoag, Nichols, Shepard & Co.

GENTLEMEN: Please take notice that in the interference case now pending in the U. S. Patent Office, entitled Marsh *vs.* Hoag, Mr. Marsh will proceed to take his testimony-in-chief before Eugene M. Converse, Esq., at his office, in Battle Creek, Calhoun county, Michigan, on Thursday, March 23rd inst., at three o'clock p. m., and continue from day to day until completed.

His witnesses will be Elon A. Marsh, Minard Lafever, Eli Flagg, Thurlow Case, Martin E. Brown, J. Byers, Geo. Youngs.

You are respectfully invited to be present and cross-examine.

MARTIN METCALF,
Of Attorneys for Marsh.

Due and timely service of the above notice is hereby acknowledged this 21st day of March, 1882.

A. M. SMITH,
Attorney for A. J. Hoag, Assignee, etc.

666 STATE OF MICHIGAN, } ss:
County of Calhoun. }

At the city of Battle Creek, in Calhoun county, State of Michigan, before me personally appeared the above-named Elon A. Marsh, George A. Young, Martin E. Brown, George W. Marsh, and Minard Lafever, and made oath each to the respective depositions by him subscribed that their said depositions contain the truth, the whole truth, and nothing but the truth. The said depositions were taken at the request of Elon A. Marsh, at the time and place named in the notice hereto attached. The taking of said depositions was commenced on the 23rd day of March, A. D., 1882, and continued from day to day, as appears fro m the record, and was closed on the 25th of March, A. D., 1882, said depositions to be used upon the hearing of an interference between the application of E. A. Marsh, filed September 28th, 1881, and the reissued letters patent granted to Nichols, Shepard & Co., assignees of A. J. Hoag, November 29th, 1881, before the Commissioner of Patents. The said Nichols, Shepard & Co., assignees of A. J. Hoag, were duly notified, as appears by the original notice, hereto annexed.

Present at the taking of said depositions: Martin Metcalf, Esqr., attorney and of counsel for E. A. Marsh, and Alex. Mahon, Esq., for and in behalf of Nichols, Shepard & Co., assignees, etc.

EUGENE M. CONVERSE,
Notary Public in and for Calhoun County, Mich.

667 *Index.*

Elon A. Marsh,	testimony	commences	on	page	1
Martin E. Brown,	"	"	"		15
George W. Marsh,	"	"	"		18
George A Young,	"	"	"		22
Minard Lafever,	"	"	"		25

668 EXHIBIT. Dec. 23, 1882. Herschel Whitaker, U. S. Commissioner.

Before the Commissioner of Patents.

WASHINGTON, D. C., *April 12th*, 1882.

In the matter of the interference between the application of Elon A. Marsh for a patent for improvement in reversing gear for steam-engines and reissued letters patent No. 9951, granted November 29th, 1881, to A. J. Hoag, assignor to Nichols, Shepard & Co., now pending before the Commissioner of Patents.

SIR: You are hereby notified that on Wednesday, April 19th, 1882, at the office of E. M. Converse, Esq., Battle Creek, Mich., at three o'clock in the afternoon, we shall proceed to take the testimony of A. J. Hoag, Samuel J. Bradley, A. A. Ellsworth, E. C. Nichols, and David Shepard, all of Battle Creek, Mich., and others, as witnesses in our behalf.

The examination will continue from day to day until completed. You are invited to attend and cross-examine.

NICHOLS, SHEPARD & CO.,
Assignees of A. J. Hoag,
By A. M. SMITH, *Attorney.*

To C. M. Alexander, Esq., attorney for E. A. Marsh.

Service of above notice acknowledged this 12th day of April, 1882.

C. M. ALEXANDER,
Attorney for Marsh.

669 In the matter of the interference between the application of Elon A. Marsh, filed September 28th, 1881, for a patent for improvement in reversing gear for steam-engines and reissued letters patent No. 9951, granted November 29th, 1881, to Nichols, Shepard & Co., assignees of A. J. Hoag, now pending before the Commissioner of Patents.

Depositions of witnesses examined on behalf of Nichols, Shepard & Co., assignees of A. J. Hoag, pursuant to the annexed notice, at the office of E. M. Converse, in the city of Battle Creek, Calhoun county and State of Michigan, on Wednesday, the 19th day of April, A. D. 1882.

Present: Alexander Mahon, Esq., on behalf of Nichols, Shepard & Co., assignees, and Martin Metcalf, Esq., on behalf of Elon A. Marsh.

Andrew J. Hoag.

ANDREW J. HOAG, being duly sworn, does depose and say, in answer to interrogatories proposed to him by ALEXANDER MAHON, Esq., counsel for Nichols, Shepard & Co., assignees, as follows, to wit:

Direct question 1. State your name, age, residence, and occupation.

Answer. Andrew A. Hoag; Battle Creek, Michigan; superintendent for Nichols, Shepard & Co.

Direct Q. 2. Are you the Andrew J. Hoag referred to in the above interference?

A. Yes, sir.

Direct Q. 3. State when you conceived of the invention in controversy and the steps taken by you to perfect the same.

A. The 7th of September, 1880, Marsh came up to the shops of Nichols, Shepard & Co. with the privilege of putting on a reverse gear on a traction engine of Nichols, Shepard & Co., where I was to work at the same time as superintendent of the works. I should say it was about the last of August or the first of September,

670 He was from six to eight days, as near as I can remember, getting the reverse gear upon a traction engine. He came to me and said that he was about ready to operate the engine. He asked me if I could get him a quadrant rod, or it may be called a reach rod. I could not say which he asked me. He went with me to the blacksmith shop. I got a flat bar of steel. I should say, as near as I can remember, it was a quarter inch thick and from an

inch and three-eighths to an inch and a half wide; I couldn't say which. It was a flat bar of steel. This was along towards evening of that day. The next morning the engine was fired up, and he worked nearly all day to try to operate the engine when the traction was applied, and the engine wouldn't move. He came to me that evening and wanted to know if I had a steel shaft. I told him him no, but I had a cold-rolled shaft an inch in diameter. He said that would do. He went with me. I cut a piece off the cold-rolled shaft the length he required. He put it in place of the old rod. The next morning the engine was fired up. He worked nearly till noon [Written on the margin: Marsh says stops put on 8 a. m.] trying to get the engine to move when the traction was applied, and the engine wouldn't stir. I came along just before dinner. Marsh stood out beside of the engine. I asked him how he was getting along. He says, "Damn the thing; it beats me. I don't know what else to do." I stepped upon the platform of the engine. I pulled the throttle open when the traction was applied, and the engine wouldn't move. The thought struck me, if I could hold that sleeve in position that the engine might be moved. I asked Mr. Marsh or Sam. Bradly (I couldn't say which) to move the quadrant lever backwards and forwards. I took my rule out of my pocket; went out to where the valve gear was. I measured the throw of the arm—the projecting arm of the sleeve that one end of reach rod is attached to. I also measured the room under the projecting arm of the sleeve that holds the shaft gear. I then went into the shop, got me a piece of sheet iron and a pair of shears, and came out to the engine and cut me a pattern for the stop. I handed the pattern to Mr. Marsh; told 671 him to go and get me a stop forged the same as the pattern; out of wrought iron I should say it was, as near as I can remember. It was two (2) inches wide and a half inch thick. Mr. Marsh fetched me the wrought-iron stop; gave it to me. I went into the machine shop; got a hole drilled into it for a half-inch set-screw, and I tapped it out for a half-inch set-screw. I went out to the engine with it. I called Mr. Nelson to help me put the stop on. He held the stop while I marked the holes. Mr. Nelson held the stop while I marked the holes on the boiler under the stop. Mr. Nelson helped me put the holes through the boiler and tap the holes out under the projection of the sleeve or shaft-gear box. In putting the stop on I got it a little too far under the projection of the shaft-gear box, so it wouldn't let my arm back into position that the reach rod was attached to, and I had to take the stop off and file out a little on the end. I see at once that there could be another set-screw applied to the stop, but, the time being short, this engine had to go to the Springfield fair, State of Illinois, if the thing would work as it was; that I would let it go until the engine came back. I fired the engine up, gave her steam, applied the traction, and moved her around in front of the main building. I also moved her back in front of the paint shop; pulled the fire out of her; had her drawed into the paint shop for painting. When the engine came back from the fairs I took that stop off from her; put on an adjustable stop

See Rainbow's tes., pages 41 to 43, inclusive.

with set-screws at both ends. All traction engines built by Nichols & Shepard up to this time had a stop with adjustable set-screws.

Direct Q. 4. During the time that you say that Mr. Marsh was experimenting or applying his gear to a traction engine referred to did he ever suggest or intimate a stop, as described by you above?

A. No, sir.

Direct Q. 5. By what means did he propose to hold his lever which controlled his reversing gear?

A. By a quadrant with the lever that the reach rod was
672 connected to, the other end connected to the sleeve, and notches filed into the quadrant to hold a dog, which would slip in the notch fastened to the lever.

Direct Q. 6. How soon after you applied the first stop referred to did you apply the second stop, having adjustable set-screws at each end for controlling the throw of the arm carrying the gear?

A. I should say it was, as near as I can remember, two or three weeks before that engine came back from the fair. When it came back I applied the stop with adjustable set-screws.

Direct Q. 7. Did the first stop that you applied have only one set-screw?

A. It had but one set-screw.

Direct Q. 8. Up to the time that you took hold of this engine, after you say Mr. Marsh gave it up, was there any device at the end where the gearing is located to hold the arm which moves the gear?

A. No, sir.

Direct Q. 9. Then the first time that such a device was suggested or put on was when you did it, as stated in answer to question three (3)?

A. Yes, sir.

Direct Q. 10. The stops as applied by you after the engine returned from the fair are similar to those that have been applied since to the traction engines of Nichols, Shepard & Co.?

A. They are.

Direct Q. 11. Were these stops substantially like those shown by you in your patent of November 29th, 1881—9951?

(Counsel for E. A. Marsh objects to question as incompetent.)

A. They are.

Direct Q. 12. Have similar stops been applied to traction
673 engines of Nichols, Shepard & Co. continuously since the time you first applied the stops on the engine after being returned from the fair?

A. On all traction engines.

Direct Q. 13. You mean on all manufactured by Nichols, Shepard & Co. since that time?

A. Yes, sir.

Cross-examination of A. J. HOAG by MARTIN METCALF, Esq., counsel for E. A. Marsh:

Cross-question 1. Mr. Hoag, you have testified in answer to question three that the engine Mr. Marsh applied his reverse gear upon,

on the 7th day of September, 1880, would not move until you had applied your alleged improvement thereto. Do you positively swear that it would not, and that an engine made and supplied with the device which you have described in the same answer will not and cannot work as a traction engine?

(Counsel for Nichols, Shepard & Co., assignees, objects to the question as misleading, as the witness has not stated the facts as stated by counsel, but has stated that when the traction was applied that that engine would not move.)

A. The engine would not move with the traction applied with Marsh's device.

Cross-Q. 2. Did you never see, before the said 7th day of September, 1880, adjustable stops applied to a Marsh reverser for steam-engines, so called?

A. No, sir; I never did.

Cross-Q. 3. Do you positively swear that you did not, previous to that date, see and critically examine a Marsh reverser applied to a steam-engine doing its effective work in a printing office where is and then was printed a daily paper, the power to do which work was furnished by one engine, to which said Marsh's reverser, with movable and adjustable steps and with set-screws to regulate the throw of the reversing lever, was applied?

(Counsel for Nichols, Shepard & Co., &c., objects to the question as misleading.)

674 A. I don't remember of seeing any such thing.

Cross-Q. 4. Will you swear that you did not see the said engine with adjustable stops applied to a Marsh reverser at work in the office of the Nightly Moon, in this city, before the said seventh day of September, 1880?

(Counsel for Nichols, Shepard & Co., &c., objects to the question as misleading, and that the witness has already answered the question.)

A. I don't remember of ever seeing it before the 7th of September, 1880.

Cross-Q. 5. Did you or did you not visit the office of the Nightly Moon aforesaid once or more than once and with your own hand reverse the engine, bringing the lever, at each movement in so doing, against adjustable stops having set-screws plainly visible; and was not your particular attention called to those adjustable stops long before the said seventh day of September, 1880?

A. No, sir.

Cross-Q. 6. Have you not since that date, and before the filing of your application for a patent involved in this interference, visited the Moon office, worked the said reverser, and learned of its history and what it had been doing for many months prior to your said application?

Counsel for Nichols, Shepard & Co., &c., objects to the question as misleading and as an attempt by counsel for Marsh to bring in facts not warranted by the testimony of Marsh.

Marsh rebutting ans., 2–5.
Brown " ans., 3 & 4, p. 25.

A. No, sir.

Cross-Q. 7. On how many engines has the Marsh reverser, with your alleged improvement applied thereto, been applied up to the first day of May, 1881?

Counsel for Nichols, Shepard & Co. objects to the question as not warranted by the direct examination, the witness having stated that it had been applied to all the traction engines manufactured by Nichols, Shepard & Co., and this question is simply an attempt on the part of the counsel for Marsh to prove facts which
675 may be used in another case which has no bearing on this case; and counsel for Nichols, Shepard & Co., &c., instructs the witness that he need not answer the question unless he sees fit so to do.

A. I couldn't tell you the exact number.

Cross-Q. 8. Was the first reach rod applied by Marsh, about which you have testified, a round rod or otherwise?

A. A flat rod or a flat bar.

Cross-Q. 9. When did you take the first steps looking towards securing a patent on your alleged invention involved in this controversy?

A. I don't know as I understand.

Counsel for Marsh asked that a note be made of the fact that the question has been read over three times.

Cross-Q. 10. Witness please answer the question.

A. I don't know as I understand what they are getting at.

Cross-Q. 11. You filed an application for a patent, did you not?

A. Yes, sir.

Cross-Q. 12. When did you take the first steps towards filing that application?

A. It was some months after the stops were applied to the engine.

Cross-Q. 13. State when, the date, as near as you can.

A. Six to eight months; may be more; I can't state in particular.

Cross-Q. 14. Six to eight months from when?

A. From the 7th of September, 1880; six to eight months or more I said.

See Marsh rebutting ans. 26, p. 7.

Cross-Q. 15. Have you not stated, on one or more occasions, that you did see the adjustable stops on the Marsh reverser of the Moon engine, so called?

A. No, sir.

Cross-Q. 16. Did you not so state and add these words or use language of like import, to wit: I saw them, but they don't amount to nothing?

Counsel for Nichols, Shepard & Co. objects to the question
676 as misleading, and that witness has already stated that he never saw said engine with adjustable stops and set-screws applied.

A. I don't recollect of saying any such thing.

Cross-Q. 17. Do you positively swear that you never did state that

you saw the adjustable stops on the reverser of the Moon engine prior to the said seventh day of September, 1880, or prior to the date of your application for a patent involved in this interference, but that those stops didn't amount to anything, or use words of like import?

A. I never saw the engine with any adjustable stops up to the time of my application for a patent.

(Question repeated.) Witness will please answer the question.

A. I never did.

Cross-Q. 18. Did I understand you correctly or not as stating, in response to cross-question five, that you acknowledged to having visited the Moon office and operated the reverser on that engine, but did not notice any adjustable stops on the said reverser?

(Counsel for Nichols, Shepard & Co., &c., objects to the question as misleading.)

See p. 2, Marsh. See p. 25, Brown.

A. I visited the Moon office about two or three months ago. I didn't put my hand on no lever or touch no piece of machinery. I went to see about newspapers, about business. I went to pay a man for papers—to see about getting papers.

Cross-Q. 19. Did you or did you not, prior to said 7th day of September, 1880, or prior to your said application for a patent involved in this interference, reverse the engine running the printing press in that office?

(Counsel for Nichols, Shepard & Co., &c., objects to the question as having already been answered by the witness.)

A. I did not.

677 By consent of parties, the further taking of depositions adjourned to Thursday, April 20th, 1882, at nine o'clock a. m.

EUGENE M. CONVERSE,
Notary Public.

At the office of E. M. Converse, in the city of Battle Creek, Michigan, April 20th, 1882, at 9 o'clock a. m., taking of depositions resumed, pursuant to an adjournment had April 19th, 1882.

Present: Alex. Mahon, Esq., in behalf of Nichols, Shepard & Co., and Martin Metcalf, Esq., in behalf of E. A. Marsh.

Cross-Q. 20. When and where did you first learn of Marsh's invention in reversing gear for steam-engines, referred to by you in answer to question three (3)?

(Counsel for Nichols, Shepard & Co., &c., objects to the question as misleading and not proper cross-examination of the witness. Attorney for Nichols, Shepard & Co. here states that since this witness was turned over to attorney for Marsh for cross-examination that all questions have been of such a character that it was impossible for the witness to answer the same, and also that said questions have not been proper questions for the cross-examination of the witness, and that the attorney for Nichols, Shepard & Co. calls the particular attention of the Commissioner of Patents to the form of

these questions, and hereby objects to all the cross-examination of this witness as being irrelevant, incompetent, and not proper cross-examination, and, while permitting these questions to be asked at the time without entering any particular objection and only objecting in a general way, he now notifies counsel that he will object to all questions of a similar character, and, if the said counsel for Marsh insists upon this character of cross-examination, that he will do so by making the witness his own.)

678 A. The first reversing gear that I ever saw, Marsh put it on a traction engine at Nichols, Shepard & Co.'s—at the works of Nichols, Shepard & Co.

(Counsel for Mr. Marsh hereby gives notice that he is exercising his undoubted right to cross-examine this witness and strive to get at the true meat and merits of this case, and will endeavor to do so within the requirements of all reasonable rules and without making the witness a witness for Marsh.)

Cross-Q. 21. Did you never see either drawings or a model of Marsh's reverser, as adapted to traction engines, with adjustable stops, before the time you have stated, when he came to the said shops and applied his invention to one of Nichols, Shepard & Co.'s traction engines?

(Counsel for Nichols, Shepard & Co. objects to the question as misleading and for the reasons before given—that is, not being proper cross-examination.)

A. No, sir.

Cross-Q. 22. How many days did Marsh work on and supervise the application of his invention to the first traction engine on which it was tried at the time mentioned by you in answer to question three?

A. He was from six to eight days, or thereabouts, getting the gear on the engine; he was a day and a half a-trying to operate the engine.

Cross-Q. 23. What else did Mr. Marsh do, if anything, at the said shops at the time mentioned besides the work of supervising and applying his invention as aforesaid, as before stated by you?

A. I gave him the sheet-iron pattern of the shops and he went and got it forged and then gave it to me.

Cross-Q. 24. You don't answer my question. I mean now, besides what you have already stated, in short, what was he doing, if anything, while you were making and applying your alleged invention?

A. I couldn't say what he was doing; he was not helping me around the engine, as I remember, at the time the stop was applied.

679 Cross-Q. 25. As superintendent of the shops of Nichols, Shepard & Co., do you know whether or not he was employed or at work on anything else than the one thing of applying his invention in reversing gears to said engine?

Ans. I do not know.

Cross-Q. 26. Will you swear that you don't know?

A. I will not swear that I don't know; my opinion was that he wasn't to work for Nichols, Shepard & Co. at that time.

Cross-Q. 27. Did Mr. Marsh or did he not continue to work on and supervise the application of his reverser to that first traction engine at the said shops of Nichols, Shepard & Co. after the first day's trial and failure?

A. He did not; but they hired him a week or ten days afterwards to go to the Springfield fair, State of Illinois.

(Counsel for Marsh objects to the last part of the answer as not responsive to the question.)

Cross-Q. 28. When was that engine with the Marsh reverser attached shipped to the West for exhibition, as you have stated, if you know?

A. Some time in September.

Cross-Q. 29. State the time more definitely, if you can.

A. I couldn't; it was some time in September; somewhere near the middle.

Cross-Q. 30. Do you consider your memory good?

A. As good as the most of them folks.

Cross-Q. 31. In your direct examination on yesterday your memory did not appear to fail you, whereas now, or on your cross-examination, you don't seem to recall the important dates. How do you account for this?

(Counsel for Nichols, Shepard & Co. objects to the question as stating facts not warranted by the testimony.)

A. My mind wasn't on the time that that engine went to the Springfield fair.

Cross-Q. 32. When did that engine return to Battle Creek from the Western fairs, or how long was it gone?

680 A. It was returned in two or three weeks or more—somewheres about that; I don't remember.

Cross-Q. 33. Will you swear that it wasn't gone twice two weeks?

A. I will not.

Cross-Q. 34. Will you positively swear that it wasn't gone more than a month and a half?

A. The engine went to the Springfield fair, the St. Louis fair, and returned home from the St. Louis fair, as I suppose; it might have been three weeks or more; I can't swear definitely as to the time.

Cross-Q. 35. Please answer my last question—let the question be read over again.

(Before reading the question witness answers:)

A. I can't swear definitely as to the time it came back.

Cross-Q. 36. Is the application of your alleged improvement the same that you have testified to as having applied after the return of the said engine from the Western fairs down to the present time?

A. They be, except a slight improvement in 1882. He says up to the present time (referring to the questioner).

(Attorney for Marsh states that the witness' answer was "improvement made in 1881," and then adds, referring to the questioner, "You said up to the present time," and that he corrects the date to 1882.)

(Counsel for Nichols, Shepard & Co. requests the notary to state whether he took the answer down as given by the witness.)

I, Eugene M. Converse, the notary public taking this deposition, do hereby state in answer to the above request that I took the answer as given by witness as I understood the same.

EUGENE M. CONVERSE,
Notary Public.

681 Cross-Q. 37. When did you next apply the said Marsh reverser, with your alleged improvement added, after the one mentioned by you as having been exhibited at certain Western fairs?

A. In the fall of 1880.

Cross-Q. 38. You have stated that the first one was in the fall or autumn of 1880; I mean now. State the time—day and month, as near as you can—when you applied the said devices to the second engine.

A. I think some time in October—October or November. I can't state positively the time that we commenced putting up traction engines.

Cross-Q. 39. Please describe the reverser in question, as applied to traction engines at the shops of Nichols, Shepard & Co., over which you are superintendent.

(Counsel for Nichols, Shepard & Co. objects to the question as being irrelevant and not proper cross-examination.)

A. Reverse sleeve, which slips upon the main shaft, with a shaft gear attached to the main sleeve; also a sleeve gear on main shaft. This sleeve has a projecting arm, which comes in contact with a stop, with adjustable set-screws at each end of the stop. It also has a projecting arm on top of the sleeve that the reach rod is attached to. That rod extends back to the quadrant fastened to a lever attached to the quadrant, attached to—(witness asks for reading of answer, and says)—to regulate the throw, to rotate the revolving sleeve to its right position. The shaft gear has a pin in it, which the connecting rod attached to the valve—that is, connected to the pin—for to work the valve.

Note this.

Cross-Q. 40. Please describe now the changes made, if any there be, to that reverser down to the present time. I mean that you have made or, rather, that have been made at said shop.

(Counsel for Nichols, Shepard & Co. objects to the question as misleading, and for reasons before given.)

A. In 1882 the projecting arm that holds the shaft gear, a
682 slot cut in the end of the projecting arm that holds the shaft gear, that the stop acts as a guide through the slot, with adjustable set-screws at both ends of the stop.

Cross-Q. 41. When was the change made, the day and month, as near as you can fix it?

A. Some time last September.

Cross-Q. 42. Please state the extent of use of your alleged invention involved in this interference—the number of devices made down to the present time—as near as you can.

(Counsel for Nichols, Shepard & Co. objects to question as improper cross-examination.)

A. If I understand the question, it is only two changes have been made in the stop. I couldn't state the number of engines it has been applied on.

Cross-Q. 43. Are not the engines numbered consecutively as finished—that is, those having these reverse gears attached?

(Counsel for Nichols, Shepard & Co. objects to question for reasons before given.)

A. All engines are numbered.

Cross-Q. 44. As superintendent of the manufactory of Nichols, Shepard & Co., do you not know very nearly the number of Marsh reversers with your alleged improvements attached?

(Counsel for Nichols, Shepard & Co. objects to the question as not proper cross-examination, and states that these questions are asked for the purpose of bringing out facts in another case, and if the attorney insists upon them the attorney for Nichols, S. & Co. must instruct the witness not to answer.)

(Counsel for Marsh desires to state that the witness Hoag, in both his sworn preliminary statement and his testimony heretofore given in this case, states that his said alleged improvement has been placed on all traction engines manufactured by said Nichols, Shepard & Co. since the first one was applied down to the present time, and he holds—he, the said attorney for Marsh, holds—that, the extent of use not heretofore appearing, it becomes a legitimate
683 subject of inquiry and proper cross-examination under both the law and the rules of practice in the Patent Office in such cases.)

A. I couldn't say the number positively.

Cross-Q. 45. When you first applied your said alleged improvement to the Marsh reverser—at the time and place heretofore mentioned by you—was any one else present besides yourself and the Mr. Nelson you have named?

A. Nobody present to my present knowledge; nobody.

By consent of parties, the further taking of depositions adjourned to two and one-half o'clock p. m., April 20th, 1882.

EUGENE M. CONVERSE,
Notary Public.

[SEAL.]

At the office of E. M. Converse, in the city of Battle Creek, Michigan, at 2.40 o'clock p. m., taking of depositions resumed.

Cross-examination of ANDREW J. HOAG continued:

Cross-Q. 46. At whose instance and suggestion, if other than your own, was your alleged improvement made and a patent applied for?

(Counsel for Nichols, Shepard & Co. objects to the question as misleading.)

A. I am the man that invented the patent. E. C. Nichols applied for a patent.

Cross-Q. 47. At whose suggestion was the improvement made, if other than your own?

A. Nobody else.

Cross-Q. 48. At whose suggestion was a patent applied for, if other than your own?

A. Andrew J. Hoag, in behalf of Nichols, Shepard & Co.

See bill of defense.

Cross-Q. 49. When was the idea of applying for a patent first suggested to your mind?

A. Right after the stop was put on the first traction engine. We have talked about it for several months.

684 Cross-Q. 50. What pecuniary consideration, if any, was promised you or agreed on in case you would apply for a patent?

(Counsel for Nichols, Shepard & Co. objects to the question as incompetent and not proper cross-examination, and states to the witness that he must not answer the question.)

A. Not any.

Cross-examination closed.

Redirect examination of ANDREW J. HOAG by ALEXANDER MAHON, Esq., on behalf of Nichols, Shepard & Co.:

Redirect Question 1. Were the adjustable stops as applied to the engine referred to as having been to the fair and as having been applied on the return of the engine from the fair the same as shown in letters patent granted to Nichols, Shepard & Co. as your assignee?

A. Yes.

Redirect Q. 2. In applying your device to traction engines have you applied it to as many as twenty-five engines?

A. Yes.

Redirect examination closed.

Recross-examination by MARTIN METCALF, Esq.:

Recross-question 1. Any more than twenty-five? State the number as near as you can.

Answer. I couldn't say how many.

Recross-Q. 2. Can you say that you have applied it to one hundred?

A. I think I could.

Recross-Q. 3. Can't you fix the number within one hundred?

Please state the extent of use as near as you can and as near as your knowledge, as superintendent of Nichols, Shepard & Co.'s shops, enables you to do.

A. I couldn't state the number.

685 Recross-Q. 4. Do you positively swear that you cannot fix the number within one hundred?

A. I do not.

Recross-Q. 5. Then why don't you answer my question?

(Counsel for Nichols, Shepard & Co. objects to these questions for the reason that the witness, having stated that his improvement has been applied to at least one hundred engines—that demonstrating its practicability and also sufficient use of the invention—that these questions are put simply to inquire into the private affairs of Nichols, Shepard & Co., which have no bearing on the case and no right to be brought into it, and that he instructs the witness that he need not answer the question.)

(Counsel for Marsh desires to state that he utterly disclaims the intention attributed to him by counsel on the other side, and that his sole purpose is and has been to bring to light the extent of use and the reliability of the witness' memory and knowledge of the subject whereof he seeks to testify.)

A. I don't know how many engines that reverse gear has been put on.

ANDREW J. HOAG.

Subscribed and sworn to before me this 20th day of April, A. D. 1882.

EUGENE M. CONVERSE,
[SEAL.] *Notary Public.*

686 *Samuel Bradley.*

SAMUEL BRADLEY, produced as a witness on behalf of Nichols, Shepard & Co., assignees, &c., and being by me duly sworn, doth depose and say, in answer to interrogatories proposed to him by ALEX. MAHON, Esq., counsel for Nichols, Shepard & Co., assignees, &c., as follows, to wit:

Direct Question 1. State your name, age, residence, and occupation.

Answer. My name is Samuel Bradley; thirty-nine years old; residence, city of Battle Creek, Calhoun county, Michigan; at present I am an engineer.

Direct Q. 2. Are you acquainted with Andrew J. Hoag, one of the parties to this interference; and, if so, how long have you known him?

A. I am. I have known him about eight years.

Direct Q. 3. Are you acquainted or have you any knowledge of an invention made by said Hoag in relation to traction engines?

A. I have.

Direct Q. 4. State when and under what circumstances you first obtained knowledge of this invention.

A. I saw him making a pattern for a stop about the first of September, 1880, at Nichols & Shepard's to put on an engine that had Marsh's reverse gear on that Marsh could not make work. That is all, I believe, to the question.

Direct Q. 5. How do you know that Mr. Marsh could not make his device work?

A. He had worked at it a day and a half, and I heard him say to Mr. Hoag, "Damn the thing, it has got the best of me; I don't know what to do next," or words to that effect.

Direct Q. 6. Please state what further, if anything, you know in relation to the application by Mr. Hoag of the device to an engine.

687 A. Mr. Hoag said to Mr. Marsh, "Will you reverse the engine, or the lever, rather, backwards and forwards to let me see how much the throw is to the valve gear?" Marsh done so. Mr. Hoag measured it with his rule, went in the shop and got a piece of sheet iron and a pair of shears and cut out a pattern; tried it on the boiler under the stop—I mean under the sleeve. Marsh moved the lever backwards and forwards until Hoag got the pattern to suit him. He gave the pattern to Marsh. He told him to go to the blacksmith shop and get one forged out of wrought iron, like the pattern. That is all I knew about it at that time. I was sent away then.

Direct Q. 7. When was the next time you heard of or saw this engine, and under what circumstances, if ever?

A. When I came home, about a week or ten days after that, I saw it in the paint shop at Nichols & Shepard's. Mr. Marsh asked me in there to see the engine, as we were going to the fair with it. He said to me, "That stop that Jack put on there helped me out nicely. The engine worked as well as any engine could," or words to that effect. That is all.

Direct Q. 8. What was this stop that you refer to?

A. It was a piece of wrought iron, I should think, about two inches wide, something in the shape of an L, a set-screw on top of it and a notch at one end. This was bolted to the boiler. That is all.

Direct Q. 9. Did you go to the fair with this engine?

A. Yes, sir.

Direct Q. 10. How long were you away to the fair or fairs with it? State as near as you can.

A. A little over two weeks.

Direct Q. 11. Who went with you to the fair with the engine?

A. Mr. Marsh and Mr. John B. Ellsworth.

Direct Q. 12. During any of the time you were with Mr. Marsh at the fair or fairs did he ever claim to have put this stop upon the engine or claim that it was his invention—this stop, I mean?

688 A. No, sir; he always alluded to it as Hoag's to me—that is, while we were at the fair; that is all.

Direct Q. 13. Did you or not see Mr. Marsh operate the engine or try to operate the engine before Mr. Hoag started to make the pattern for the stop?

A. Yes, sir; I did.

Direct Q. 14. State any circumstances which you may know of in relation to this matter of Mr. Marsh's attempt to operate the engine.

A. After he had put his valve gear on the engine he asked Mr. Hoag for a bar for a reach rod to reverse the engine with. Mr. Hoag got him a flat bar of iron or steel about a quarter or three-eighths thick and about an inch and a half wide, I should think. He put that on the engine, fired it up the next morning, and tried to move the engine with the traction applied. He couldn't get a revolution of the fly-wheel either way. He worked with it nearly all day. He then asked Mr. Hoag if he had a round steel bar about an inch in diameter or such a matter. Hoag told him he hadn't no steel bar, but he had a cold-rolled shaft an inch in diameter. Marsh said he thought that would do. They went and got that and Marsh put it on the engine that night, I think. The next morning they fired up the engine—Marsh fired up the engine the next morning (I don't know whether I said he or they), and he worked at it until nearly noon. Hoag came out to the engine — says, "Marsh, how do you get along?" Marsh says, "D——n the thing, it has got the best of me," or something of that kind. The engine didn't work any better with a cold-rolled shaft than it did with a flat one. That is all.

Direct Q. 15. What was this rod attached to?

A. One end to the reverse sleeve, the other to a lever attached to a quadrant.

Direct Q. 16. How was this lever connected to the quadrant?

A. Notches in the quadrant and a spring latch on the lever.

689 Direct Q. 17. What day did you go to the fair?

A. I don't remember the day; it was the last of September—the very last.

Direct examination of Samuel Bradley closed.

Cross-examination of SAMUEL BRADLEY by MARTIN METCALF, Esq., attorney for E. A. Marsh:

Cross-question 1. Mr. Bradley, did you ever see or hear of an adjustable stop applied to a Marsh reverser for steam-engines before the time you have stated as the time when Mr. Hoag put the stops on a traction-engine reverser at the shops of Nichols, Shepard & Co.?

(Counsel for Nichols, Shepard & Co. objects to the question as not proper cross-examination.)

Answer. No, sir; I never did.

Cross-Q. 2. Have you or not been present during the time of the examination of the witness, Andrew J. Hoag?

A. Yes, sir; I have.

Cross-Q. 3. And also during the reading over to said witness of his testimony?

A. Yes, sir.

Cross-Q. 4. Are you not now and have you not been for some time past in the employ of Nichols, Shepard & Co.?

A. I have.

Cross-Q. 5. State how long.

(Counsel for Nichols, Shepard & Co. objects to these questions and makes the statement that the examination of the witness was closed, and counsel for Marsh stated that he had closed his cross-examination and it was so entered of record by the officer taking the testimony; that the witness was then turned over to the officer so that he might read his testimony to him before being signed; that the counsel for Nichols, Shepard & Co., knowing that this would take a short time, stepped into an adjoining room, the door being closed; that the said attorney for Marsh then started to cross-examine
690 the witness, which he had no right to do after having closed his cross-examination, and even if he had such a right professional courtesy would have required his calling the opposing counsel before proceeding to further cross-examination of the witness.)

(I, Eugene M. Converse, the notary public before whom the foregoing deposition of Samuel Bradley was taken, do hereby state (in answer to a request by counsel for Nichols, Shepard & Co. that I make a statement of what record I made at the close of the deposition of Samuel Bradley before reading the deposition to witness, etc.) that after cross-question No. 3 was answered Martin Metcalf, Esq., who conducted the cross-examination of Samuel Bradley, announced that he was through with the witness, and I then endorsed on the record the following words: "Cross-examination of Samuel Bradley by Martin Metcalf, Esq., closed." And after reading the deposition to witness Martin Metcalf, Esq., counsel for Marsh, said that he wanted to ask the witness more questions, and I run a line through the endorsement I had made, as above written.

EUGENE M. CONVERSE,
Notary Public.)

(Counsel for Marsh desires to state that he had no knowledge that the recording officer had entered of record the examination of the witness, Bradley, closed when he entered the room, from which he had been absent for some little time during the reading over of the testimony of the witness, and when he returned the said reading was nearly completed; that when he put the question, following question, cross-question three, he was not mindful of the absence from the room of the attorney for Hoag, but as soon as his attention was directed to the fact, and that the examination had been closed of record, he, the said attorney for Marsh, stated to the recording clerk that although it was a practice in similar cases with which he had knowledge to accord to counsel on both sides, each to the
691 other, by way of courtesy, the privilege to ask a question or two that is frequently suggested during the reading and before the signing the deposition by the witness, that perhaps it might be well to wait the return of Mr. Mahon, counsel for Hoag—which latter remark the officer taking the testimony states he did

not hear. Mr. Metcalf, of counsel and attorney for Marsh, freely accords to counsel on the other side the undoubted right to object to further questions if they so choose to do, and Mr. Metcalf, counsel for Marsh, here and now, for himself, expressly disclaims any intentional discourtesy to said counsel for Hoag, or that he sought for or desired to obtain any undue advantage in the direction complained of; he only acted under the impulse of the moment, founded on the practice heretofore had in similar cases; that the recording clerk, Mr. Converse, failed to catch the remark of Mr. Metcalf as to the absence of Mr. Mahon, as he claims, is fairly presumed and believed, for which reasons Mr. Metcalf hereby withdraws the proposed further questions, for reasons already sufficiently stated. Hereafter, in this case and others, Mr. Metcalf will try and take due and timely notice of the absence from examiner's room of counsel on the other side to see a man or for any other purpose.)

SAMUEL BRADLEY.

Taken, subscribed, and sworn to before me this 20th day of April, A. D. 1882.

EUGENE M. CONVERSE,
[SEAL.] *Notary Public.*

By consent of parties, the taking of further depositions in this cause adjourned to April 21st, 1882, at 9 o'clock a. m.

EUGENE M. CONVERSE,
Notary Public.

692 At the office of E. M. Converse, in the city of Battle Creek, Calhoun county, Michigan, Friday, April 21, 1882, at 9 o'clock a. m., taking of depositions on part of Nichols, Shepard & Co., &c., resumed, pursuant to adjournment had April 20, 1882.

Charles King Nelson.

CHARLES KING NELSON, produced as a witness on part of Nichols, Shepard & Co., and being first by me duly sworn to testify the truth, the whole truth, and nothing but the truth, doth depose and say, in answer to interrogatories proposed to him by ALEXANDER MAHON, Esq., on behalf of Nichols, Shepard & Co., as follows:

Direct Question 1. State your name, age, residence, and occupation.

Answer. Charles King Nelson; residence, Battle Creek, Michigan; foreman of Nichols, Shepard & Co.'s planing mill; am 35 years of age.

Direct Q. 2. Are you acquainted with A. J. Hoag, one of the parties to this interference; and, if so, how long have you known him?

A. I have been acquainted with Mr. Hoag over twelve years.

Direct Q. 3. Do you know anything in relation to an invention made by Mr. Hoag for improvement in reverse gears for traction engines; and, if yes, when did you first become acquainted with it?

A. I helped Mr. Hoag put his improvement on a boiler in the fall of 1880, while the shops were shut down.

Direct Q. 4. What did this improvement consist in?

A. It consisted of a flat piece of iron—wrought iron—about two inches wide, half inch thick, and bent at a right angle at one end.

Direct Q. 5. What was this used for?

A. It was used for holding Mr. Marsh's reverser in position.

693 Direct Q. 6. Now, please state any facts which you may know in relation to this improvement.

A. Mr. Hoag called me to hold this stop in position on the boiler while he marked the holes for two cap screws. Mr. Hoag punched one hole through the boiler; asked me to punch the other—the hole nearest to the main shaft—while he went after two cap screws and a tap. Mr. Hoag tapped out the holes, and I helped him bolt the piece to the boiler. In placing this piece on the boiler it was placed too far ahead, and Mr. Hoag had to take it off and chip off the outer end. He remarked to me that if he only had time he might put a set-screw on this end to save chipping it off.

(Counsel for Marsh objects to the answer as incompetent, uncalled for, and not warranted either by the question or the testimony of Hoag.)

Direct Q. 7. You state in your answer above that Mr. Hoag said that he might put a sets-crew at this end. What, if anything, was used at the other end?

A. A set-screw.

Direct Q. 8. What was this stop used for?

(Counsel for Marsh objects to the question, as witness has already answered the question.)

A. To hold Mr. Marsh's reverser in position, as it would not work with the traction attachment applied.

Direct Q. 9. You say Mr. Marsh's reverser. Was Mr. Marsh applying at that time a reverser to a traction engine?

A. Yes, sir.

Direct Q. 10. Now, state any facts that you may know in relation — Mr. Marsh in reference to the application of this reverser to the engine.

(Counsel for Marsh objects to the question as misleading and indefinite.)

A. 10. Mr. Marsh tried to move the engine with the traction applied, but could not do so, as the reach rod was not stiff enough to hold the reverser in position. He asked Mr. Hoag for a stiffer bar or rod; asked him if he had a bar of inch-round steel. Mr.

694 Hoag said he had cold-rolled shafting inch in diameter. Mr. Marsh said that would do. After this shaft was fitted and the engine fired up the next morning the engine still refused to work with the traction attachment applied.

Direct Q. 11. How long was Mr. Marsh trying to make his reverser work before Mr. Hoag applied this stop?

A. He was about a day and a half.

Direct Q. 12. Did the engine operate and work? Did the engine work with the traction applied after Mr. Hoag had applied this stop?

A. Yes, sir.

Direct Q. 13. Did it work before this device was applied and the traction was thrown into gear?

A. No, sir; it would not work.

Direct Q. 14. Did any one except Mr. Hoag assist you or help in any manner to put on this stop?

A. No, sir.

Direct Q. 15. How did you happen to be around at the time this engine was being tried?

(Counsel for Marsh objects to question as immaterial.)

A. I was repairing machinery in my shop at that time, and was back and forth between my shop and the engine both days.

Cross-examination of CHARLES KING NELSON by MARTIN METCALF, Esq., counsel for Marsh:

Cross-question 1. Mr. Nelson, had Mr. Marsh gone away, home, or left the works of Nichols, Shepard & Co. and abandoned his experimental trial of his reverser as applied, or was he there engaged in applying it to a traction engine, or where was he, if you know, at the time you have stated when you helped Mr. Hoag apply his alleged improvement?

(Counsel for Nichols, Shepard & Co. object to the question as misleading, and that it is impossible for the witness to answer this question, as it contains so many clauses; that the witness
695 might answer yes or no; and counsel here called attention of the office again to this form of question as made by counsel for Marsh during this examination as being simply an attempt to mislead the witness, and, further, that it is not proper cross-examination.)

A. I can't answer that question in its present form.

Cross-Q. 2. Do you swear that you do not know whether Mr. Marsh was present and about the works or not?

A. Mr. Marsh was not present when I helped Mr. Hoag apply his stop to the boiler. I don't know whether he was about the works or not.

Cross-Q. 3. Please state the day and month when you helped Mr. Hoag, as you have just testified.

A. It was in the first part of September; can't recall the exact day of the month.

Cross-Q. 4. When the successful trial of the Marsh reverser with the alleged Hoag improvement added took place was Mr. Marsh present or about the works or not? If you know, please state.

(Counsel for Nichols, Shepard & Co. objects to the question as not proper cross-examination.)

A. I cannot state positively whether he was present or not; saw Mr. Hoag operate the engine—run it around in front of the main building and back to the paint shop door.

(All after the words "present or not," in answer to the question, is objected to by counsel for Marsh as not responsive to the question and an evident evasion thereof, to which he hereby calls special attention.)

Cross-Q. 5. Witness will confine himself to the question. Who was present besides yourself and Mr. Hoag when you helped him apply his improvement, as testified to by you?

A. There was no one besides Mr. Hoag and myself present.

Cross-Q. 6. Who was present at the first successful trial?

A. Mr. Hoag and myself. I don't remember who else.

Cross-Q. 7. Will you positively swear that Mr. Marsh was not present at the time the stop plate was fitted to and put on the said boiler and engine?

696 A. I positively swear that Mr. Marsh was not present when we put the stop on the boiler.

Cross-Q. 8. What was the size of the holes that were tapped in the boiler about which you have testified?

(Counsel for Nichols, Shepard & Co. objects to the question as having no bearing upon the point in issue and as being entirely irrelevant and immaterial.)

A. I do not remember the exact size.

Cross-Q. 9. How many holes were drilled in the boiler or punched for attaching the stop plate about which you have testified?

(Counsel for Nichols, Shepard & Co. objects to the question for reasons before given in previous questions.)

A. Two.

Cross-Q. 10. Were these holes at right angles to the engine shaft or otherwise? Please state.

(Counsel for Nichols, Shepard & Co. objects to the question for reasons before given to previous questions.)

A. They were at right angles or very nearly so to the main shaft of the engine.

CHARLES KING NELSON.

Taken, subscribed, and sworn to before me this 21st day of April, A. D. 1882.

[SEAL.] EUGENE M. CONVERSE,
Notary Public.

The taking of further depositions in this cause adjourned by consent of parties to two o'clock p. m. instant.

EUGENE M. CONVERSE,
Notary Public.

697 Taking of depositions resumed in this case at two o'clock p. m., April 21st, 1882, at the office of E. M. Converse, in Battle Creek city, Michigan.

Present: Alexander Mahon, Esq., on behalf of Nichols, Shepard & Co., and Martin Metcalf, Esq., on behalf of Marsh.

Edwin C. Nichols.

EDWIN C. NICHOLS, produced as a witness on behalf of Nichols, Shepard & Co., and being by me first duly sworn, does depose and say, in answer to interrogatories proposed to him by Alexander Mahon, Esq., as follows:

Direct question 1. State your name, age, residence, and occupation.

Answer. Edwin C. Nichols; forty-three years old; residence, Battle Creek, Michigan; occupation, secretary and treasurer of Nichols, Shepard & Co.

Direct Q. 2. Are you acquainted with Andrew J. Hoag, one of the parties to this interference; and, if so, how long have you known him?

A. Yes; I have known him about fifteen years.

Direct Q. 3. Do you know anything in relation to an invention made by Mr. Hoag for improvement on traction engines?

A. Yes; I have some knowledge on that subject.

Direct Q. 4. Now, please state what you understand the invention to be and when you first obtained a knowledge of it.

A. I understand the invention to be a device in the form of a stop or stops for the purpose of fixing and regulating the movements of a reversing gear. My first knowledge of this invention was acquired in the early part of September, 1880.

Direct Q. 5. How did you obtain a knowledge of it and under what circumstances?

698 A. To begin at the beginning, Mr. Elon A. Marsh called on me at my office, at the works of Nichols, Shepard & Co. in this city, some time in the early spring of 1880. He showed me at that time a drawing of a device that he claimed would operate nicely as a valve gear, and also could be made to reverse an engine. I examined the drawing with some interest, but not being familiar with that method or principle of reverse action as applied to a valve, I gave no decided opinion upon it, but expressed a friendly interest in the subject, and after a friendly talk Mr. Marsh went away. Not long afterwards Mr. Marsh called on me again, showed me a little model of the valve gear and reversing device, and this time I examined it more intelligently and attentively than before. Mr. Marsh explained the principle by which the reverse was accomplished and shortly afterwards left me, after we had had a pleasant interview, in which I had expressed a friendly personal feeling toward him and a hope and a desire that the device would do all he claimed or expected. Some time in August Mr. Marsh called upon me again and wanted me to in some way take hold of the invention or device with him, and especially desired that I would permit him to put one of these valve-gears and reversing devices on one of Nichols, Shepard &

Co.'s engines, that he might show its practical value. After some talk, in which I expressed a desire to favor him as far as possible, I agreed that he might come to the factory of Nichols, Shepard & Co. and make the patterns, and do such other work connected with the getting up of this device as he could without charge to us for his labor or services during that time, and that we would make the castings—I mean by "we" Nichols, Shepard & Co.—and do the fitting, boring, and turning and furnish the material, and also would furnish an engine on which the device could be placed. Mr. Marsh expressed great satisfaction for this privilege, and along in the latter days of August he came to the factory and proceeded to do the work assigned him. After working about a week the device was made and placed on one of our traction engines—I mean, of course,
699 one of Nichols, Shepard & Co.'s traction engines. This engine was fixed up and was worked with all that day—that is, the day on which it was first fixed up after this device was thus placed upon it. I felt a deep interest in the matter of the operation of this engine, inasmuch as I had authorized the application of the device, and our company had, of course, expended considerable money and been to some expense and trouble in the matter, and therefore I watched its operation carefully during that day on which it was first tested. I visited it very frequently during the day, and I was disappointed to see that the device utterly failed to work, or, rather, that the engine with this device as thus applied utterly failed to work as a traction engine. Mr. Marsh expressed his disappointment and surprise at the failure equally as much, I think, and more than I did. He worked at it and with it faithfully during that entire day, but still the engine utterly refused to propel itself. Toward the close of the day Mr. Marsh told me that he had made up his mind that the difficulty lay in the fact that the reach rod extending from the swinging frame to the quadrant lever was insufficient and not sufficiently rigid. He proposed, he said, to substitute a stronger and more rigid reach rod for the one then in use and he felt confident that would remedy the difficulty. I saw the engine the next morning after Mr. Marsh had substituted the second reach rod before referred to. The engine was fired up and the traction gears applied or put in mesh or gear, and the engine still refused to work at all as a traction engine or to propel itself. I visted the engine several times during the forenoon of that day. Mr. Marsh was laboring with it, apparently doing everything he could to remedy the difficulty, but without any success whatever, and he expressed himself to me as very much discouraged and very much surprised over the results, or rather lack of results, achieved. I called his attention to the fact that this engine was the only traction engine that we had at that time disengaged or in shape to send to the Springfield and St. Louis fairs, and that it was important that it be made to work, if possi-
700 ble, as the time was short in which to fit it up and paint it in a suitable manner for fair purposes. He kept at work tinkering and working at the engine until nearly noon, and when I left it, about eleven o'clock in the forenoon, it seemed to be a total

failure, and Mr. Marsh seemed and expressed himself to me as thoroughly discouraged with its operation. I saw the engine again in the afternoon of that day and I saw Mr. Hoag, Mr. Nelson, and Mr. Bradley working over it, but I did not pay any particular attention to what they were doing. The next day my attention was called to it again by some one coming into the office and calling me to come out and see that engine. The engine then stood in front of the main building of the works, having been moved from its former position (which was in the rear of the main building). The engine was at this time steamed up and several parties were gathered about it. Mr. Hoag was there and Mr. Marsh was also there. Mr. Hoag called my particular attention to the fact that the engine would now propel itself on the road, and, upon my inquiry as to what had been done to it to bring about this result, called my particular attention to a device which he had placed upon it. He pointed it out, and I stood with him, beside him, while he did so, and saw what it was. He spoke of it as a thing which he had put upon this engine the preceding afternoon.

Mr. Marsh stood by while Hoag was explaining to me the device which he, Hoag, had placed on the boiler or engine.

The engine was started up and propelled itself around the building toward the paint shop. This particular device to which Hoag called my attention consisted of a bar of wrought iron bent into a peculiar shape, with a set-screw at one end, upon which the swinging arm carrying the valve gear rested when the said swinging arm was in its lowest or extreme downward position. The other end of this wrought-iron bar was so placed that the projecting arm of the
701 sleeve to which the reach rod was attached came in contact and rested against this end of the wrought-iron bar when the swinging arm was in its extreme upward position.

[On the margin: Lie; wasn't so made at first.]

Direct Q. 6. What was done with this engine?

A. It was sent to the Springfield and St. Louis fairs.

Direct Q. 7 About what time, if ever, was it returned to this city?

A. I think about the middle of October.

Direct Q. 8. Were there any changes made in this engine after its return; and, if yea, what were they?

A. Previous to the return of the engine Mr. Hoag talked with me further about this device which he had applied, and explained to me that it was not in the best or most convenient form in which he could apply it, and he said that when the engine came back he wanted to change the form of the device to make it, as he thought, better or more convenient, and he proposed to me that when the engine returned he should do so, to which I assented. He explained that he would apply a casting instead of the wrought-iron bar, in in which casting he would place two set-screws, one at each end of the casting, and get his permanent support and adjustment of the swinging arm thereby. I assented to this, and shortly after the return of the engine I saw him at work upon it, and soon after I saw

the new device, or rather the improved device, substantially as he had explained it.

(Counsel for Marsh objects to the answer to this question, as well as the last one before this one, on the ground that a great deal of irrelevant matter, and not competent, is sought to be injected, not responsive to the questions propounded, the particulars in these lengthy answers being scattered all over this loose kind of testimony, and Mr. Metcalf, of counsel and attorney for Marsh, hereby calls the particular attention of the hon. Commissioner of Patents thereto.)

Direct Q. 9. Please state, as near as you can, when you saw this device described by you in answer eight applied to an engine, if ever.

702 A. I think it was toward the latter part of October. It was very soon after the return of the engine from the St. Louis fair.

Direct Q. 10. Was this device like that shown in letters patent granted to Hoag, assignor, &c., reissued November 29th, 1881, No. 9951?

A. It was.

(Attorney for Marsh says, "Stop!" and witness says, "Consider that not spoken.")

(Counsel for Marsh requests that a true record be made. After the notary had asked of Metcalf if he should read the question Metcalf answered, "Yes," and then, "Stop!" This was said by the said attorney for Marsh for the purpose of allowing an objection to be recorded in its proper place, but witness instantly answered, and the said notary insisted on recording the answer of witness before that of the objection, which had already been partially formulated and is now made as follows:)

(Counsel for Marsh objects to the question and any reference made whatever to the patent, unless the same be offered in evidence.)

A. It was.

By consent of parties the taking of depositions in this cause adjourned from the 21st of April, 1882, to April 22d, 1882, at nine o'clock a. m., at my office, in Battle Creek city, Michigan.

EUGENE M. CONVERSE,
Notary Public.

At the office of E. M. Converse, in the city of Battle Creek, Michigan, Saturday, April 22, 1882, at 9 o'clock a. m., the taking of the deposition of Edwin C. Nichols continued:

703 (Counsel for Nichols, Shepard & Co. offers in evidence a certified copy of reissued letters patent granted Nichols, Shepard & Co., assignees of Hoag, dated November 29th, 1881, No. 9951, and the same is marked by me "Hoag's Exhibit 'A'")

Direct Q. 11. Have you examined the device shown and described in reissued patent No. 9951, and do you understand the same?

A. Yes.

Direct Q. 12. Now, please state if the device therein shown, consisting of a stop with adjustable set-screws limiting the throw of the lever carrying the gear, is like the device you saw in October, 1880, as stated by you in previous answer.

(Counsel for Marsh objects to the question as leading and incompetent.)

(Counsel for Nichols, Shepard & Co. withdraws the question No. 12.)

Direct Q. 13. Is the device shown and described in said letters patent, consisting of the adjustable stops with set-screws limiting the throw of the arm carrying the gear, the same as you saw and which was described to you by Mr. Hoag, as stated in answer to question eight; and, if not, what difference is there between the two devices?

(Counsel for Marsh objects to the question as leading, incompetent, and indefinite.)

A. It is precisely the same. So far as I can see there is no difference whatever.

Direct Q. 14. You state in answer to question five that Mr. Marsh showed you a drawing of his invention for reversing gear. Please describe the device as near as you can.

(Counsel for Marsh objects — the question, unless the drawing is produced in evidence or its non-production accounted for.)

A. It consisted of two gear-wheels of equal diameter (I should judge they were of equal diameter), one upon the main shaft
704 and the other upon a short shaft in a frame. This frame pivoted or centered on the main shaft so as to move partially around the main shaft; the gear wheel on the shaft in the swinging arm provided with a wrist pin to which the valve rod is connected.

Direct Q. 15. Was there any device or not for moving this pivoted frame around the main shaft?

A. There was a handle projecting from the sleeve, by which it was to be moved around the main shaft.

Direct Q. 16. Was there or not any other device connected for any other purpose?

A. This handle was provided with a thumb latch and notches were shown in the quadrant or circle, around which it moved, into which the latch was to engage.

Direct Q. 17. Was the small model, which you say Mr. Marsh showed you afterwards, similar in all respects or not to the devices just described by you?

A. The small model was precisely the same as described by me in previous answers. It was exactly the same so far as the form of the gears and the handle and thumb latch and notches, but I think it was somewhat smaller in scale than was the drawing.

(Counsel for Marsh objects to the answer as indefinite and incompetent.)

(Counsel for Marsh objects to the witness leaving the witness stand during his examination or the time he is being examined.)

(Counsel for Nichols, Shepard & Co. states that the witness was standing up upon giving his answer while the notary was taking it down; that the witness turned and entered into conversation with Mr. E. A. Marsh, who was the only person he spoke to, and also that the witness did not leave the stand, as was attempted to be inferred by counsel for Marsh.)

(Counsel for Marsh declares that witness did leave the witness chair, and although disclaiming that it was meant to be conveyed that counsel for Nichols, Shepard and Co. had thereby sought
705 undue influence with the witness for any purpose, as counsel has unwarrantedly insinuated, he still insists upon the facts stated above as to the witness being away from the witness chair for a considerable time after the question was put and before and during the time the witness was answering the question, to the annoyance of the said attorney for Marsh, to which he enters his objection and protest.)

(Witness, E. C. Nichols, desires to state and make of record that at the time this particular question was asked he was standing within four feet of the counsel and attorney for Marsh and within that distance of the notary, but while the question was being framed he admits that he did walk the distance of three paces, by actual measurement, and did make a mere passing remark or two to Mr. Elon A. Marsh, one of parties to this suit; and witness desires to state that he had no thought or intention of any discourtesy toward counsel for Marsh and no idea that such a trivial incident could or would be thus construed or that it was in itself under all the circumstances an improper act to do. Witness will leave it to Mr. Marsh to say whether the conversation was in anywise prejudicial to his interests in this case; and witness further says that he has been present at the examination of all witnesses in this case, and that he thinks equal latitude in personal actions has been allowed other witnesses without protest, and he cannot but regard this action at this time by Mr. Metcalf, attorney for Marsh, as purely personal and intended as such, and he states that had counsel for Marsh seen fit to suggest to said witness that any such action was unpleasant or annoying to said counsel he, the said witness, would have cheerfully complied with his wishes in that regard.)

(Counsel for Marsh has but one word further to say and that is this: His nerves and brain are not in the keeping of Mr. Marsh or even under the entire control at all times of himself, and he feels very sorry that he has aggrieved Mr. E. C. Nichols so very much in this trivial matter, and also that the said Nichols could not
706 confine himself to the exact truth. Mr. Marsh, to whose seat Mr. Nichols acknowledges he went, is more than twice the distance he named from the witness chair, and he, the witness, moved around the room while answering the question as well as before it was put, as the witness states. Presuming that better order

and decorum will be preserved hereafter during the examination of witnesses, Mr. Metcalf will now close his say in this controversy by assuring Mr. Nichols that it was the farthest from his thought possible to give him an unnecessary or unwarrantable admonition.

Direct Q. 18. Was Mr. Marsh, when he came to you in reference to his valve gear, anxious or not to have you take hold of it for him?

A. He seemed to be. He so expressed himself very clearly and often.

Direct Q. 19. Did he at any of these interviews suggest or claim to have any other device to be used in connection with the device before described or suggest any modification of the same or not?

A. He did not.

Direct Q. 20. You state in your first answer that you are secretary and treasurer of Nichols, Shepard & Co. Have you any other position, and have you in the last four years been otherwise engaged?

(Counsel for Marsh objects to the question as immaterial.)

A. My chief interest and position at present is that of secretary and treasurer of Nichols, Shepard & Co. I am also one of the directors. I am engaged in various other enterprises outside of this.

By consent of parties the taking of depositions in this cause is adjourned to Monday, April 24th, 1882, at 9 o'clock a. m., at my office, in the city of Battle Creek, Michigan.

Saturday, April 22d, 1882, at 12 m.

EUGENE M. CONVERSE,
Notary Public.

707 At the office of E. M. Converse, in the city of Battle Creek, Michigan, Monday, April 24th, 1882, at 9 o'clock a. m., the taking of depositions in this cause resumed, pursuant to adjournment.

Deposition of EDWIN C. NICHOLS continued:

Present: Martin Metcalf, Esq., for Marsh, and Alex. Mahon, Esq., on behalf of Nichols, Shepard & Co., assignees, &c.

Direct Q. 21. How long have you been connected with Nichols, Shepard & Co.?

(Counsel for Marsh objects to the question as immaterial.)

A. Since 1869, when the corporation of Nichols, Shepard & Co. was formed. Previous to that date, from 1848 to 1869, the business was conducted as a firm or copartnership, under the name of Nichols & Shepard. I became a partner in the firm of Nichols & Shepard in 1857 and continued as such until 1869, when the firm business was merged into the corporation.

Direct Q. 22. State, if you can, what became of the engine upon which these first improvements made by Mr. Hoag were applied, and which has been stated as sent to St. Louis and other fairs.

A. That engine was sold and shipped away. I don't know where it is.

Cross-examination of EDWIN C. NICHOLS by MARTIN METCALF, Esq., attorney for Marsh:

Cross-question 1. Mr. Nichols, do you thoroughly understand the invention involved in this controversy and its principles of construction and mode of operation?

Answer. I think I do.

Cross-Q. 2. Do you positively swear that you never saw or had any knowledge of a stop or stops for the purpose of fixing
708 and regulating the movement of a reversing gear, or Marsh reversing gear, for steam-engines previous to the said month of September, 1880?

(Counsel for Nichols, Shepard & Co. objects to the question as misleading and not proper cross-examination.)

A. I never did, except so far as indicated by the thumb latch and notches in quadrant shown in the model exhibited me by Mr. Marsh, as before stated by me.

Cross-Q. 3. When was that small model, so called by you in your answer to question four (4), submitted to you by Mr. Marsh?

A. It was in the spring or early summer of 1880.

Cross-Q. 4. Please fix the month and day of the month.

A. I cannot fix it any more definitely.

Cross-Q. 5. Can't you fix it within a month or six weeks?

A. I have stated the time as nearly as I can fix it.

(Counsel for Marsh objects to the last answer as not answering the question. Witness does not answer the question.)

Notary, please repeat the question.

Cross-Q. 5. Question last above repeated.

A. No.

Cross-Q. 6. Before or after the time above referred to, and before the 7th day of September, 1880, did not Mr. Marsh show and explain to you drawings representing the said stops for the purposes you have stated?

(Counsel for Nichols, Shepard & Co. objects to the question as being misleading and not proper cross-examination.)

A. No.

Cross-Q. 7. Did you or not, on or about the tenth day of March, 1880, visit Mr. Marsh, in the rooms of the "Society for the Advancement of Machinists," in this city, and there carefully scrutinize and with your own hand operate the working model of a Marsh reverser applied to a steam-engine, the said reverser having movable and adjustable stops for the purposes you have stated?

(Counsel for Nichols, Shepard & Co. objects to the question
709 as not proper cross-examination, and if the counsel for Marsh insists upon this form of questions he must do so by making the witness his own.)

(Counsel for Marsh will endeavor to discharge his duty by trying to find out as to the knowledge or want of knowledge of the witness of the matters whereof he has heretofore testified in this case.)

Witness says: "Read the question again."

(The question re-read by the notary.)

A. No.

Cross-Q. 8. Do you or do you not know, in common with hundreds of living witnesses, that the said engine called the Moon engine, with a working model of Marsh reversing gear applied thereto, and having adjustable stops for the purposes you have stated, has been on exhibition or in practical public use in this city, and notoriously so, ever since the said month of March, 1880?

(Counsel for Nichols, Shepard & Co. objects to the question as being incompetent and not proper cross-examination, and merely an attempt on the part of counsel for Marsh to put on record, by his simple statement, facts or supposed facts not warranted by any of the testimony taken in this case.)

A. I do not know any such thing. I have heard considerable about the Moon engine while this testimony has been taken, but I know nothing personally, except as I have before stated.

Cross-Q. 9. Have you not had knowledge of the matters testified to, to which you last referred, and do you not now believe that the said engine has been at work with the said reverse gear applied, and having stops for the purposes you stated, long before the month of September, 1880?

(Counsel for Nichols, Shepard & Co. objects to the question as being incompetent and not proper cross-examination.)

A. No.

710 Cross-Q. 10. You have testified in reference to a talk or talks with Andrew J. Hoag in reference to the subject of his alleged invention. When did you have the first one? State the month and day of the month.

A. It was very soon after the application of the stop made by him to the first engine; it must have been in the early part of September, 1880.

Cross-Q. 11. Do you swear that you can't fix the exact day?

A. I cannot fix the exact day.

Cross-Q. 12. Let me see if I can't refresh your recollection. Was it before or after the engine left for the Western fairs?

A. I think it was before.

Cross-Q. 13. Don't you know whether it was or not?

A. I think it was before; my best recollection is that it was within two or three days of the time the said stop was applied by Hoag.

Cross-Q. 14. Let me try again. Was it before or after you left Battle Creek on your annual hunting expedition to the Au Sable river of Michigan that fall?

(Counsel for Nichols, Shepard & Co. objects to the question as incompetent.)

A. I think it was before.

Cross-Q. 15. Will you swear that you do not know whether it was before or after that time when you had your first talk with Mr. Hoag on the subject about which you have testified in your direct examination?

(Counsel for Nichols, Shepard & Co. objects to the question as misleading.)

A. I will repeat that I think it was before I went away on the hunt, and that it was within a very few days of the time when the stop was placed on the engine.

Cross-Q. 16. How long were you gone from Battle Creek on that occasion?

A. On what occasion?

(Counsel for Marsh asks that the last question and answer be read to witness, and same read by notary.)

711 A. If you mean the hunt, I think we were gone about three weeks.

Cross-Q. 17. When you returned to Battle Creek had this engine got back from the Western fairs?

A. I think it had.

Cross-Q. 18. Do you know whether it had or not?

A. I think the engine had been returned when I came back from the hunt.

Cross-Q. 19. Will you please answer my question 18? Let the question be repeated.

A. I have already answered. I think the engine was there when I came home.

Cross-Q. 20. Do I understand you as stating that you do not know, but only guess at it?

A. I don't know how you understand me. I state distinctly that to the best of my recollection the engine was here when I returned home.

Cross-Q. 21. Do you or not intend the examiner of interference to understand that you do not know whether the said engine had returned to Battle Creek at the time mentioned above?

A. I desire him to understand that it is my best recollection and belief that this engine had been returned to the factory at the time I returned from the annual hunt.

Cross-Q. 22. You have not yet answered my plain question. I repeat, Do you not know whether the said engine had returned at the time you have mentioned or not? Please answer yes or no.

(Counsel for Nichols, Shepard & Co. objects to this question, for the reason that the witness has already stated that to the best of his knowledge and belief that said engine was in this city upon his return from his annual trip, and this is all that is required of a witness.)

A. I do not absolutely know that that engine was absolutely in this city on the day I returned, but I have no doubt about it, and
712 state, as I have before stated, that to the best of my recollection and belief that the said engine was here when I returned.

Cross-Q. 23. Can you positively swear that you returned to Battle Creek before the first day of November of that year, from your annual hunting expedition, heretofore referred to?

A. I cannot.

Cross-Q. 24. Will you swear that you returned in time to cast your vote at the general election held in November of that year?

A. Yes, I think I was home in time to vote.

Cross-Q. 25. Is that the best of your recollection and belief?

A. Yes.

Cross-Q. 26. How many days, or about how many, intervened between the time of your said return and the day of election aforesaid? State as near as you can.

A. I think it was very near election day when we returned. It might have been three or four days before, possibly a week. I am not certain that it was not election day itself. I had no special reason for fixing or remembering that particular time of my return, and must answer from my best recollection.

Cross-Q. 27. To whom and to what place was that engine finally sent, if you know?

A. I do not know.

Cross-Q. 28. As superintendent of Nichols, Shepard & Co.'s shops and entire business, in the capacity of secretary and treasurer, etc., could you not find out in a very short time, if you wanted to do so?

(Counsel for Nichols, Shepard & Co. objects to the question as misstating facts.)

A. I don't know whether I could or not.

Cross-Q. 29. Your position as secretary and treasurer of that corporation makes you the executive head thereof or business manager, does it not?

A. No, sir; the president and vice-president both outrank the secretary and treasurer as the executive head, and you are
713 also mistaken in designating me as superintendent of the works.

Cross-Q. 30. I have simply asked you a question, and your answer is not, it seems to me, pertinent. I have not inquired about the rank of any officer of your house—simply asked you whether or not you are the acting business manager of that institution, and therefore have the supervision or act as the superintendent of that institution. That is what I mean.

A. I have, perhaps, as much, or more, to — with the actual management than any of its other officers, perhaps because they are a little lazy and shirk their duties and I am benevolent enough to let them do it, at no little personal inconvenience to myself.

By consent of parties, an adjournment taken to two o'clock p. m., this 24th day of April, 1882.

EUGENE M. CONVERSE,
Notary Public.

At the office of E. M. Converse, in the city of Battle Creek, Michigan, April 24th, 1882, at 2 o'clock p. m., taking of the testimony of Edwin C. Nichols resumed:

Cross-Q. 31. In your testimony hitherto given you have stated something about a talk or talks you had with Hoag about certain changes in the form of the stops or stop plates when the engine should have returned from the Western fairs; please state when the last talk was had in reference to this change, to which, you have stated, you assented—what was said and who was present.

A. The talk was had very soon after the trial of the engine, before referred to, on which Mr. Hoag had placed the stop. I think no one was present but Mr. Hoag and myself.

714 Cross-Q. 32. Was there an understanding then had or an agreement entered into between you and Mr. Hoag in reference to this invention now involved in this interference by which a patent was to be applied for or otherwise?

(Counsel for Nichols, Shepard & Co. objects to the question as incompetent and not proper cross-examination.)

A. I do not think anything was said at that particular time about getting any patent. The conversation was almost wholly, as I remember, descriptive of the change that he proposed to make in the form of the stop.

Cross-Q. 33. When was the idea of applying for a patent for the said alleged improvement first suggested to your mind?

A. Either a few days before or a few days after the application of the second stop Mr. Hoag asked me about his applying for a patent for his improvement or for the stop. We talked it over, and I told him that I would, if he wished, have the matter looked up by writing to Washington to our attorney there, giving him a description of the device, and have it looked up, and see if a patent could be obtained. He requested and urged me to do this, and I promised to do so.

Cross-Q. 34. What pecuniary consideration, if any, was talked of or agreed on to be paid him for his services for or on behalf of the said invention or application in case one should be made or a patent obtained?

(Counsel for Nichols, Shepard & Co. objects to the question as being incompetent, irrelevant, and not proper cross-examination.)

A. It was understood that Nichols, Shepard & Co. would pay the actual expenses and office fees incurred in the application or in the issuing the patent. No consideration was promised or spoken about as going to Hoag or to be paid to him.

Cross-Q. 35. What consideration, if any, has been offered by your-

self or on behalf of Nichols, Shepard & Co. to any other per-
715 son than Mr. Hoag in case he or they should apply for a patent on the said alleged invention involved in this controversy, so far as you do know?

(Counsel for Nichols, Shepard & Co. objects to the question for the same reason as last above.)

A. None whatever.

Cross-Q. 36. Do you swear that you have not suggested to any person or persons other than Mr. Andrew J. Hoag the application by such other person or persons for a patent on this same alleged invention?

(Counsel for Nichols, Shepard & Co. objects to the question as being incompetent, irrelevant, and not proper cross-examination.)

A. I do so swear.

Cross-Q. 37. You have already stated that you think you understand the principles of construction and mode of operation of the Marsh reverser for steam-engines, with the application of the stop or stops for fixing and regulating the movement of the reversing lever. I now ask you this question, to wit: Is it not an essential feature or element of the Marsh reversing gear (with the said improvement) that they are [on margin: the arc] in which the reversing wheel and lever moves when the engine is reversed shall be uniformly and exactly the same, and that the stops you have described are nothing more than an aid to this end?

(Counsel for Nichols, Shepard & Co. objects to the question as be[illegible]g irrelevant, incompetent, and not proper cross-examination.)

A. My experience in the use of the Marsh gear valve is that with[illegible] the application of the stops, substantially as shown in the Hoag [illegible]ent, it utterly fails when applied to traction engines. I don't [illegible]ow that I am competent at this time to say what is or is not an [illegible]ntial feature to the Marsh reversing gear.

Cross-Q. 38. You know enough about it, and have for some time [illegible], to desire to appropriate it to the use of Nichols, Shepard & [illegible] do you not?

(Counsel for Nichols, Shepard & Co. objects to the question as an attempt by counsel for Marsh to interject into the records of this case things not warranted by the facts or the [illegible]timony in this case, and that if, as counsel has implied, a proper [illegible]ourse is by a suit to prove these facts; and, further, that the Marsh reverser has no bearing whatever upon this case in controversy.)

A. I understand it is so alleged, but it remains to be proven.

Cross-Q. 39. If I understand, you have testified that you perfectly understand what the Hoag alleged improvement on the Marsh reverser is. Please examine the drawings and specification of the Hoag Exhibit "A" you now hold in your hand and state, if you will, what purpose the detent or latch of the lever "D" and notches in the quadrant plate, with which the said latch engages, therein shown, is intended to serve or does serve.

(Counsel for Nichols, Shepard & Co. objects to the question as misleading and having no bearing on the particular points in controversy in this case.)

A. Referring to figure one of Hoag's Exhibit "A," I fail to see that any detents or notches are shown.

Cross-Q. 40. You see the hand latch, don't you, at the upper end of the lever, with its downward-extending sliding detent? Now, don't you know that the lower end of that latch there represented engages in two notches—in one or the other of two notches—in the right and left hand sides of that quadrant plate, or is intended to? And don't you also know that Nichols, Shepard & Co. so make that lever with its said latch and detent attached to and made a part of every Marsh reverser applied to every traction engine with the said Hoag improvement, also represented in said exhibit, that the said firm of Nichols, Shepard & Co. make and send out?

(Counsel for Nichols, Shepard & Co. repeats the objection made to cross-question 38.)

A. Your question is a literary gem, very much involved. That drawing shows for itself. I do not see in it any such latch or
717 notches. Nichols, Shepard & Co. put a lever with a latch and a quadrant plate with a notch at each end on their traction engine.

Cross-Q. 41. That latch and notches on the quadrant plate, which you have just described, is what I call a detent for the lever. You can hunt up the literary part of it by consulting Webster, at your leisure; but for the present, if you will state what its purpose serves or is intended to serve, I will try to rest content.

(Counsel for Nichols, Shepard & Co. objects to the question for the reasons given in objection to question 38.)

A. I am not a mechanical expert. My impression is that it serves to assist in determining the throw of that particular lever to which the latch is attached as a matter of convenience for the operator.

Cross-Q. 42. Do you positively swear that you do not know precisely what purpose is served thereby and all that the said device is intended to serve?

(Counsel for Nichols, Shepard & Co. objects to the question as being irrelevant.)

A. I understand the lever with its latch is moved back and forth by the operator; that when he gets the lever to a point where the latch fits into the notch that he ceases to carry the lever beyond that point, the movement back and forth being made for the purpose of reversing the engine.

Cross-Q. 43. Would not the reverser shown in said letters patent, Exhibit "A," be much simplified and rendered more perfect, as well as serious objections removed, if it were possible to dispense with the said alleged Hoag invention I have shown?

(Counsel for Nichols, Shepard & Co. objects to the question as not

proper cross-examination, and that the witness is not produced as an expert; and if counsel for Marsh wishes to use the witness as an expert in this case he will be compelled to do so by making the witness his own.)

(Counsel for Marsh desires to state that the witness was used as an expert, at least to so great an extent as this, to wit: He did
718 testify that he understood or thought he understood the principles of construction and mode of operation of the said invention in controversy, as shown in said Exhibit "A," to which we call special attention at this time of the Hon. Commissioner of Patents; and, therefore, counsel for Marsh insists upon his undoubted right to find out, if he can, just what he knows and what he don't about the invention in controversy.)

(Counsel for Nichols, Shepard & Co. states that he has no objection to counsel for Marsh questioning the witness in relation to the invention in controversy, and has made no objection where the counsel has confined himself thereto.)

A. When parts are dispensed with, of course fewer parts remain, which would be more simple than if more parts were used. The only application that I have seen of the Marsh valve gear on a traction engine with the Hoag improvement left off or dispensed with was the instance or instances before referred to, in September, 1880, when Mr. Marsh applied his valve gear to the traction engine at the works of Nichols, Shepard & Co. He made two tests at that time, occupying a day and a half in said tests, without the Hoag improvement being applied. During that time I saw him make repeated attempts to make the engine work, and it utterly failed to work as a traction engine. Judging from that test or tests and remembering how entirely the thing failed, I should say it would not be an improvement to dispense with the Hoag invention or the Hoag improvement, but quite the contrary.

(Counsel for Marsh objects to the entire answer of the witness as a most palpable and glaring evasion of the question, and to which, as also to other and repeated questions evaded in like manner by this witness, he here again calls the attention of the Hon. Commissioner of Patents. The notary will please re-read the question No. 43. Question re-read by notary.)

(Counsel for Nichols, Shepard & Co. repeats the objection made.)

A. It would be more simple, I suppose, if any of the parts
719 were dispensed with and others not substituted. As for its being better, I should say from my experience with the engine as undertaken to be operated by Mr. Marsh without this improvement applied, as he did on the engine at the factory of Nichols, Shepard & Co., on a traction engine, I think the effect of the omission would be fatal to the proper working of the engine.

All after the first sentence in the last answer of witness is objected to for the same reasons given above, and the attention of the examiner in interferences and the Hon. Commissioner of Patents is again called thereto.

Cross-Q. 44. Have you or not read and do you not understand what the claims are involved in this controversy?

(Counsel for Nichols, Shepard & Co. objects to question, as the witness has not been put on the stand to testify as an expert or construe claims.)

A. I have read the Hoag patent, but do not know what claims are in the application of Mr. Marsh for a patent on this device. I understand he has made an application for a patent which brings him in interference with the Hoag patent; but I do not know the language of the claim or claims made by him in said application.

Cross-Q. 45. Would or would not, in your opinion, the substitution of the quadrant plate, with its movable and adjustable stops, as you saw it applied to the Marsh reverser at work on the Moon engine, so called, at the rooms of the "Society for the Advancement of Machinists," in this city, in the month of March, 1880, in lieu and place of the said stops shown in the Hoag patent you now hold in your hand, be such a change as would avoid the Hoag patent, a certified copy of which Nichols, Shepard & Co. have introduced here and marked Hoag's Exhibit "A"?

(Counsel for Nichols, Shepard & Co. objects to the question as stating facts not warranted by the testimony, and being misleading, incompetent, and not proper cross-examination.)

A. I never saw the Moon engine, so called, with movable
720 and adjustable stops, in the month of March, 1880, in the rooms of the Society for the Advancement of Machinists or at any other time or place. I cannot answer what would or would not avoid the Hoag patent.

Cross-Q. 46. Mr. Nichols, do you solemnly swear that you did not, in the month of March, 1880, visit the rooms of the Society for the Advancement of Machinists, in this city, and then and there see a working model of a Marsh reverser as it then existed, with the boiler steamed up and the engine at work? If you say you did, please describe what you did see and point out particularly, as you so well know how, the essential features of the invention as Mr. Marsh then and there illustrated it to you.

(Counsel for Nichols, Shepard & Co. objects to the question as making a statement not warranted by the testimony and not being proper cross-examination, and if counsel insists upon this style of question he must do so by making the witness his own.)

A. In the spring of 1880 I went to the Eldred block with Mr. Marsh to see one of his valve gears in operation. We went into a room in the upper part of the building in which was a small upright engine, on which was a Marsh valve gear. The boiler was steamed up and the engine set to running. Mr. Marsh then and there pointed out to me and described his valve gear, and showed me how it operated the engine. The essential features of the device, as he then described and illustrated it, consisted of two small gear-wheels of apparently equal diameter, one mounted on the main shaft and

the other in a sleeve or swinging frame, swinging around the main shaft as a center. The gear-wheel in the swinging frame had a wrist pin, to which the valve rod was connected and by means of which the valve was operated. A lever or handle projected from the sleeve, by means of which the swinging arm and constantly the gear carrying the wrist pin was moved in the arc of a circle partially around the gear-wheel attached to the main shaft. By moving this lever from one side to the other the position of the valve was shifted or changed, thereby causing the engine to reverse. The essential features of the invention as then and there described and illustrated were as I have stated.

721

Cross-Q. 47. You state that the lever swang partially around the main shaft. What prevented it from passing too far or beyond over the ends of the quadrant plate?

(Counsel for Nichols, Shepard & Co. objects to the question as not being proper cross-examination.)

A. I believe in my answer I did not state that the lever swung partially around the main shaft nor did I refer to a quadrant plate; but as there was a plate, which I think you now designate as the quadrant plate, I will now say that this lever was in close contact with a plate and moved or slid against it when the lever was moved from one side to the other. My recollection is that the lever kept its position by being in contact with this plate.

Cross-Q. 48. Against what did the swinging frame or lever rest at each extremity of the throw thereof in reversing the engine, if against anything—that is, what was there to determine the length of the throw or movement of the movable wheel and wrist pin?

(Counsel for Nichols, Shepard & Co. objects to the question as not being proper cross-examination and as having no bearing on the case in controversy.)

A. I do not remember that there was anything except the friction of the lever against the quadrant plate. The lever was perpendicular or nearly so when in the center, and was moved a short distance to either side from the perpendicular center in making the reverses and kept its position by being in contact with the said quadrant plate.

Cross-Q. 49. You have spoken of a change or alteration in the Hoag device after the return of the first experimental engine or reverser from the Western fairs. What change, if any, has been made since that time?

A. Do you mean since we put on the second stop on the engine that came back from the fair?

Cross-Q. 50. Yes; I mean just that.

722

A. We have lately found it convenient to cut a slot in the extreme outer end of the swinging arm, and the stop is now placed at that point.

Cross-Q. 51. When, for what purpose, and who made that change?

(Counsel for Nichols, Shepard & Co. objects to the question as being irrelevant and incompetent.)

A. I think it was made some time last fall, for the purpose, as I understand it, that it is a little more convenient and cheaper than our former arrangement. I do not know who ordered the change, but I presume it was Mr. Hoag.

(Paper offered by Martin Metcalf, Esq., counsel for Marsh, for identification, and same marked Marsh's Exhibit No. 1.)

(Counsel for Nichols, Shepard & Co. objects to the offering of the paper in evidence as being incompetent.)

Cross-Q. 52. I now call your attention to Marsh's Exhibit No. 1 and ask you if you recognize in the drawing a representation of the change or improvement you last described.

A. Figure N, shown in figure one and in figure three, are very similar to the stop casting now used by us.

Cross-Q. 53. I call your particular attention to the slot in the swinging frame marked "S" in figure two, and in connection therewith refer you to the casting N you mentioned and ask you if you therein recognize any of the features of the change or improvement made at the shops of Nichols, Shepard & Co. in reverser referred to in your answer 50.

(Counsel for Nichols, Shepard & Co. objects to the question as being improper, not having proven what the drawing is and as having no bearing on the question in controversy.)

A. The slot shown at S is similar to the one now made in the swinging arm of the valve gear, and the casting N is similar to the stop casting now used.

Cross-Q. 54. I call your attention to the set-screw "U,"
723 figure 2, and ask you if that device is used at the shops of Nichols, Shepard & Co. and recognized by you.

(Counsel for Nichols, Shepard & Co. objects to the question same as last above.)

A. I think not.

By consent of parties the taking of further depositions in this cause adjourned to Tuesday, April 25th, 1882, at 9 o'clock a. m., at my office, in the city of Battle Creek, Michigan.

EUGENE M. CONVERSE,
Notary Public.

At the office of E. M. Converse, in the city of Battle Creek, the taking of depositions in this cause resumed.

Present: Alex. Mahon, Esq., on behalf of Nichols, Shepard & Co., and Martin Metcalf, Esq., on behalf of Marsh.

Deposition of EDWIN C. NICHOLS continued:

Cross-Q. 55. Mr. Nichols, I wish to call your attention this morning to the story told by your witnesses or the witnesses for Hoag and Nichols, Shepard & Co., and ask you whether or not you will state, for the information of the examiner in interference cases, about how

many times this supremely silly story has been rehearsed or recited by or between the witnesses in that behalf.

(Counsel for Nichols, Shepard & Co. objects to this question and calls the attention of the Hon. Commissioner of Patents to this form of examination.)

A. There has been no recital or rehearsal among the witnesses for Hoag to my knowledge.

Cross-Q. 56. You have deemed it necessary to bring them here from said shops and have caused them to remain while the chief witness, Hoag, was being examined, and until their time came to testify, have you not?

724 (Counsel for Nichols, Shepard & Co. objects to this question, and states that during the examination of witnesses on behalf of Marsh or during the examination of the principal witness one or more of the witnesses for said Marsh were present: that as the works of Nichols, Shephard & Co. were some distance from the office, and as he desired to save as much time as possible, he had two of the witnesses here waiting to go on as soon as he should get through with the principal witness; that no objection was made to their presence by counsel for Marsh at that time, and therefore this style of question, attempting to throw slur upon the witness for Hoag by the simple statement of the attorney for Marsh, is entirely uncalled for and unprofessional, and he calls the attention of the Hon. Commissioner of Patents thereto.)

(Counsel for Marsh feels called upon to state the facts, a record of which he asks and is all he asks for, which facts are as follows, to wit: During the examination of Marsh Mr. Lafever was present at least a part of the time—as I now remember, during a part only—but I heard no objection on the part of the attorney for Nichols, Shepard & Co. and certainly have none to offer against the presence of witnesses on the other side; but the further fact is that the works of said Nichols, Shepard & Co. are distant from the notary's room about half a mile, more or less—I think considerably less—and that all or very nearly all of the said witnesses for Hoag have been almost constantly present up to the time of the administering the oath to this witness cannot be denied. If this circumstance, taken in connection with the testimony taken in the case, has any bearing in the issues involved, Mr. Marsh is entitled to its consideration, at least in the opinion of said counsel for Marsh. Counsel for Marsh takes this occasion to place on record what he has claimed heretofore as his right, viz., that a true record be made of the doings of this commission, omitting only evident trivialities that have no real bearing on this case, and when, as in this instance, out of which a war
725 of words has sprung, a matter deemed of importance and considered by said counsel for Marsh sufficiently so to call for record, he has the right to do so without subjecting himself to the charge of professional discourtesy which he hereby disowns and disclaims.)

A. I think one or two of the witnesses were here a part or most

of the time during the examination of Mr. Hoag. The only purpose that I know was simply to save time.

Cross-Q. 57. Do you now swear that up to the time of the taking the witness stand by yourself not more than two witnesses have been almost constantly present, not only during the examination of said witnesses, but during the reading over of their said testimony; and will you now swear that more than ten times the time saved or to be saved in the way you have stated was lost?

(Counsel for Nichols, Shepard & Co. objects to the question as being misleading and not proper cross-examination.)

A. No; I will not swear much about it. The question itself is very much involved, and it seems to me not susceptible of a direct answer. I will say, however, I do not know how many witnesses have been present nor how long they have remained while other testimony was being taken, nor do I know how much has been lost or saved in time.

(Counsel for Marsh calls attention to the last answer of witness, and desires especially to state that a correction of the last above question by inserting the word "not" after the words "swear that" and before the words "more than" was suggested in the witness' hearing, but inasmuch as it was done after the objection by the counsel for Nichols, Shepard & Co. had been raised and recorded, the correction was not urged or insisted on, the attorney for Marsh presuming that if witness so desired he could give true answer accordingly. Witness being a man of at least average intelligence and of such culture that he has seen fit heretofore to call for a disparaging comparison of the language used by counsel for
726 Marsh with that used by others or what it should be, the said counsel for Marsh hereby calls attention thereto, and, while the evident evasion of the question asked by (of) this witness is noted, suggests if the Hon. Commissioner of Patents will but place the "literary gem" this witness picked up from the lips of counsel for Marsh and with it place all the "jewels of consistency" found in the testimony of this witness and others sworn in his behalf or of Nichols, Shepard & Co. said counsel thinks he will need a microscope of infinitesimal power to discover said gem. [On the margin: Ans. 40, p. 49.] Counsel for Marsh now hopes witness will promptly answer the questions as his clear and brilliant intellect usually dictates and directs, promising on the part of counsel that if he will do so we will very soon have done with him.)

Cross-Q. 58. I now call your especial attention, in connection with the last question, to the last part of the answer of the nice young man, Nelson, to his answer to cross-question four, where he sought to inject into his answer a part of this same ridiculous story, a part he evidently thought he had omitted to recite in its regular stereotyped order, about a transaction he probably knew no more about than the man in the moon, as we will endeavor to show if but Nichols, Shepard & Co. will produce the engine he was testifying about or will tell Marsh where he can find it; said answer in nowise called

for by the question propounded, but that the said witness insisted on giving, as the record shows, with a zeal to serve his master like the model Methodist class-leader he is said to be. I now ask you this question: How do you account for this and other like circumstances recurring in the testimony of other witnesses for Nichols, Shepard & Co. as well as your own—that is, except as I have already indicated?

(Counsel for Nichols, Shepard & Co. objects to the question as being misleading and irrelevant, and calls the attention of the Commissioner of Patents, as he has before done, to this attempt of the attorney for Marsh to cast a slur upon the witnesses for Nichols, Shepard & Co. by his simple statements; and, while they are
727 of no consequence, he desires to call the attention of the Commissioner of Patents thereto, so that he may be able to judge of the style of the party, counsel for Marsh, who- he has had to contend with in the examination of the witnesses in this case.)

A. If it is as you state, I can't account for it.

Cross-Q. 59. In the same order of events, chronologically, that you had the talk or talks with Hoag above referred to by you in reference to the invention in controversy, did you invite Mr. Marsh up to your palatial residence on Maple street, in this city, and there entertain him for several hours?

(Counsel for Nichols, Shepard & Co. objects to the question as having no bearing on the case.)

A. I invited Mr. Marsh to call at my house one evening, and he did so.

Cross-Q. 60. State the time. Was the occasion you refer to after his return from the Western fair or not; and, if yea, how long after?

(Counsel for Nichols, Shepard & Co. objects to the question as being irrelevant and as not proper cross-examination.)

A. It was after his return from the Western fair, some time in the fall, probably November, or it may have been a month or two either side of that date. I don't pretend to remember the time exactly.

Cross-Q. 61. And did you or not, while thus entertaining Mr. Marsh and professing the warmest friendship toward him, as if in acknowledgement of sterling worth and manly services faithfully performed in the behalf of yourself and firm of Nichols, Shepard & Co., betray the honest confidence of this young laboring man and mechanic by conspiring with Mr. Hoag to despoil him of the just reward his due for study, labor, and skill in that behalf?

(Counsel for Nichols, Shepard & Co., while regretting the necessity of interposing an objection, desires again to call the attention of the Hon. Commissioner of Patents to this continued attempt of
728 counsel for Marsh to inject into the record facts not warranted by the record in the case or in any manner whatever, and he

also objects to the question as being irrelevant and not proper cross-examination.

A. No, sir; nothing of the kind was ever thought of by me nor done by me or any other person, to my knowledge. I disclaim and protest entirely and fully against any such imputation.

Cross-Q. 62. What means had Mr. Marsh at his disposal, if you know, other than to make some such arrangement with a manufacturer as both he and you have testified was made between yourself and him to bring to a practical test the best way to apply and ascertain the value of his new plan of reversing gear for traction engines and other engines involved in this interference?

(Counsel for Nichols, Shepard & Co. objects to the question as being misleading and not being proper cross-examination and being a misstatement of the facts.)

A. I don't know, or rather I didn't know much, if anything, about Mr. Marsh's financial condition at that time. I know he deemed it a very good opportunity to test his valve gear, and he urged and solicited me very strongly for the opportunity to do so. So far as his claims involved in this interference are concerned, no such claim or claims were made or suggested by Mr. Marsh to me at any time, either before or after the trial of the engine at the factory in September, 1880, as has been testified to.

Cross-Q. 63. Please examine the drawings of Marsh's Exhibit No. 1 introduced in this case, while I call your attention again to the slot "S" of the swinging frame carrying the reversing gear-wheel and wrist pin, in connection with the stop plate "N," with which the said slot engages, as you have heretofore stated or described, and ask you this question: Is this or not, if you know, the second attempt that has been made at the shops of Nichols, Shepard & Co. to despoil this young Mr. Marsh of the fruits of his toil and skill?

(Counsel for Nichols, Shepard & Co. objects to this ques-
729 tion for the reasons before given—that is, an attempt on the part of counsel for Marsh to inject into the record statements which are not true and not warranted by any of the testimony heretofore given; and he objects to the examination of witness on the drawings produced for the reason that it is not proper cross-examination and as incompetent.)

A. This is not the second attempt to despoil said Marsh, nor has there been a first or second attempt on the part of Nichols, Shepard & Co. or said Hoag or any one else, to my knowledge, to despoil said Marsh. The drawings, figure 2 and figure 3, have the appearance of being quite similar to the stop device used at this time on Nichols, Shepard & Co. traction engines, and would indicate that the party who made this drawing and made the application for a patent on this device was probably trying to steal it bodily or substantially from previous invention or device made by Mr. Hoag.

(Counsel for Marsh objects to the answers to both of the last above questions, and especially to the last part of the last answer, as not

responsive to the question, and to the statement therein contained hereby calls the particular attention of the Hon. Commissioner of Patents.)

Cross-Q. 64. If after further investigation you shall find that some one at or about the shops of Nichols, Shepard & Co. has been trying to steal bodily or substantially the invention you have referred to in the last part of your last answer from Mr. Marsh, instead of him from Mr. Hoag, do you or not now think it would be the last attempt at larceny in or about the shops of Nichols, Shepard & Co.?

(Counsel for Nichols, Shepard & Co. objects to the question as not being proper cross-examination for reasons before given in objection to question 58, as well as others of similar character.)

A. I can truly say I would not tolerate or profit by any larceny or other improper proceeding if I knew it, nor would I permit it to be done if I could prevent it.

730 By consent of parties the taking of further depositions in this cause adjourned to two and one-half o'clock p. m. instant.

Tuesday, April 25th, 1882.

EUGENE M. CONVERSE,
Notary Public.

At the office of E. M. Converse, in the city of Battle Creek, Michigan, at two and one-half o'clock p. m., April 25th, 1882—present, Alex. Mahon, Esq., on behalf of Nichols, Shepard & Co., and Martin Metcalf, Esq., on behalf of Marsh—proceedings in this case resumed in pursuance of adjournment, and neither party having any further interrogatories to propose to the witness, Edwin C. Nichols, he, after reading his testimony, signs the same.

EDWIN C. NICHOLS.

Closed, read, and subscribed before me this 25th day of April, A. D. 1882.

EUGENE M. CONVERSE,
[SEAL.] *Notary Public.*

731 *Andrew Thomson.*

ANDREW THOMSON, produced as a witness on the part Nichols, Shepard & Co., assignees, and being by me first duly sworn, does depose and say, in answer to interrogatories propounded to him by ALEX. MAHON, Esq., counsel for Nichols, Shepard & Co., assignees, as follows:

Direct Question 1. State your name, age, residence, and occupation.

Answer. My name is Andrew Thomson; age, thirty-five; residence, Battle Creek; occupation, a machinist.

Direct Q. 2. Are you acquainted with Andrew J. Hoag, one of the parties to this interference; and, if so, how long have you known him?

A. Yes; five years.

Direct Q. 3. Do you know anything of an invention made by Mr. Hoag; and, if yea, when did you first obtain a knowledge of it?

A. Yes; in November, 1880.

Direct Q. 4. How do you remember it was in November, 1880?

A. Because in that year, in October, I was put in foreman of the engine shops of Nichols, Shepard & Co.

Direct Q. 5. State the circumstances under which you obtained a knowledge of this invention.

A. After the [after the] engine came from the West, in changing from the original stop to the present [to the present] stop with two adjustable set-screws.

Direct Q. 6. Did you see this second stop applied with adjustable set-screws; and, if yea, by whom?

A. Yes; by A. J. Hoag and myself, Andrew Thomson.

Direct Q. 7. Were you assisting Mr. Hoag at this time?

A. Yes.

Direct Q. 8. Is the stop as now applied to the traction
732 engines of Nichols, Shepard & Co. the same as the first one you saw?

A. Yes.

Direct Q. 9. Has its location on the boiler been changed? And, if yea, state in what manner.

A. Yes; from a horizontal to a vertical position, but still having the same adjustable set screws.

Direct Q. 10. Please examine figures one (1) and two (2) of Hoag's Exhibit "A" and state if the stop with adjustable set-screws is similar or not to the one you saw Mr. Hoag apply to the engine in November, 1880.

A. They are.

ANDREW THOMSON.

Taken, subscribed, and sworn to before me this 25th day of April, A. D. 1882.

EUGENE M. CONVERSE,
[SEAL.] *Notary Public.*

733 *John A. Drew.*

JOHN A. DREW, produced as a witness on the part of Nichols, Shepard & Co., and being duly sworn by me, does depose and say, in answer to interrogatories proposed to him by ALEX. MAHON, Esq., counsel for Nichols, Shepard & Co., as follows:

Direct Question 1. State your name, age, residence, and occupation.

Answer. John A. Drew; age, twenty-four; occupation, machinist.

Direct Q. 2. Are you acquainted with Andrew J. Hoag, one of the parties to this interference; and, if yea, how long have you known him?

A. I am acquainted with Mr. Hoag, and I have been acquainted with him for about four years.

Direct Q. 3. What, if anything, do you know in relation to an

invention made by Mr. Hoag for improvement in reversing gear for steam-engines? And, if yea, state when you first obtained a knowledge of it.

A. Well, I know of the invention with a reversible stop with two set-screws. The first I ever saw was put on by Mr. Hoag. In regard to the date—I can't say as to the date.

Direct Q. 4. Can't you fix somewhere near the time when you first saw this device?

A. No, sir; I cannot; can't remember what time it was.

Direct Q. 5. Can't you fix within a month or six weeks of the time?

A. It was in the month of October or November.

Direct Q. 6. What year?

A. 1880,

Direct Q. 7. Now, please state the circumstances under which you first obtained a knowledge of this invention.

734 A. I was working on an engine one day, and Mr. Hoag fetched the pattern-maker in the room, and I heard him tell him just how he wanted the stop made. He spoke in particular about having the casting heavy and strong where the set-screws would be put in, or adjustable screws.

Direct Q. 8. Did you afterwards see a device of this kind applied to an engine? And, if yea, state the first time.

A. I did see a stop applied to an engine. I don't think I quite understand that question.

Direct Q. 9. When was the first time, as near as you can remember, you saw a stop like that described by Mr. Hoag to the pattern-maker applied to a traction engine?

A. I don't remember the day.

Direct Q. 10. Can you state somewhere near the date?

A. In October or November—some time—1880.

Direct Q. 11. Was the stop you saw applied in October or November, 1880, like the one now applied to the traction engines of Nichols, Shepard & Co.?

A. The stop was different in design, but the results were the same, having set-screws—adjustable set-screws.

Direct Q. 12. Please examine paper now handed you—figures one (1) and two (2), Hoag's Exhibit "A"—and state whether the stop therein shown is like the one you first saw applied to the traction engine in October or November, 1880.

A. As near as I can tell from the drafts, it is the same.

JOHN A. DREW.

Taken, subscribed, and sworn to before me this 25th day of April, A. D. 1882.

EUGENE M. CONVERSE,
Notary Public.

[SEAL.]

735 STATE OF MICHIGAN, } ss:
County of Calhoun, }

I, Eugene M. Converse, a notary public within and for the county

of Calhoun and State of Michigan, do hereby certify that the foregoing depositions of Andrew J. Hoag, Samuel Bradley, Charles King Nelson, Edwin C. Nichols, Andrew Thomson, and John A. Drew were taken on behalf of Nichols, Shipherd & Co., assignees of Andrew J. Hoag, in pursuance of the notice hereto annexed, before me, at my office, in the city of Battle Creek, in said county, on the 19th, 20th, 21st, 22d, 24th, and 25th days of April, A. D. 1882; that each of said witnesses was by me duly sworn before the commencement of his testimony; that the testimony of each of said witnesses was written out by myself; that the opposing party, Elon A. Marsh, by Martin Metcalf, Esq., of counsel and attorney for Marsh, was present, and Elon A. Marsh in person was present much of the time during the taking said testimony; that said testimony was taken at my office, in the city of Battle Creek, Michigan, and was commenced at three o'clock p. m. on the 19th of April, A. D. 1882, was continued, pursuant to adjournment, on the 20th, 21st, 22d, 24th, and was concluded on the 25th of said month of April, 1882; that I am not connected by blood or marriage with either of said parties, nor interested, directly or indirectly, in the matter in controversy.

In testimony whereof I have hereunto set my hand and affixed my seal of office, at the city of Battle Creek, in said county, this twenty-seventh day of April, A. D. 1882.

EUGENE M. CONVERSE,

[SEAL.] *Notary Public within and for Calhoun Co., Michigan.*

736 Mr. Metcalf, of counsel and attorney for Marsh, hereby gives notice that while rendering aid in reading and correcting proof for the printer of the testimony-in-chief of Marsh, which he did do by carefully comparing the official record with his own record as taken down by himself (to the truthfulness of which he holds himself ready to render ample vouchers), — discovered certain errors in the official record, both of omission and commission, to which errors he immediately called the attention of the notary, Eugene M. Converse, Esq., before whom the said testimony was taken, saying to the latter substantially as follows, to wit: That while in his, Metcalf's, opinion he, the said notary, was not authorized to make any alteration or change in the original as taken down by him, changing the true intent and meaning thereof, yet that whenever he felt convinced that errors of punctuation, or even of words, to be added or expunged—commonly called clerical errors—had crept into the record through inadvertence, accident, or mistake on his part, or that such additional words or elimination of said errors from the record was necessary in order to convey what he, the said notary, knew to be the true intent and meaning of the language employed in his hearing, common courtesy and fairness to Mr. Metcalf, his client, and the witnesses, as well as the mandates of the statutes of the United States requiring him to render a true and impartial record of the testimony taken before him for the use at the hearing before the Hon. Commissioner of Patents, would seem to him, the said Metcalf, to call for such corrections; that if the officer had the least doubt of his duty in the premises said Metcalf would

respectfully ask and suggest *that* the corrections desired (here identified by the annexed copy of said printed testimony, with pencil marginal notes indicating the corrections asked for) in one of the ways following, to wit: First, by marginal notes stating the request of the attorney or the witness, as the case might be, the said
737 notary appending his own comments thereon, stating briefly his own best knowledge and recollection; or, second, by adding to his final report and certificate the substance of the corrections asked for, adding his own comments as before, the entire of which errors it is believed will be readily detected and corrected in this case by the intelligent and careful searcher after the naked truth when attention is once directed to such errors in order to reach the obvious meaning of the testimony. Mr. Metcalf, attorney for Marsh, further avers that the officer, Mr. E. M. Converse, Esq., seemingly acquiesced in the aforesaid views of Mr. Metcalf as to what he might and should do in the premises, and, as a matter of fact, did render the most of the corrections asked for, if not all, which said corrections were delivered over into the hands of the printer and was by him being put in type, and it was not until after Mr. Metcalf supposed the testimony had all been printed and corrected that Mr. Martin E. Browne, Esq., proprietor of the press where the printing was being done, called the attention of the attorney for Marsh to the fact that the said corrections, with the appended certifications of the officer thereto stating when and for what reasons the said corrections were made, had been withdrawn without the knowledge of the said attorney for Marsh by the said notary, Eugene M. Converse, Esq., before whom the said testimony was taken.

Mr. Metcalf, of counsel and attorney for Marsh, hereby gives notice both to the opposing parties in this writ and to the said officer, Eugene M. Converse, Esq., that if the aforesaid corrections are not duly made or conceded it will remain for Mr. Marsh to file his proofs of the allegations hereinbefore recited, and that he will urge the consideration of all the attendant facts and circumstances at the hearing of this cause before the Hon. Commissioner of Patents.

Mr. Metcalf, of counsel and attorney for Marsh, further complains of the certificate of return of the said Eugene M. Converse, Esq., in that he has failed to comply with the requirements of clauses
738 four and five of rule 150 of the rules of practice in the United States Patent Office, especially considering that the said attorney for Marsh had laid on the desk of the said attorney, for his guidance, a copy of said rule, bearing date 1880, and personally and particularly calling the attention of said officer to the specified clauses of the said rule for the government of officers taking and transmitting testimony. Counsel for Marsh further gives notice that Marsh will introduce at the hearing certain official records of the United States Patent Office, which records will include all models, drawings, and matters connected with or in anywise appertaining to the patent granted Elon A. Marsh, dated December 28th, 1880, No. 236,052, together with the models, drawings, papers, and matters appertaining to the application of Elon A. Marsh for a patent for reversing gears for steam-engines, filed September 28th,

1881, and involved in this interference, together with the preliminary statements of the said parties, Elon A. Marsh and Andrew J. Hoag, and urge, then and there, the consideration thereof; and, further, that the said Marsh will urge the objections by said counsel for Marsh and noted of record.

By consent of parties, an adjournment taken to Wednesday, April 26th, 1882, at 9 o'clock a. m., at the office of Eugene M. Converse, in the city of Battle Creek, Michigan, from this date, April 25th, 1882, at 6 o'clock p. m.

EUGENE M. CONVERSE,
[SEAL.] *Notary Public.*

At the office of E. M. Converse, in the city of Battle Creek, Michigan, Wednesday, April 26th, 1882, at 9 o'clock a. m., the proceedings in this case resumed, in pursuance of adjournment had April 25th, at 6 o'clock p. m.

Present: Alex. Mahon, Esq., on behalf of Nichols, Shepard & Co., and Martin Metcalf, Esq., on behalf of Marsh.

(Counsel for Nichols, Shepard & Co. objects to the state-
739 ments of said Martin Metcalf, attorney for Marsh, being made of record, and further objects to the offering of the printed pamphlet, alleged to be a copy of Marsh's testimony, containing proposed changes in the sworn testimony of the witnesses for Marsh, made by Martin Metcalf, attorney for Marsh. Counsel for Nichols, Shepard & Co. further objects to the notice offering in evidence *of* the alleged patent of Marsh in behalf of Marsh at this time as not being in compliance with the office rule 150. Counsel for Nichols, Shepard & Co. desires also to call the attention of the Hon. Commissioner of Patents to the ridiculous notice of counsel for Marsh to offer in evidence the drawings and papers of the application of Marsh, now in this interference, and also the preliminary of statements of Marsh and Hoag, and his notice to urge the consideration of the same at the hearing. Counsel for Nichols, Shepard & Co. further objects to the reception of the testimony on behalf of Marsh, for the reason that it was not taken, forwarded, and printed in compliance with office rule 150, and also calls the attention of the Hon. Commissioner to the fact that said testimony was printed by Martin E. Brown, one of the witnesses for Marsh. Counsel for Nichols, Shepard & Co. desires to state, and requests the notary who took the testimony on behalf of Hoag, assignor, to sustain him in that statement, that said notary, Mr. Eugene M. Converse, took all of the testimony on behalf of Marsh, as will appear from the records, and that he read the same very carefully to each witness and to Martin Metcalf, Esq., who was present, and that the witnesses subscribed and swore to the same; and he further desires the notary, E. M. Converse, to state that, while he, said notary, has no interest in the case for either party, he has been and is still particularly friendly with said E. A. Marsh. Counsel for Nichols, Shepard & Co. also states that, knowing that said notary was particularly friendly to said Marsh, he gave notice of the taking of testimony in behalf of Hoag, assignor, &c., before the same notary, knowing and believing that said notary

would do his duty in the case; that upon starting the testi-
740 mony the said counsel for Nichols, Shepard & Co. handed said notary a copy of the rules of practice of the United States Patent Office for his guidance in the matter.

Counsel for Nichols, Shepard & Co. here desires further to state that the said notary, Eugene M. Converse, has taken all this testimony with remarkable care and fidelity, and has been particularly careful in taking the testimony to get the exact language of every question and the exact words of every witness in answer thereto, as will appear from the records, and especially so in view of the slurs, insinuations, and abuse heaped upon him by Martin Metcalf, Esq., attorney for Marsh, to all of which Alexander Mahon, counsel for Nichols, Shepard & Co., here certifies. Counsel for Nichols, Shepard & Co. further states that the said Martin Metcalf, attorney for Marsh, has stated on several occasions that he was perfectly familiar with the rules of practice in the United States Patent Office and with the rules of evidence; and he also desires to state that on one or more occasions when counsel for Nichols, Shepard & Co. suggested a point where he believed said Metcalf was not strictly complying with the said rules of practice (this being done by counsel for Nichols, Shepard & Co. to assist in getting the testimony on behalf of Marsh in such shape as not to take any advantage of any technicalities) that he has met with the rejoinder, "Who is running this case?" and words of like import. Counsel for Nichols, Shepard & Co. here desires to state that with all the boasts made by counsel for Marsh as to his familiarity with the office rules and practice he did not instruct the notary so that he should be able to transmit the testimony on behalf of Marsh in compliance with the office rules, but that instead of trying to assist the notary in taking and forwarding the testimony on behalf of Marsh in a proper manner he, said counsel for Marsh, has attempted, after the closing of the testimony and some days after the counsel for Nichols, Shepard & Co. had left for Washington, to have a sworn officer tamper with
741 and change testimony after the same had been taken, sworn to, and subscribed by the witnesses. Counsel for Nichols, Shepard & Co. now state that if Martin Metcalf, Esq., attorney for Marsh, and Elon A. Marsh, who has been present and advised during the examination of all the witnesses in this case, is willing, as he, Martin Metcalf, shows by his statement he had done, to attempt to have a sworn officer change testimony after the same has been made of record, he, said counsel for Nichols, Shepard & Co., forbears to make further comment thereon, and leaves the matter for the consideration of the honorable tribunal before whom the case shall be heard.

By consent of parties, an adjournment taken from this hour, 10.45 a. m., to 2 o'clock p. m., of this 26th day of April, 1882, at my office, in the city of Battle Creek, Michigan.

EUGENE M. CONVERSE,
[SEAL.] *Notary Public.*

At the office of E. M. Converse, in the city of Battle Creek, Michigan,

April 26th, 1882, at two o'clock p. m., pursuant to an adjournment, appeared the parties in this cause, by their respective counsel, as heretofore, and the proceedings in this matter resumed.

Counsel for Marsh desires to state that he has barely had time during the noon hour to look over a very indistinct press copy of Mr. Mahon's very breezy and gauzy production, and as the time of Nichols, Shepard & Co. is now rapidly drawing to a close, and all concerned are doubtless anxious to find respite from a long and tedious confinement, will now ask for a record of the following, to wit:

Counsel for Marsh objects to the introduction of the extraordinary and unwarranted statements of counsel for Nichols, Shepard
742 & Co., assignees, etc., resting, as it does, upon the simple statement of the said counsel for Nichols, Shepard & Co. and the said notary, Eugene M. Converse, Esq., and calls the attention of the Hon. Commissioner of Patents to the following facts: That the objections raised by the said Metcalf to the certificate of return by the said notary, Eugene M. Converse, Esq., as not in compliance with rule 150 for taking and transmitting testimony, was for the sole and only purpose of calling attention thereto by due notice thereof in order that a proper return shall now be made by the same officer, Eugene M. Converse, Esq., in order that the omissions referred to shall be thus amended and remedied, to the end that the interests of Mr. Marsh shall not suffer thereby or by reason of said errors. Mr. Metcalf, attorney for Marsh, hereby calls the particular attention of the Hon. Commissioner of Patents to the following fact, to wit: That the said attorney for Nichols, Shepard & Co. now seeks to take advantage of an act of the said notary or omission which he, the said attorney for Nichols, Shepard & Co., thus indirectly presumes to be fatal to the interests of Mr. Marsh by raising objections to the consideration of the testimony of Marsh at the hearing, if Mr. Metcalf understands it, thereby seeking advantage out of an illegal or wrongful act of the said Eugene M. Converse, Esq., against the interests of Mr. Marsh, contrary to well-established principles of right, based on the self-evident proposition that no person may take advantage of his own wrongful act, which act in this last-cited instance consists in raising objection to the correction of an oversight or error on the part of said notary, thus adopting and becoming stepfather to the illegitimate offspring of the said Eugene M. Converse, Esq.

Counsel for Marsh asks the notary to make a record of words which fell from his own lips immediately after or following after the name "Eugene M. Converse, Esq.," as appearing of record above. The said Eugene M. Converse said he would if counsel would repeat the words, implying that he would not otherwise. Counsel for
743 Marsh will now repeat from memory the words or the substance of the words made use of, to wit: "We will now have something legitimate." "He who laughs last laughs best." Now, after this flagrant professional discourtesy and new exhibition of ill-will toward Marsh and his counsel, I will proceed to make or ask to have made the record I was trying to have made when I was inter-

rupted. Counsel for Marsh desires to state that in so far as the printing of the testimony by Martin E. Brown, one of the witnesses in behalf of Marsh, is concerned the said Metcalf had nothing whatever to do with it further than he has already heretofore stated and indicated, and that he, the said attorney for Marsh, does not know and does not believe that there is any office rule nor any law forbidding the same, and for the further reason that the original sworn record is supposed to be the sole and only evidence in the case, the printed copies being for convenience, save only where it shall be made to appear that serious errors have in some way crept into the original record. Counsel for Marsh further states that he acknowledges voluntary consent to the taking of the testimony of Hoag or of Nichols, Shepard & Co. in this cause before the said notary, Eugene M. Converse, Esq., and he did so for the following and other reasons: That after talking with the said notary and being assured by him that he would try and carefully take down the exact words of witnesses, a thing he had been accused of seeming heedlessness about by the said attorney for Marsh, arising, as was explained, from a common habit of persons more accustomed to draw affidavits, proper, where the ideas of the affiant are usually and more often framed in the words of the notary, than in taking testimony under the requirements of the Patent Office to be used therein; and, further, because he desired to save time and expense both to the counsel for Nichols, Shepard & Co., himself, and all the parties to this writ, but more especially in order not unnecessarily to incommode Nichols,
Shepard & Co. or their attorney by asking for a postpone-
744 ment, the time being short, and he, the said attorney for Marsh, not desiring to subject himself a second time to the implication or charge of professional discourtesy in not affording every possible favor in his power to grant to said attorney and Nichols, Shepard & Co.

Counsel for Marsh hereby declares that he has not on several occasions nor on any occasion whatever stated that he was perfectly familiar with the rules of evidence, or even the rules of the United States Patent Office, and that the well-known fact is exactly contrary to the sweeping and baseless statement of the said attorney for Nichols, Shepard & Co. in this regard, it being a fact well known by the said notary, Eugene M. Converse, Esq.; Mr. Edwin C. Nichols, and every other person acquainted about Battle Creek and her citizens, as well as every witness in this case that knows anything about Mr. Metcalf, that the said attorney for Marsh, although having had more or less practice in soliciting and obtaining patents, that he never read or practiced law a day in his life, and he, the said Metcalf, hereby declares that he who knowingly publishes the false statement above noted and hereby denied will be held to a strict account therefor.

Counsel for Marsh further states that his limited experience in soliciting patents has mainly been in association with the late well-known Washington house of Alexander & Mason, whose business is succeeded to by Col. Chas. M. Alexander; and, further, that never in his, said Metcalf's, lifetime thus far has he advertised himself as

a lawyer, or even a patent attorney, and that his said business of soliciting patents and engagement in the present case, as in the past, has been thrust upon him by the parties for whom he has endeavored faithfully to perform the trust confided to him, and he, the said Metcalf, for himself, hereby distinctly declares to all concerned that his conscience is his own and in the keeping of no man on earth, and when he undertakes to do a specified piece of work, be it but a holiday pastime or an unpleasant duty, such as the attorney for Nichols, Shepard & Co. and the said Eugene M. Converse,
745 Esq., have seen fit to new force upon him, they will find that Martin Metcalf is not made of dough or putty, to be kneaded into bread and butter for Nichols, Shepard & Co. or anybody else, nor will he allow any act or thing done whereby injustice shall or may reach anybody he is in duty bound to serve, if he have power to save. Counsel for Marsh further declares that, although ever disclaiming superior knowledge for himself, he has repeatedly called the attention of the said notary, Eugene M. Converse, Esq., to errors, both of omission and commission, some of which errors have been acknowledged to have been committed by said notary and been duly corrected; that some errors, as Metcalf believes, yet remain, at least in the former record and presumably in the present one, doubtless, some of which will be found on examination to have been made by counsel for Marsh, attributable to his not immaculate and infallible pen. Attorney for Marsh freely declares that he well knows of his imperfections and feels thankful always to have them pointed out in a friendly way as opportunity occurs, that he may correct them if possible; but he protests against this bombastic parade of superior wisdom on the part of the attorney for Nichols, Shepard & Co., unless it be understood as for the purpose of diverting attention from the real issue involved in this case, inasmuch as the dodge of "stop thief" is old and not now patentable.

Counsel for Marsh denies that he ever used the words "Who is running this case?" in the sense implied by counsel for Nichols, Shepard & Co., and that if used at all by Metcalf the familiar phrase was uttered in a friendly manner and by way of a joke during one of the intervals of rest of a few moments while the testimony was being taken, persons having office business with Mr. Converse, sometimes calling, giving occasion therefor, and such sometimes needed relief from the tedium of taking testimony. Counsel for Marsh forbears further comment on the remarkable *ex parte* statements of attorney for Nichols, Shepard & Co., referred to in
746 reference to the said proposed changes or alterations or whatever characterization they may bear, and desires to now state that for the purpose of obtaining a ruling on what is and what is not the duty of a notary taking and transmitting testimony to be heard in interference cases the question raised is respectfully submitted. Counsel for Marsh gives further notice that he hereby reserves his rights at the proper time to file his proofs of the allegations heretofore made and introduced, should he elect so to do, for consideration at the hearing before the Hon. Commissioner of Patents.

I, Eugene M. Converse, the notary public before whom the testimony-in-chief of Elon A. Marsh and the testimony of Nichols, Shepard & Co. has been taken in this matter of interference, desire to state, in answer to matters made of record by Martin Metcalf Esq.'s request (he being of counsel and attorney for Marsh), as follows:

That I do not know that I am anything but friendly with all of the parties to this interference, and am certain that I am on friendly terms with Mr. E. A. Marsh; that at the taking of the testimony-in-chief of Elon A. Marsh I was careful to take the questions and answers as given in every instance, and that at the close of every witness' testimony I read the same over to him to avoid any errors, and that after so reading their testimony to them with care each witness subscribed to his respective deposition; that at the close of the testimony-in-chief of said Marsh I was informed by Martin Metcalf, Esq., that it was the desire of Marsh to have such testimony printed in the city of Battle Creek, Mich., and I was requested to delay my return for a few days (which I did, supposing that the said Martin Metcalf, counsel for Marsh, would not ask me anything which he had not a right to do, I not being familiar with the rules of practice in the Patent Office), and some days after the taking of the testimony-in-chief of said Marsh was closed I was informed that the printer was in waiting for the testimony, that he might print the same in the meantime. I had requested Mr. Metcalf, counsel
747 for Marsh, to provide me with a copy of the Patent Office Rules (which I knew he had while taking the testimony-in-chief of Marsh), that I might prepare my certificate in conformity with the rules. Mr. Metcalf promised me, from time to time, to furnish me with a copy of the rules for my use in making my returns, and as often failed to do so. When preparing the testimony for the printer, Mr. Martin E. Brown, I informed Mr. Metcalf that I had not yet made my certificate of returns, and that I had nothing from which to make the same, save a copy of U. S. Patent Office Rules, dated 1878. Mr. Metcalf then stated to me that he didn't know where his copy of the Patent Office Rules was, but that he thought Mr. Marsh had taken it. Mr. Metcalf then looked over the copy of 1878 rules, which I had, and said to me that there was no substantial change in the present rules, as to officer's certificate of returns, from the rules of 1878, and said Martin Metcalf, counsel and attorney for Marsh, instructed me to make my certificate of return in accordance with said Patent Office Rules of date 1878, which I did to the best of my understanding, and Mr. Metcalf saw my said certificate of return and found no objection whatever thereto.

And I, the said notary public, wish to make the further statement, to wit, that Mr. Martin Metcalf, of counsel and attorney for Marsh, while the said testimony-in-chief of Marsh was being printed or set up for printing, came to me at my office and said there were some errors in the testimony, and that he wish- I would note such errors on the record before the printing thereof. I informed Mr. Metcalf that I did not think I had any right to tamper with or change the record as he requested me to do. Mr. Metcalf then asked me to make marginal notes of the changes which he desired, which I also

refused to do, as I was not convinced of my right so to do. Mr. Metcalf then insisted upon my making an addenda, setting forth the changes he desired to have made, and at my suggestion Mr. Metcalf prepared an outline of what he wanted me to attach to the
748 record. I question my right to attach anything to the record, excepting my certificate of the doings before me, and although I prepared a paper, as outlined by Mr. Metcalf, I never attached it to the record, and after consideration informed Mr. Metcalf that I did not think I had any right to append to the record any such paper, or any other matters not belonging to the record, simply on the suggestion of the counsel for one of the parties in interest, in the absence of the opposing party and his counsel, and for the reason that I did not consider that I was the person to interpret the record, but that rather my duties were clerical (to take and transmit the testimony), and I wish to state further that the changes in the record asked by Mr. Metcalf were not errors, within my remembrance and knowledge; and, further, that some of the changes asked by Mr. Metcalf, I am very positive, were not errors in the record, only so far, if at all, as committed by the witness or the questioner; and, further, that some of the changes asked by Mr. Metcalf, in the answers made by Martin E. Brown in his testimony, Mr. Brown said, when asked by me in Mr. Metcalf's presence about them, that he didn't know as he said as Mr. Metcalf insisted he did; and Mr. Brown further said that he was satisfied with his testimony as it was. As to the statement made by Mr. Metcalf that before he knew that I had not attached the paper, which he desired me to attach to vary the record, he supposed that all of the testimony had been printed and corrected, I will say that Mr. Metcalf knew that the testimony was not printed and corrected when he learned that I would not attach the paper or addenda which he asked, and I am ready to verify to that fact under my oath.

As to the illegality of the certificate of return made by me of the testimony of E. A. Marsh in chief, I wish to further state that such certificate of return was made in the best of faith and to the best of my knowledge, not having any assistance in that regard except as I have before stated. As to the statements made by Mr. Metcalf of the utterances made by me while he was making his state-
749 ment last preceding this, I wish to state that I did make some such remarks in response to intimations made by parties in the room and Mr. Metcalf himself in relation to my immediate prospects of matrimony. The remark was entirely foreign to this case, and only suggested by the remark made by Mr. Metcalf.

I wish to further state that I have endeavored at all times in the taking of the testimony-in-chief of Marsh and of the testimony of Nichols, Shepard & Co. to treat the counsel in the case and the parties with every courtesy and with fairness; and, further, that I have, during the entire time of taking the testimony of Nichols, Shepard & Co., been treated by Mr. Metcalf with continual discourtesy, and at times I have thought and felt that he manifested his ungentle manners toward me for the purpose of causing me to commit errors on the record. However, I have done all in my power to secure a true record, and believe that I have succeeded in a remark-

able degree, if not entirely. I disclaim infallibility, nor do I attribute like qualities to others.

I will further state, in answer to request made by Alex. Mahon, Esq., counsel for Nichols, Shepard & Co., of record, that I have no interest whatever in this matter of interference or as to the results of the same or for either party thereto; and, further, that I am and have been on friendly terms with Mr. Elon A. Marsh for some two years past, or thereabouts, and that Mr. Marsh and I are still friendly, beyond a doubt, in my mind; and I will further state, in answer to request made by Mr. Mahon, counsel for Nichols, Shepard & Co., that I took with my own hand all of the testimony on behalf of Marsh, as appears of the record, and that I read the same over very carefully to each witness (to each his own), and that the witnesses subscribed the same before me, and that each witness was sworn by me before the taking of his testimony, and that Martin Metcalf, Esq., was present at the time of reading such testimony nearly, if not all of the time.

Mr. Metcalf, of counsel and attorney for Marsh, has heard
750 read over by Mr. Eugene Converse, Esq., a statement by the said officer in relation to certain matters of record in the interference case of Marsh against Hoag, now pending in the Patent Office, from his official record thereof, from which the said Metcalf dissents in many important particulars, and hereby gives notice that, as far as the said statement of Mr. Converse conflicts with his understanding thereof, said Metcalf will at the proper time file such counter-statements as the circumstances seem to require, supported by such corroborative proofs as the said Metcalf shall claim it fit and proper to make.

Proceedings in this matter closed this 26th day of April, A. D. 1882.

EUGENE M. CONVERSE,
[SEAL.] *Notary Public.*

STATE OF MICHIGAN, } ss:
County of Calhoun, }

I, Eugene M. Converse, a notary public within and for the county of Calhoun and State of Michigan, do hereby certify that after finishing the testimony of the witnesses, as shown by a previous certificate attached at the close of the testimony by me taken, the attorneys in the case, Alex. Mahon, Esq., and Martin Metcalf, Esq., and I, the notary, Eugene M. Converse, made certain statements of record, as will appear by reference thereto, all of which were made of record by me at the instance and request of the party desiring the same; to all of which statements made of record as by me stated I make this further certification: That the said statements were commenced on Tuesday, April 25th, 1882, and were continued pursuant to adjournment and closed on the 26th day of April, 1882.
751 In testimony whereof I have hereunto set my hand and

affixed my official seal, at the city of Battle Creek, in said county of Calhoun, Michigan, this 27th day of April, A. D. 1882.

EUGENE M. CONVERSE,
[SEAL.] *Notary Public within and for Calhoun County, Michigan.*

752 It is hereby stipulated and agreed by and between the counsel for the respective parties to the interference—

1st. The said counsel for Marsh agrees that the direct testimony of said Marsh shall now be closed, and that no further direct testimony shall be offered on behalf of said Marsh, and that the said Hoag, assignee, etc., may now proceed to take his testimony during the time allowed to said Marsh.

2d. The counsel for Nichols, Shepard & Co., assignees, etc., hereby agree to serve formal notices immediately, giving the names of the witnesses he proposes to examine, and said examination to commence on Monday, the 27th of March, 1882, before Eugene M. Converse, at his office, in the city of Battle Creek, Michigan, at two (2) o'clock p. m. of that day.

Dated March 25, 1882.

EUGENE M. CONVERSE,
Notary Public.

Before the Hon. Commissioner of Patents.

In the matter of the interference between the application of E. A. Marsh, filed September 28, 1881, and the reissued letters patent granted to Nichols, Shepard & Co., assignee of A. J. Hoag, No. 9951, November 29, 1881, for improvements in reversing gears for steam-engines.

SIR: You are hereby notified that on Monday, March 27th, at 2 o'clock p. m., at the office of E. M. Converse, No. 19 East Main street, Battle Creek, Mich., I shall proceed to take the testimony of A. J. Hoag, Samuel J. Bradley, A. A. Ellsworth, E. C. Nichols, David Shepard, and F. G. Shepard, all of Battle Creek, Mich., as wit-
753 nesses in behalf of said A. J. Hoag, the examination to continue from day to day until completed. You are invited to attend and cross-examine.

Respectfully, ALEX. MAHON,
Of Counsel for Nichols, Shepard & Co., Assignees of A. J. Hoag.

Battle Creek, Mich, March 25, 1882.
To E. A. Marsh.

Service acknowledged this 25th day of March, A. D. 1882.
MARTIN METCALF,
Of Counsel and Att'y for Marsh.

Before the Commissioner of Patents.

In the matter of the interference between the application of E. A. Marsh, filed September 28th, 1881, and the reissue patent granted Nichols, Shepard & Co., assignee of A. J. Hoag, November 29th, 1881.

Depositions of witnesses examined on behalf of Nichols, Shepard & Co., assignee of A. J. Hoag, pursuant to a stipulation by the counsel for the respective parties, endorsed on the record at the close of the testimony offered on behalf of E. A. Marsh, dated March 25th, 1882, and of the notice hereto attached, at the office of Eugene M. Converse, in the city of Battle Creek, Calhoun county, Michigan, on Monday, the 27th day of March, 1882, at two o'clock p. m.

Present: Martin Metcalf, Esq., on behalf of E. A. Marsh, and Alexander Mahon, Esq., on behalf of Nichols, Shepard & Co., assignee of A. J. Hoag.

Martin Metcalf, Esq., counsel and attorney for E. A. Marsh, requests a record of the following notice: That his understanding
754 of the above stipulation is simply this, to wit: That Marsh agreed to take no more testimony in the time set for his taking his testimony-in-chief, waiving his right thereto and allowing Hoag to serve immediate and formal notice, with names of witnesses, &c., to be examined in his behalf, and to commence the taking of the same in Marsh's time on Monday, at two (2) o'clock p. m., to be continued from day to day until completed, and Martin Metcalf, of counsel for and attorney for Marsh, hereby protests against the taking of any testimony by said Hoag on any other understanding whatsoever.

Counsel for Nichols, Shepard & Co., assignee, &c., states, in answer to the protest made by Martin Metcalf, attorney for Marsh, that he is present with the witnesses as named in the notice given, as per stipulation of record in this case, and ready to proceed with their examination in accordance therewith, and that the stipulation referred to was drawn up at the request of all the parties in interest and was entered into in good faith by him; that after the service of notice of taking of testimony on behalf of said Hoag, assignor, and giving names of the witnesses, thus carrying out his part of the agreement in good faith, the said Martin Metcalf, attorney for Marsh, now protests against the examination of said witnesses and attempts to put a construction upon the stipulation, which construction would compel the attorney for Nichols, Shepard & Co., assignee, &c., to take all of his testimony, not only in chief, but also in rebuttal, at this time, and as this was not his understanding or intent he feels compelled, under the circumstances, to withdraw his consent to the stipulation, and also to withdraw the notice of taking testimony at this time.

The said attorney for Nichols, Shepard & Co., assignees, &c., verily believes that said stipulation was entered into by said Martin Metcalf, attorney for Marsh, for the purpose of obtaining the names of the

witnesses to be examined on behalf of said Hoag and Nichols, Shepard & Co., assignees, &c., and that it was his intention
755 to enter said objection at this time so that said attorney for Nichols, Shepard & Co., assignees, &c., would feel obliged to withdraw the notice of taking said testimony or else, by taking said testimony, to assent or seem to assent to the construction he, said Martin Metcalf, attorney for Marsh, now claims to give said stipulation; and said attorney for Nichols, Shepard & Co., assignees, &c., requests the officer who took the testimony of the said Marsh and other witnesses in this case, before whom the testimony of said Nichols, Shepard & Co. was to be taken, to state that the stipulation was read to the attorneys present in this case and to said Marsh, and that he, the said officer, was authorized to enter the said stipulation of record, and that he did so enter said stipulation with the consent of all parties. Said attorney for Nichols, Shepard & Co., assignees, &c., gives notice that in declining at this time to proceed with the examination of witnesses on behalf of said Hoag and Nichols, Shepard & Co., assignees, &c., *at this time* he reserves all rights and privileges relative to the taking of the testimony at the proper times and places relating to this case. Said attorney for Nichols, Shepard & Co., assignees, &c., also gives notice that at the proper time he will offer and file an affidavit in this case with the Commissioner of Patents relating to the subject-matter of this statement and the case in issue. Counsel for Nichols, Shepard & Co., assignees, &c., asks and requests that the officer taking the testimony in this case *that he* will furnish said attorney a certified copy of all the testimony taken on behalf of Marsh, and also with the statements made to-day by the respective attorneys in this case, as the same appears in his record, for which he now tenders payment.

I, Eugene M. Converse, the officer before whom the testimony of E. A. Marsh and other witnesses in this case was taken and before whom the testimony of said Nichols, Shepard & Co., assignees,
756 &c., was to be taken, do hereby state that the stipulation entered of the record in this case on the 25th of March, 1882, was read by me to the attorneys present in this case—Alex. Mahon, for Nichols, Shepard & Co., assignees, &c., and Martin Metcalf, for E. A. Marsh—and also to said E. A. Marsh, and that I was then authorized to enter the said stipulation of record, and that I did so enter said stipulation of record with the consent of all parties.

Dated March 27, 1882.

EUGENE M. CONVERSE,
Notary Public.

Martin Metcalf, of counsel and attorney for Marsh, desires a record made of the following facts, to wit: That at an early stage of these interference proceedings Mr. Metcalf received, through his associate counsel and attorney, Col. C. M. Alexander, of Washington city, overtures from Mr. Smith, counsel of record for Hoag, suggesting such a mutual agreement for the taking of the testimony of both parties to the interference at the same time and place. Answer was

returned that it was then too early, Mr. Metcalf not knowing enough of the case to warrant it, but would try and extend every possible courtesy in that direction consistent with his duties to his client. Later Mr. Metcalf was approached by Mr. E. C. Nichols, of the firm of Nichols, Shepard & Co., with a proposition looking in the same direction, which resulted in the understanding embodied in a certain agreement, which was reduced to writing and two (2) copies thereof printed by the type-writer in the office of Nichols, Shepard & Co., one each to be sent to the respective attorneys of record of Marsh and Hoag, residents of Washington city, subject to their approval and signature. Mr. Metcalf, in fulfillment of his agreement, signed and forwarded his copy to Col. Alexander, before-mentioned attorney of record at Washington, enclosing a formal notice of the
757 time and place then agreed on, together with the names and residences of Marsh's witnesses, the said E. C. Nichols offering on his own part no objection to the terms. Mr. Metcalf received the said notice of time and place, &c., duly signed by Smith, attorney for Hoag, accompanied by the said printed agreement, signed by Metcalf, of attorney for Marsh, Mr. Smith objecting to acquiesce in the agreement after receiving our formal notice, with names of witnesses as aforesaid, and referring the matter back to the parties here, who *has* never yet raised an objection, so far as I know. Mr. Metcalf, of counsel and attorney for Marsh, now refers to the recorded notice aforesaid appearing in evidence, with the names of said witnesses, &c., to be examined, and to continue from day to day until completed. The said printed agreement is herewith presented, and Mr. Metcalf requests that it be annexed to and form a part of this side show, that it may appear that their whole understanding and misunderstanding has grown out of, perhaps, an undue desire on the part of Mr. Metcalf, attorney for Marsh, to accommodate in every way and extend every possible courtesy to Mr. Hoag, Mr. E. C. Nichols, the firm of Nichols, Shepard & Co., and their attorney of record, whose residence was distant from the city of Battle Creek. And now, for reasons best known to those who have failed to make them apparent to Mr. Metcalf, comes Mr. E. C. Nichols and insists upon the carrying out of a different arrangement, which, it is claimed, is embodied in a written stipulation Mr. Metcalf does not deny he entered into, but with a different understanding of its true meaning, as is conjectured, than the one Mr. Metcalf intended or now believes the language employed, shorn of ambiguity, fairly justifies, and charges Mr. Metcalf with a trick, substantially, with the sinister purposes of obtaining the names of the witnesses proposed to be examined, commencing to-day and continuing from day to day until completed; this after Mr. Metcalf had given the opposing parties the names and residences of Marsh's witnesses and had duly obtained a list of theirs, on Saturday, the 25th instant. After
758 closing Marsh's testimony-in-chief the jewel of consistency may be looked for in the record, when completed, as Mr. Metcalf will see that it is before the whole case closes, and here rests

content, so far as he or the interests of his clients is concerned. Hereafter we ask no quarter and give none.

Dated March 27, 1882.

EUGENE M. CONVERSE,
Notary Public.

In the matter of the interference between the application of Elon A. Marsh, of Battle Creek, Calhoun county, Michigan, for improvements in reversing gear for steam-engines, filed September 28th, 1881, and the patent of Andrew J. Hoag, of the same place, for like improvements, filed June 9th, 1881, the following stipulation has been entered into, to wit:

That the said Marsh consented to an arrangement whereby Mr. E. C. Nichols has been able to communicate with the attorney for Hoag for the purpose of agreeing on a time and place for taking the testimony-in-chief of both parties in the above-cited cause; and the said attorney for Hoag having indicated "Thursday," the 23d instant, and the office of Eugene M. Converse, Esq., and before him, it is hereby agreed between the parties interested and their attorneys to commence the taking of said testimony on said day agreeably to formal notices to that effect, with the names of witnesses to be examined, bearing even date herewith; and it is further provided and agreed by and between the parties thereto that in case of the sickness of a witness or unavoidable and unlooked-for absence of the attorney for either party a brief adjournment or postponement may be had until
759 such time as the said attorneys or their principals shall fix upon.

Dated at Battle Creek, Michigan, this 18th day of March, 1882.

MARTIN METCALF,
Of Attorney for Marsh.

STATE OF MICHIGAN, }
County of Calhoun, } *ss:*

At the city of Battle Creek, in Calhoun county, State of Michigan, on the 27th of March, A. D. 1882, at the time and place named in the notice hereto attached, appeared Alex. Mahon, Esq., for and in behalf of Nichols, Shepard & Co., assignees of A. J. Hoag, for the purpose of taking testimony of witnesses in the matter of the interference between the application of E. A. Marsh, filed September 28th, 1881, and the reissued letters patent granted to Nichols, Shepard & Co., assignees of A. J. Hoag, No. 9951, November 29th, 1881, for improvements in reversing gear for steam-engines, before the Commissioner of Patents. The said Elon A. Marsh was duly notified, as appears by the original notice hereto annexed, and attended by Martin Metcalf, Esq., his attorney and of counsel. The proceedings before me then and there had appear from the foregoing record.

EUGENE M. CONVERSE,
Notary Public in and for Calhoun Co., Mich.

760 Before the Commissioner of Patents.

In the matter of the interference between the application of Elon A. Marsh for a patent for improvement in reversing gear for steam-engines and reissued letters patent No. 9951, granted November 29, 1881, to A. J. Hoag, assignor to Nichols, Shepard & Co., now pending before the Commissioner of Patents.

Testimony in Rebuttal in Behalf of E. A. Marsh.

761 Before the Commissioner of Patents.

In the matter of the interference between the application of E. A. Marsh, filed September 28th, 1881, and the reissue patent granted Nichols, Shepard & Co., assignees of A. J. Hoag, November 29th, 1881.

Depositions of witnesses examined in rebuttal on behalf of E. A. Marsh, pursuant to the annexed notice, at the office of Frank G. Reynolds, in the city of Battle Creek, Calhoun county, State of Michigan, on Monday, May 8th, 1882.

Present: Martin Metcalf, Esq., on behalf of E. A. Marsh, and Alex. Mahon, Esq., on behalf of Nichols, Shepard & Co.

762 E. A. MARSH, a witness produced in rebuttal, being by me duly sworn, does depose and say, in answer to interrogatories proposed to him by MARTIN METCALF, Esqr., counsel for E. A. Marsh, as follows, to wit:

Ques. 1. You are the Elon A. Marsh, one of the parties to this suit and the same person already sworn, are you not?

Ans. 1. I am.

Ques. 2. When, if ever, did you exhibit and explain to Andrew J. Hoag your invention involved in this controversy?

Ans. 2. In the latter part of June or the first part of July, 1880.

Counsel for Nichols, Shepard & Co. objects to question and answer for the reason that it has not been proved that E. A. Marsh ever made the invention in controversy.

Ques. 3. Where was that done and in whose presence?

Ans. 3. At the office of the Nightly Moon, in this city, in the presence of Martin E. Brown and others.

Ques. 4. Please go on and state how you explain the invention, what was said and done by you and Mr. Hoag on that occasion in reference to this invention.

Counsel for Nichols, Shepard & Co. objects to the question, not proper rebuttal, and for the reason that it has not been shown, as before stated, that Mr. Marsh made the invention in controversy.

Hoag, Cross-Q. 5 & 6, p. 7.

Ans. 4. Mr. Hoag and I had been talking about this device and its application to traction engines. To more clearly convey my ideas I invited him to go with me to the office of the Nightly Moon and there examine one of my valve gears in operation. He did so, and by permission of Mr. Brown, proprietor of the printing office, Mr. Hoag reversed the engine and examined it critically. I explained to him how I intended to

apply the device to traction engines. I told him that for convenience it would be better to have the quadrant plate and stops placed at the other end of the reach rod and thereby connected to the device so as to be in convenient reach of the operator. Mr. Hoag assented to this arrangement, and said he would like to have the device put on one of Nichols, Shepard & Co.'s engines.

Ques. 5. When and where did you first explain the use of the adjustable stops to Mr. Hoag, if ever?

Counsel for Nichols, Shepard & Co. objects to the question as not being proper rebuttal, and for the further reason that as before stated that it has not been proven that Mr. Marsh ever had or
763 applied the adjustable stops as claimed by Mr. Hoag in his patent or involved in the invention in controversy.

Ans. 5. The adjustable stops were on the engine in the printing office last referred to, and I pointed them out to Mr. Hoag with the remark it would probably be unnecessary to have them adjustable, and that if I put one of these devices on a traction engine for Nichols, Shepard & Company I would make the stops rigid.

Ques. 6. When and where, if ever, did you exhibit and explain these adjustable stops to Mr. E. C. Nichols, of the firm of Nichols, Shepard & Co.?

Counsel for Nichols, Shepard & Co. objects to the question as not being proper rebuttal and for the reason that it has not been proven what said adjustable stops are or their purpose as applied to the so-called Moon engine, and for the further reason, as before stated, that it has not been proven on the record that Mr. Marsh ever applied adjustable stops as covered by the invention in controversy.

Ans. 6. Some time in the month of March, 1880, Mr. E. C. Nichols, of the firm of Nichols, Shepard & Co., went with me to a room in the Eldred block to see one of my valve gears in operation. I had the engine steamed up, and Mr. Nichols operated the reversing lever and asked me a number of questions about the device, and I believe made a very thorough examination of it. I explained to him the object of the stops and the manner in which I proposed to apply my device to traction engines.

Ques. 7. Did that engine reverser or any other made by you depend upon *upon* friction or any other device for holding the reversing lever in position than stops, either fixed or adjustable?

Counsel for Nichols, Shepard & Co. objects to the question as being misleading and not proper rebuttal and irrelevant.

Ans. 7. No.

Ques. 8. Is it or not possible to reverse a steam-engine with your valve gear attached without the stops?

Counsel for Nichols, Shepard & Co. objects to question as not proper rebuttal and as having no bearing on the case in controversy.

Ans. 8. It would be impossible or, to say the least, impractical.

Ques. 9. When you went to the shops of Nichols, Shepard & Company, in the autumn of 1880, and was engaged in applying your reversing gear to one of their traction engines, did Mr. Andrew J. Hoag hand to you a sheet-iron pattern for a stop plate of his alleged invention for you to get one made for him or not?

764 Ans. 9. Mr. Hoag did not hand me a sheet-iron pattern for such a purpose or for any other purpose.

Ques. 10. Did Mr. Hoag suggest to you or intimate at any time while you were engaged in applying your reversing gear at the said shops of Nichols, Shepard & Co. that he had invented any part of the device that was then and there applied to a traction engine?

Counsel for Nichols, Shepard & Co. objects to the question as having no bearing on the case in controversy.

Ans. 10. He did not.

Ques. 11. Who made the stop plate and who gave directions? You may go on now and state the day and hour and particulars concerning the stop plate.

Counsel for Nichols, Shepard & Co. objects to the question as leading, not being proper rebuttal, and not warranted by the testimony-in-chief on behalf of Marsh.

Ans. 11. On the morning of the eighth of September, 1880, I think about eight o'clock in the forenoon, after having tried my device at the works of Nichols, Shepard & Company without stops being placed near to the swinging frame, I instructed Mr. Rainbow, a blacksmith employed by Nichols, Shepard & Company, to make a stop plate out of wrought iron to be used as a stop for this device that I had put on this engine before mentioned, and for his guidance I made a sketch on the shop floor with a piece of chalk and gave him the dimensions. After he made the forging we went out to the engine together and fitted it to the boiler; after that I marked the position of the holes I desired to make in the piece, and, with the assistance of John Henry, drilled the holes and put in a set-screw to be used as an adjustable stop. In this instance I did not need but one set-screw, as the counter-adjustment could be obtained by moving the strap or stop plate horizontally on the boiler. After getting the location of the stop plate on the engine I, with the assistance of John Henry, secured the same to the boiler of the engine.

Ques. 12. How many holes were drilled in the stop plate to secure it to the boiler, and what position did they occupy relatively to the engine shaft?

Counsel for Nichols, Shepard & Co. objects to the question as leading and not warranted by the direct examination of Marsh.

Ans. 12. There were two holes drilled in the stop plate for the purpose of securing it to the boiler, and they were in a line with or nearly parallel to the main engine shaft.

765 Ques. 13. Before applying this stop plate did you run the engine—that is, with the traction applied?

Ans. 13. I did.

Ques. 14. Did you do this on the first or second day? State about this.

Counsel for Nichols, Shepard & Co. objects to the question as not warranted by the direct examination of Marsh, and not proper rebuttal.

Ans. 14. I run the engine without stops placed near to the device on the first day of my trial of this engine, both with and without the traction applied.

By consent of counsel for respective parties hereto, taking of testimony is adjourned to one thirty o'clock this p. m., at my office, in the city of Battle Creek, Michigan.

FRANK G. REYNOLDS,
Notary Public.

At the office of Frank G. Reynolds, in the city of Battle Creek, Michigan, May eighth, 1882, at one thirty p. m., counsel for respective parties appear, pursuant to the adjournment this a. m., and continue the examination in rebuttal of Elon A. Marsh:

Ques. 15. What was the nature of the reach rod first applied? Please give the size and form of the first and second ones used, and when they were applied.

Counsel for Nichols, Shepard & Co. objects to question as leading, not proper rebuttal, and not warranted by the direct examination of Marsh.

Ans. 15. The first reach rod used by me in this test was made of round iron, three-fourths of an inch in diameter. The second one used by me in this test was made of one-inch cold-rolled shafting.

Ques. 16. Am I to understand you as using both of these rods on the first day's test, or the seventh day of September, or otherwise?

Ans. 16. They were both used on the same day, on the seventh day of September, 1880.

Ques. 17. What do you mean by the term "test"—do you mean by that term a single trial on one day, or two or more trials?

Ans. 17. I mean by the word "test" a trial. The trial consisted in the omission of stops placed in position to engage with an
766 arm on the swinging frame, and as this trial continued throughout the day I referred to the matter as a "test."

Ques. 18. Did Mr. Charles K. Nelson or Samuel Bradley have anything to do with making or applying the stop plates with the engine on either the seventh or eighth days of September, 1880, at the said shops of Nichols, Shepard & Co.? If so, state what they did, or either of them.

Ans. 18. Neither Mr. Bradley nor Mr. Nelson — with the application of this device to my knowledge, and, as I was present during the working hours of the seventh and eighth days of that month, I certainly should have caught them at it if they did. I should have said at the beginning of this answer neither Mr. Bradley nor Mr. Nelson had anything to do with the application of this device at this time, to my knowledge.

Ques. 19. Did they at any time?

Ans. 19. They did not, to my knowledge.

Ques. 20. Did you see or speak to Mr. Bradley on either of the days referred to?

Ans. 20. I think Mr. Bradley was present on the seventh, but I did not see him on the eighth; I believe he was out of town.

Ques. 21. After the stop plate was applied—I mean now the stop plate with the set-screw you have testified about—what was done with the engine and who was assisting you, if anybody?

Counsel for Nichols, Shepard & Co. objects to question as not rebuttal and not warranted by the preliminary statement of Marsh or of the testimony-in-chief offered on behalf of Marsh.

Ans. 21. After the stop plate was applied I had the engine fired up. I believe Mr. David Shepard—

[On the margin: Probably rebuttal.]

—did the firing, and after getting up steam I called on Mr. Hoag to come and operate the steering wheel, and, I operating the reversing lever and throttle-valve, together we ran the engine around by the office and exhibited the workings of this device before the members of the firm of Nichols, Shepard & Co.

Ques. 22. Is the David Shepard referred to in your last answer a member of the firm of Nichols, Shepard & Co.; and, if yea, what position does he occupy, if you know?

Ans. 22. He is a member of the firm of Nichols, Shepards & Co., and is said to be vice-president of that company.

Ques. 23. Were you authorized by Mr. E. C. Nichols or the said David Shepard to call to your aid any assistance you might
767 require while applying your reversing gear to one of their traction engines, or not?

Counsel for Nichols, Shepard & Co. objects to question as irrelevant and immaterial.

Ans. 23. I was.

Ques. 24. While exhibiting the said engine with your reversing gear applied, as referred to in your answer "number 21," did you speak of the stop plates or stop applied to that engine on the eighth of September or hear it mentioned as the invention of Andrew J. Hoag or of any other person than Elon A. Marsh?

Counsel for Nichols, Shepard & Co. objects to question as not being proper rebuttal and not warranted by the preliminary statement nor the direct examination of Marsh.

Ans. 24. I did speak of the stop plates and called the attention of Mr. E. C. Nichols to it as the same thing I had told him of the evening before—

[On the margin: See N., p. 41, C. Q. 6.]

—when telling him the change I would make the following morning. I did not hear the invention referred to as Mr. Hoag's invention at that time nor during the trial of that engine.

Ques. 25. While exhibiting that engine at the Western fairs did you speak of the reversing gear applied to it or the stop plates or any portion of it as the invention of Andrew J. Hoag or hear any other person so designate it or any portion of it?

Ans. 25. I did not.

Ques. 26. Did you ever hear Andrew J. Hoag say that he was the inventor of the stop plate or stop referred to or any part of the device that was applied to the traction engine of Nichols, Shepard & Co. on the eighth day of September, 1880? And, if yea, state when and where first.

Ans. 26. Mr. Hoag never told *one* that he was the inventor of the stops or any portion of the device applied to the engine referred to, but in the latter part of July or first part of August, 1881, after obtaining a patent for adjustable stops, he informed me that he had secured a patent on that device, too. I was at the time running a steamboat on Goguac Lake in this vicinity, and it was on the landing place of this boat that the conversation took place. He wanted to know if I knew that he had taken out a patent for adjustable stops, and also wanted to know if, in view of that fact—whether we, Marsh, Lafever & Co., intended to continue our suit against Nichols, Shepard & Co. for infringement. I asked him how he dare swear that that was his invention when he had previously seen it in the Moon office on the engine referred to in this testimony. He says, Of course I saw that engine in the Moon office, but that
768 don't amount to nothing, and as long as we own one end of the patent the best thing you can do is to sell the other end to Nichols, Shepard & Co. He has never said anything about it to me since, and, as I was well aware that he was not entitled to the patent and that he knew it also, I have never since spoken to him about the matter.

Counsel for Nichols, Shepard & Co. objects to the above answer as not proper rebuttal, and states, as will be seen by Hon. Commissioner of Patents, that it is simply an attempt on the part of the witness to give his opinion as to who is the inventor of the device in controversy, which he has not yet been able to prove, either by his own testimony or the testimony of his witnesses that he made.

Counsel for Marsh desires to state that the witness has but given a bit of history incidental to this case, and the gratuitous statement of counsel for Nichols, Shepard & Co. that the witness Marsh has not yet proven up his case is about as unwarranted by the testimony as the statement of Hoag referred to by the witness Marsh. Counsel for Marsh desires further to state that both Marsh and his counsel are content to let the tribunal before whom the testimony shall come decide who did and who did not make the invention in controversy.

Ques. 27. Captain Marsh, how many models of your reversing gear for steam-engines having stops applied thereto had you made down to the first day of September, 1880?

Counsel for Nichols, Shepard & Co. objects to question as not

being proper rebuttal and not warranted by the preliminary statement of Marsh.

Ans. 27. Only two.

Ques. 28. Were the stops on these models ever taken off or dispensed with from the time the models were first made down to the present?

Counsel for Nichols, Shepard & Co. repeats above objection.

Ans. 28. They were not.

Ques. 29. Was the first model a working model or otherwise?

Counsel for Nichols, Shepard & Co. objects to question as not being proper rebuttal.

Ans. 29. It was a working model.

Ques. 30. Please examine figure one of "Exhibit A" and state whether or not you recognize therein a representation of the working model you last referred to; or, if not, point out the difference or differences.

Paper marked by me for identification as a certified copy of "Marsh's Exhibit A" introduced and handed to the witness.

769 Counsel for Nichols, Shepard & Co. objects to the introduction of the paper in evidence, not being proper rebuttal, and also objects to the question for the same reason.

Ans. 30. If we omit the dotted lines shown in this drawing, figure one, we will then have an exact representation of the first model.

Ques. 31. Was or was not the small model you exhibited to Mr. E. C. Nichols at the office of Nichols, Shepard & Co., preparatory to the introduction of your reversing gear for steam-engines at their said works, the second model you referred to above?

Counsel for Nichols, Shepard & Co. objects to question as not being proper rebuttal and not warranted by the preliminary statement of Marsh.

Ans. 31. It was.

Ques. 32. Where is that model now, if you know, and where had it been just before you took it to the office of Nichols, Shepard & Co.?

Counsel for Nichols, Shepard & Co. repeats above objection.

Ans. 32. That model is now in the Patent Office, in Washington, and forms part of my application for a patent on the invention involved in this controversy. Previous to the time I showed it to Mr. E. C. Nichols at the office of Nichols, Shepard & Co. it had been and was for some time in the office of Munn & Co. in New York or Washington; I can't state definitely.

Ques. 33. In its original form did it have fixed stops or adjustable stops for determining the throw of the reversing lever?

Counsel for Nichols, Shepard & Co. objects to the question as not being proper rebuttal.

Ans. 33. It had fixed stops.

Ques. 34. Captain Marsh, with an equal degree of heat in the boiler and equal pressure of steam in the engine cylinder will the power required to move the slide valves be equal or unequal on a stationary and traction engine doing the same work?

Counsel for Nichols, Shepard & Co. objects to the question as being irrelevant, immaterial, and not proper rebuttal.

Ans. 34. Yes; all other things considered equal, the power required to move the valve should and undoubtedly would be the same.

Ques. 35. Will or will not the power required to move the slide valve be any greater or less in a traction or stationary engine whether the power of the one be applied to propel the engine on an unequal roadway or the power of the other be used to drive machinery having equally constantly varying resistance?

770 Counsel for Nichols, Shepard & Co. repeats the objection to question 34.

Ans. 35. The power necessary to drive each engine, as stated in the question, being the same, the power to move the valve would be no greater in one engine than the other.

Ques. 36. Will or will not the pressure on the slide valve of a steam-engine, stationary or traction, be any different when both are exerting all their power and against equal or unequal resistance?

Counsel for Nichols, Shepard & Co. objects to question for the same reason as is given in the objection to question 34.

Ans. 36. It would.

Ques. 37. Please explain. I want to see if you understand my question 36. Please re-read question 36.

Counsel for Nichols, Shepard & Co. repeats the objection.

Ans. 37. I understood question 36 that you wanted to know if the pressure on the valves of the two engines, one traction and one stationary and both exerting their full power or each the same power in a less degree, would be the same with a given boiler pressure.

Ques. 38. You don't yet understand my question number 36. Will or will not the power required to move the slide valve of a steam-engine, traction or stationary, be any different when both are exerting all their power?

Counsel for Nichols, Shepard & Co. repeats the above objection.

Ans. 38. The power required to move the slide valves would be the same in both cases.

Ques. 39. Mr. Marsh, how frequently did you meet and have conversation with Mr. Andrew J. Hoag during the spring and summer of 1880, and especially during the autumn and winter of 1880 and 1881?

Ans. 39. I had occasion to meet Mr. Hoag very frequently during

the latter part of the summer and in the autumn and winter of 1880, and had frequent talks with him.

Ques. 40. You say winter of 1880. Do you mean 1880 and 1881 or otherwise?

Ans. 40. I mean the winter of 1880, as about the 25th of December, 1880, I went away and spent the larger portion of my time during the first half of the following year away from home.

771 Ques. 41. After the time you applied your reversing gear to one of Nichols, Shepard and Co.'s engines and down to the said 25th day of December, 1880, did you have occasion to see and have conversation with Mr. E. C. Nichols, of said firm; and, if yea, about how often did you have such conversations?

Ans. 41. There seems to be a mistake in the date of my answer in this question. I referred to the 25th day of December, 1881.

Counsel for Elon A. Marsh states that the question numbered 41—that inasmuch as the question numbered 41 was misunderstood by the witness the same is withdrawn.

By consent of counsel for respective parties to this suit further taking of testimony is adjourned to nine o'clock a. m. to-morrow morning, May 9th, 1882, at my office, in the city of Battle Creek, Michigan.

FRANK G. REYNOLDS,
Notary Public.

At the office of Frank G. Reynolds, in the city of Battle Creek, county of Calhoun and State of Michigan, May 9th, 1882, at 9 o'clock a. m., parties appear pursuant to adjournment had May 8th, 1882. Taking of depositions continued.

The witness, E. A. Marsh, desires to make a statement as follows, to wit: I wish to state for my own benefit and in explanation of the apparent confusion manifested by me in answer to question 36 and subsequent questions that during the rendering of the greater part of my testimony yesterday I was totally unfit, by reason of a severe attack of nervous headache, to occupy the witness chair, but owing to the limited amount of time left for the giving of such testimony I felt it necessary to do the best I could; and I wish to call the attention of the examiner to my answer 41 and my attempt to correct the date, which was right, and should be 1880, and that it was on account of this confusion that the further taking of testimony on yesterday was postponed at my request until to-day.

Counsel for Marsh feels it incumbent upon himself to state here and now what every person conversant with Mr. Marsh knows to be the fact, that he has been in very poor health for some time past and has been obliged to relinquish a covenanted and lucrative employment in consequence thereof, and attorney for Marsh fur-

772 ther says that during the dinner hour on yesterday Mr. Marsh requested to be relieved for the remainder of the day, which his said counsel did not feel himself authorized to ask of opposing counsel, and that the said attorney for Marsh was well advised by Mr. Marsh of his condition, but saw no help for it, as above stated.

Counsel for Nichols, Shepard & Co. objects to the statement made by Marsh and also the statement of his attorney, Martin Metcalf, Esq., as unwarranted, and further desires to state that while Mr. Marsh, previous to the usual hour for adjournment, stated that he was sick that at the 12 o'clock hour he had heard nothing of the kind mentioned, and he will state that if Mr. Metcalf or Mr. Marsh had have suggested or even intimated to him that they would like to adjourn the case he certainly would have interposed no objection, and he thinks that his actions in the case have not proven, as attempted to be inferred by Mr. Metcalf, that he would have interposed an objection or done anything which would have been otherwise than to treat Mr. Marsh and his attorney with all possible courtesy.

Counsel for Marsh utterly disclaims the imputation seemingly attributed to him. He simply desires to put on record the facts stated, and had no thought that the opposing counsel would object to an adjournment; but as Mr. Marsh had stated our time is limited and we could ill afford an adjournment if it could be avoided, what I had in mind was that opposing counsel would probably object to the recall of Mr. Marsh if he left the witness stand before completing his testimony to give place to other witnesses, which the circumstances of the case would seem to compel us to ask for.

Not rebuttal.

Ques. 42. Mr. Marsh, did you have a conversation with Mr. Andrew J. Hoag at the shops of Nichols. Shepard & Co. some time in the late fall or early winter of 1880 in reference to setting the stops for fixing the throw of the reversing lever of a reversing gear applied to a steam-engine, as involved in this controversy? And, if yea, state what was said, and the time, as near as you can fix it.

Counsel for Nichols, Shepard & Co. objects to question as immaterial and not proper rebuttal.

Ans. 42. I did have a conversation with Mr. Hoag about the setting of this valve gear, or particularly the location of the stops. I can't state positively what day it was. I think it was about the middle of December, 1880. My attention was called to the matter by a report circulated among the mechanics of this city that Mr.
773 Hoag and his assistants, after working on the gear for several days trying to set the valve and find the proper location for the stops, were unsuccessful. Not fairly crediting the report, I went up to the shops of Nichols, Shepard & Co., and Mr. Hoag asked me how I set the valve. I told him that such information would be freely given when Nichols, Shepard & Co. had obtained the right to use my valve gear.

Ques. 43. Was or was not Mr. E. C. Nichols, of the firm of Nichols, Shepard & Co., at that time and for some time thereafter negotiating with you for the right to use the invention in controversy?

[On the margin:] Ditto.

Counsel for Nichols, Shepard & Co. objects to question as immaterial and not proper rebuttal.

Ans. 43. Yes; we had numerous conversations about the matter—Mr. Nichols and I—which I understood to be negotiations on his part for the use of my valve gear as applied to traction engines before mentioned.

Ques. 44. Did Mr. E. C. Nichols make any declaration in the nature of a threat in case you and he did not come to terms in relation to the use of the invention in controversy. And, if yea, state the circumstances.

Objection repeated by counsel for Nichols, Shepard & Co.

Ans. 44. Yes. He said that if he couldn't make terms that would suit him he would fortify the invention with some patents he knew of and use it without my consent.

Ques. 45. Down to the time of the commencement of your suit against Nichols, Shepard & Co. for the infringement of your original patent did he, Edwin C. Nichols, or Mr. Andrew J. Hoag or any person in his or their behalf lay claim to the invention in controversy, so far as you know?

Counsel for Nichols, Shepard & Co. objects to question as entirely irrelevant.

Ans. 45. No, sir.

Ques. 46. Did Mr. Edwin C. Nichols ever propose to you to go in with you and procure a patent on this invention and work it together or not?

Counsel for Nichols, Shepard & Co. objects to question as not proper rebuttal.

Ans. 46. Mr. Nichols did make a proposal to me which I understood to mean substantially what the question implies.

Ques. 47. In case you did not so decide to do, and in the contingency that you and he could not otherwise agree on terms for the use of the invention in controversy, did he, Mr. Edwin C. Nichols, for himself and in behalf of the firm of Nichols, Shepard & Co., state that he would bury Mr. Marsh or the Marsh invention in sackcloth and ashes, or used words of like import, or not?

Question objected to as being leading and not proper rebuttal by counsel for Nichols, Shepard & Co.

774 Ans. 47. Yes. I have it on good authority that Mr. Edwin C. Nichols stated that he had used Marsh in that same spirit of liberality with which he done all things; that Marsh had not used him as he thought Marsh ought to use him, and he would make Marsh walk in sackcloth and ashes.

Counsel for Nichols, Shepard & Co. objects to the answer as being mere hearsay, and therefore inadmissible.

Further taking of testimony adjourned, by consent of counsel, to one o'clock p. m., May 9th, 1882, at my office, in the city of Battle Creek, Michigan.

FRANK G. REYNOLDS,
Notary Public.

At my office, in the city of Battle Creek, Michigan, May 9th, 1882, at one o'clock p. m., pursuant to adjournment had this a. m., taking of deposition of E. A. Marsh continued.

Counsel for Nichols, Shepard & Co. objects to the previous testimony for the reason heretofore given to questions and answers, —, without waiving said objection, proceeds to cross-examine the witness, E. A. Marsh.

Ques. 1. The model you have described as having been sent to Munn & Co. and as now being in the Patent Office at Washington, please state in what case that model was filed with, giving the date of filing, as near as you can.

Ans. 1. I think that model was filed on the 28th of September, 1881, in connection with my application for a patent involved in this interference.

Ques. 2. You state that the engine to which you applied your valve gear at the works of Nichols, Shepard & Co. could be made to move with the traction applied, and did move before the adjustable stops were applied; please state how far that engine did move.

Counsel for Marsh objects to both of the last above questions—the last as immaterial and the first as misleading and not warranted by the direct examination of the witness.

Ans. 2. The engine did run with the traction applied and before I applied the adjustable stops. I didn't measure the distance which the engine traveled over, but think it must have been several hundred feet.

Ques. 3. Was this before the second reach rod was applied?

Ans. 3. Yes; both before and after the second reach rod was applied.

Ques. 4. Why, then, if the engine operated as you say it did, with the small or first reach rod, why was a second or heavier reach rod substituted?

775 Ans. 4. Because the first reach rod was so small that the vibrations of the rod produced by the reciprocation of the valve was so great when the engine was running in a backward direction as to materially affect the working capacity of the engine.

Ques. 5. Did the application of the second reach rod remedy this defect?

Ans. 5. No; not fully; but it was a decided improvement, being larger and stiffer than the one first used.

Ques. 6. Did you ever apply a device to a traction engine constructed exactly like that shown in your application for a patent and now in controversy?

Counsel for Marsh objects to the question as immaterial.

Ans. 6. Yes; substantially the same.

Ques. 7. Please answer the question directly objected to by counsel for Marsh same as above.

Ans. 7. I have applied the device as shown in my application for a patent to a traction engine.

Ques. 8. In its identical form and having all the parts applied as there shown?

Counsel for Marsh objects to question as misleading.

Ans. 8. I have applied all the parts to a traction engine as there shown.

Ques. 9. When and where did you first apply to a traction engine, working size, all the devices for operating and controlling the reversing gear in the identical form and in all its parts as shown in your application for a patent involved in this controversy?

Counsel for Marsh objects to the question, same reason as above, and also question contains a misstatement of facts. The attention of the Commissioner of Patents is hereby called to this style of a question as evidently put for the purpose of confusing the witness.

Ans. 9. I have applied all of the essential elements of my invention involved in this controversy to both stationary and traction engines, first, in the early spring of 1880 to an upright stationary engine known as the Moon engine, referred to in this testimony; and, second, to a traction engine in the early winter or month of December, 1880, at the works of Garr, Scott & Co., at Richmond, Indiana.

Ques. 10. What was the size of the boiler of the first or stationary engine?

Counsel for Marsh objects to question as immaterial.

Ans. 10. I never measured the boiler to find its exact size.

776 Ques. 11. Can't you tell somewhere near its height and diameter?

Counsel for Marsh objects to question, same as above.

Ans. 11. I think I can. It is perhaps about 15 inches in diameter and 40 inches high.

Ques. 12. About how much water would that boiler hold?

Counsel for Marsh objects to these questions as immaterial, frivolous, and put evidently for the purpose of consuming time, and hereby calls the especial attention of the Commissioner of Patents thereto.

Ans. 12. Having never filled it full, I couldn't state.

Ques. 13. What was the largest quantity of water that you ever put in the boiler?

Counsel for Marsh objects to the question for the same reason as above.

Ans. 13. I never measured the amount of water I put in that boiler.

Ques. 14. What was the size of the cylinder, length and diameter, inside measurement?

Counsel for Marsh objects to question as incompetent and immaterial.

Ans. 14. The question is indefinite and will have to be put in proper form before I can answer it.

Ques. 15. It had a cylinder, did it not?

Ans. 15. It did.

Ques. 16. Then can't you give me the length and diameter of that cylinder, inside measurement?

Ans. 16. Let me state for the information of the counsel for Nichols, Shepard & Co. that the steam-cylinders for engines usually have more than one diameter, and if he will put his questions in a manner that can't be misunderstood I will answer them promptly and fully to the best of my ability. What is termed as the bore of a cylinder was in this engine about 2½ inches in diameter and the stroke of the piston was about four inches, as near as I can remember. Of course there was some space in the cylinder's length occupied by the depth of the piston, the clearance spaces, and the heads of the cylinder. It never was a matter of any consequence to me what the dimensions of this engine was or is; and for further information I refer the counsel for Nichols, Shepard & Co. to the engine in question, which is not more than six or eight hundred feet distant from this office.

Ques. 17. What was the device used for holding the lever by which the gear for reversing the engine was operated to the quadrant plate?

Counsel for Marsh objects to question as indefinite and misleading.

777 Ans. 17. The first device used for that purpose was a pair of wooden clamps, which clamped the lever tightly against the quadrant plate.

Ques. 18. What device did you afterwards use for this purpose?

Ans. 18. The quadrant plate, horizontally grooved and placed near to the device and allowing a projection on the swinging frame to traverse its entire length when partially rotated on the engine shaft, for the purpose of reversing the motion of the engine, substantially the same as shown on page 5 of Marsh, Lafever & Co.'s pamphlet, heretofore introduced in evidence, and the manner shown in my present application.

Ques. 19. Do I understand you that these changes were made on the first upright engine?

Counsel for Marsh objects to question as indefinite and misleading.

Ans. 19. In my last answer I did not refer to the upright engine.

Ques. 20. Are the wooden clamps described by you, for holding the lever on the small upright engine, used on said engine at this time?

Counsel for Marsh objects to the question as misleading and containing a misstatement of fact and not warranted by the testimony of this witness or any other in the case, and the attention of the

Hon. Commissioner of Patents is hereby again called to this style of badgering the witness.

Ans. 20. I do not think they are.

Ques. 21. What is used at this time to hold the lever which moves the gear to the quadrant plate?

Ans. 21. I do not think there is anything to hold the lever in place, unless, perhaps, a piece of iron or iron rod is laid against the lever to prevent the lever from bounding back from the stop when the engine is exerting considerable force.

Ques. 22. Then this iron rod is the only thing that holds the lever in position and prevents its free movement, back and forth, on the quadrant?

Counsel for Marsh objects to question as immaterial and incompetent.

Ans. 22. As a wrong impression of the form of this valve gear, as it now exists and has existed, seems to be aimed at, I will state that this valve gear consists of the two gear-wheels of equal diameter, one mounted on the main engine shaft and the other in a lever fulcrumed to the said engine shaft and capable of a movement partially around the first-mentioned wheel. The said lever has no right-angled projection, but projects upward in a line with the gear-wheels and forms a handle for reversing the motion of the engine. The said lever is arrested in its rotated movement by adjustable stops attached to a quadrant plate placed in juxtaposition
778 with the said lever. The reciprocating motion of the valve and the direction of the strain while in operation will, in some instances, cause the lever to rebound or vibrate latterly should any loss motion exist in the journal end of the lever attached to the shaft. That matter was considered by me from the very first, but was not provided for when I made the working model on the Moon engine. At the time I put the wooden clamps on, referred to, I, in company with Mr. Lafever, were taking some indicator diagrams from the engine, and, as the vibration referred to caused some discrepancy in the movement of the valve, this clamp was put on for the purpose of correcting such errors. As the device was not made with very great care and some loss motion did exist at the start, and as there must have been some wear since that, it is presumable that something might now be used to hold the lever or arm of this device against the quadrant plate.

Counsel for Nichols, Shepard & Co. objects to the answer as not responsive to the question, and now repeats the question.

Ques. 23. What device, other than the iron bar described by you, is now used to hold the lever which operates the gear engaged with the quadrant plate and prevents its vibration back and forth on said quadrant plate in this small upright engine?

Counsel for Marsh objects to the question as incompetent and immaterial.

Ans. 23. I do not know that there is anything to hold this lever

in place or to prevent vibration of any character other than the quadrant plate and the adjustable stops heretofore referred to and described.

Ques. 24. Did I understand you to say in one of your previous answers that the first time you applied the device as shown and described in your application for a patent — was involved in this interference was at the works of Garr, Scott & Co. the latter part of December, 1880?

Counsel for Marsh objects to the question as containing a misstatement of facts, and with the evident purpose of misleading the witness, to which the attention of the Hon. Commissioner of Patents is hereby again respectfully directed.

Ans. 24. I do not know how you have understood my answers.

Ques. 25. Please state when you first applied to a traction engine, working size, the devices as shown and claimed in your application for a patent, and now involved in this interference, for holding or limiting the throw of the gear.

779 Counsel for Marsh objects to the question as not proper cross-examination.

Ans. 25. I first applied to a traction engine all of the elements of my application that are now involved in this interference at the works of Nichols, Shepard & Co., in this city, on the 8th of September, 1880. Regarding other points of my invention as involved in my present application, that have no bearing on the case in controversy, I think I have already testified about more than can be legitimately required of me.

Redirect examination of witness by counsel for Marsh:

Ques. 1. Mr. Marsh, I now call your attention to cross-question one by counsel for Nichols, Shepard & Co. for the purpose of ascertaining just how you undestood the question, and whether or not your answer as recorded is understood by you or conveys your meaning, and for that purpose I will now ask you this question: Do you or do you not mean by your said answer that that model was filed, or you supposed it had been filed, in the Patent Office as a part of your amended original or first application for a patent, and that a model additional to that one was filed, as you supposed, in your present application? Please explain now what you meant and your understanding of the question. The notary will please read cross-question "one" and answer.

Counsel for Nichols, Shepard & Co. objects to the question as leading, and for the reason that the witness answered the question fully, and this question is simply put to have another construction put on the question and answer.

Counsel for Marsh objects to having counsel for Nichols, Shepard & Co. sit in judgment on the acts and motives of counsel for Marsh, or to consent to have any hindrance put in the way of any proper explanation of a real or supposed misapprehension of the question or of the language used in answer.

Ans. 1. In speaking of that model, in answer to cross-question "one," I confined myself to the matter in controversy and did omit to state that the same model was filed in my original or amended application for a patent. I know that an addition was made to this model at the time I filed my present application, and supposed the whole thing thereof a part of my application involved in this interference.

Ques. 2. Was the wooden clamp you have testified about as having been used on your working model applied to the Moon engine, so called, a temporary expedient for experimental purposes or was it a substantial change in the principles of construction and mode of operation of your reversing gear?

780 Counsel for Nichols, Shepard & Co. objects to the question as misleading.

Ans. 2. The wooden clamp referred to was one of the elements of my original invention, since adopted by me, but temporarily used at the time mentioned for the purpose already stated.

ELON A. MARSH.

Taken, subscribed, and sworn to before me this 9th day of May, 1882, at my office, in the city of Battle Creek, Michigan.

FRANK G. REYNOLDS,
Notary Public in and for Calhoun County.

By consent of counsel for the respective parties to this suit, further taking of testimony is hereby adjourned to 9 o'clock a. m. to-morrow morning, May 10th, 1882, at my office, in said city of Battle Creek, Michigan.

781 At the office of Frank G. Reynolds, in the city of Battle Creek, Michigan, May 10th, 1882, at 9 o'clock a. m., pursuant to adjournment had May 9th, 1882, taking of testimony in rebuttal on behalf of E. A. Marsh continued.

JOHN M. HENRY, a witness produced on behalf of E. A. Marsh, being by me duly sworn, does depose and say, in answer to interrogatories proposed to him by MARTIN METCALF, Esqr., counsel for E. A. Marsh, as follows, to wit:

Ques. 1. Please state your name, age, residence, and occupation.

Ans. 1. John M. Henry is my name; age, 32; residence, 46 Hall street, Battle Creek, Michigan; occupation, machinist.

Ques. 2. Are you acquainted with E. A. Marsh, Andrew J. Hoag, or either of them; and, if yea, how long have you known them?

Ans. 2. Ever since 1878.

Ques. 3. Do you know anything of the invention involved in this controversy; and, if yea, when did you first become acquainted with it?

Ans. 3. Yes, sir; I do; I can't state the exact time; I was to work there.

Ques. 4. Did you or did you not see Charles K. Nelson, Andrew J. Hoag, and Samuel Bradley, or either of them, engaged in drilling

or fitting the stop plate to the boiler of one of Nichols, Shepard & Co.'s traction engines, at the time Mr. Marsh was there engaged in applying one of his reversing gears to the said traction engine, in September, 1880?

Counsel for Nichols, Shepard & Co. objects to the question as leading, and for the reason no foundation has been laid by the previous answers of witness, and is therefore unwarranted.

Ans. 4. Not to my knowledge.

Ques. 5. Do you or do you not know that Mr. Marsh was so engaged in the month of September, at the said shops of Nichols, Shepard & Co.?

Counsel for Nichols, Shepard & Co. objects to question as leading.

Ans. 5. I do.

Ques. 6. Do you know who drilled the holes in said stop plate? And, if yea, go on and state what you know about it.

Objected to by counsel for Nichols, Shepard & Co. same as last above.

Ans. 6. I was to work for Nichols & Shepard's (witness wishes to correct his answer numbered 6, so as to read, "I was to work for Messrs. Nichols, Shepard & Co.," instead of Nichols & Shep-
782 ard's, as in his said answer stated) a washing windows. Mr. Marsh came in with a piece of iron and asked me if I would help him drill it, and as the shops was not running I pulled the belt for him to drill the piece; and when he got it drilled he asked me to tap out a half-inch hole while he got a set-screw to put in the hole. I took the piece and went to the vice, filed off the burr that was on the side of the piece, and tapped it out. Mr. Marsh came along and asked me if I had it done. I told him, Yes. He said, Fetch it along out to the engine. When we got out to the engine I handed him the piece; he placed it on the engine boiler and asked me to hold it while he marked it. I asked him then if that was all he wanted. He said it was, and I went back into the shop a washing windows again.

Ques. 7. How many holes did you and Mr. Marsh drill in that piece of iron, and in what position relative to each other were these holes, and the size of them? Please state.

Counsel for Nichols, Shepard & Co. objects to this and all previous questions and answers of this witness for reasons before given, and for the further reasons that the same are not warranted by the statement of Marsh or the previous testimony on behalf of Marsh.

Ans. 7. We drilled three holes; two holes for a $\frac{5}{8}$ths bolt and one hole for a $\frac{1}{2}$-inch set-screw.

Ques. 8. Did you see this engine with this stop plate or piece of iron attached to the boiler thereof afterward or not?

Objection to previous question repeated by counsel for Nichols, Shepard & Co.

Ans. 8. I saw the engine after that time, but I do not remember of noticing whether the stop was on or not.

Ques. 9. In what position relative to the main engine shaft were the $\frac{5}{8}$ths-inch bolt holes drilled—that is, were they drilled so as to be in line with the engine shaft and crosswise the boiler or lengthwise the boiler when the plate was in position or should be put in position, if you know?

Counsel for Nichols, Shepard & Co. objects to the question as leading and not warranted by the previous testimony of this witness.

Ans. 9. I did not see the holes put in the boiler, but the position that Mr. Marsh placed it and marked it was the two $\frac{5}{8}$ths holes was crosswise of the boiler, within line of the main shaft.

JOHN M. HENRY.

Taken, subscribed, and sworn to before me this 10th day of May, 1882, at my office, in the city of Battle Creek, Michigan.

FRANK G. REYNOLDS,
Notary Public in and for Calhoun County, Michigan.

783 ELI FLAGG, a witness produced in behalf of E. A. Marsh in rebuttal, being duly sworn, does depose and say, in answer to interrogatories proposed to him by MARTIN METCALF, Esq., counsel for E. A. Marsh, as follows, to wit:

Ques. 1. What is your name, age, residence, and occupation?

Ans. 1. My name is Eli W. Flagg; residence, city of Battle Creek; occupation, machinist.

Ques. 2. Are you acquainted with the parties to this suit; and, if yea, how long have you been acquainted with *him*?

Ans. 2. Yes, sir; I have been acquainted with all of them ten years.

Ques. 3. Do you know anything about this invention of Elon A. Marsh's in reversing gears for steam-engines as involved in this controversy; and, if yea, when did you first obtain a knowledge thereof?

Counsel for Nichols, Shepard & Co. objects to the question as being irrelevant and not proper and not conveying a proper statement in regard to the invention.

Ans. 3. I do; I couldn't tell very near the time that I first saw the engine with Marsh's reversing gear on it. I couldn't tell within six months of the time. I was invited up to a room by Mr. Marsh, where he had an engine in operation with a reversing gear attached and saw it in operation. It must have been more than two years ago.

Ques. 4. When did you first see a Marsh reversing gear applied to a traction engine, and where?

Counsel for Nichols, Shepard & Co. objects to the question as being irrelevant and immaterial.

Ans. 4. It must have been a year and a half ago or more, at the shops of Mess. Nichols, Shepard & Co.

Ques. 5. Mr. Flagg, where and by whom are you now employed and what position do you occupy?

Counsel for Nichols, Shepard & Co. objects to question as irrelevant.

Ans. 5. I am employed by the Upton Manufacturing Company. I am foreman of the machine shop.

Ques. 6. Does that company manufacture traction engines with the Marsh reversing gear in controversy applied thereto or not?

Counsel for Nichols, Shepard & Co. objects to the question as being irrelevant, immaterial, and not proper rebuttal.

Ans. 6. They do manufacture engines with the Marsh reversing gear in controversy attached.

784 Ques. 7. Are you acquainted with the principles of construction and mode of operation of said reversing gear as there applied?

Objection repeated by counsel for Nichols, Shepard & Co.

Ans. 7. Yes, sir; I have some knowledge of the construction and mode of operation of the reversing gear in question.

Ques. 8. Please examine the drawings on the paper you hold in your hand and state whether or not you recognize therein substantially the reversing gear as now applied to the traction engines made at the said shop of the Upton Manufacturing Company. (Paper handed the witness issued by the United States Patent Office, entitled "Reissued letters patent number 9951, dated November 29th, 1881, to Andrew J. Hoag, of Battle Creek, Michigan, assignor, &c.")

Counsel for Nichols, Shepard & Co. objects to the statement in reference to the paper as incompetent, and as to the question as being irrelevant and immaterial.

Ans. 8. The drawings on the paper are substantially the same as the reversing gear applied or attached to the engines made by the Upton Manufacturing Company.

Ques. 9. State, if you know, whether or not the said traction engines with the said reversing gear applied thereto and the stop plate marked "G" in this patent left off and dispensed with will operate as a traction engine—that is, will the reversing gear so constructed and applied move the engine on the road or cause it to be moved?

Counsel for Nichols, Shepard & Co. objects to question for reasons before given, and for the further reason that it has not been proved that said witness is an expert.

Ans. 9. I saw an engine in operation by Mr. Lafever about the 4th, I think, of the present month, and my attention was called to the fact that the stop plate marked "G" was left off. This engine was a propeller or road engine; it moved over the ground apparently

as well without the stop plate as with it. The engine operated by Mr. Lafever was one made by the Upton Manufacturing Company.

ELI W. FLAGG.

Taken, subscribed, and sworn to before me this 10th day of May, 1882.

FRANK G. REYNOLDS,
Notary Public.

By consent of counsel an adjournment taken until one o'clock p. m.

785 At the office of Frank G. Reynolds, in the city of Battle Creek, Michigan, May 10th, 1882, at one o'clock p. m., pursuant to adjournment had this a. m., taking of testimony in rebuttal on behalf of E. A. Marsh continued.

MARTIN E. BROWN, a witness produced in rebuttal in behalf of E. A. Marsh, being duly sworn, does depose and say, in answer to interrogatories proposed to him by MARTIN METCALF, Esq., counsel for said E. A. Marsh, as follows, to wit:

Ques. 1. Please give your name and age.

Ans. 1. Martin E. Brown; between 25 and 26 years old.

Ques. 2. Are you the Martin E. Brown heretofore sworn in this case, editor and proprietor — the "Nightly Moon" and "Weekly Citizen," newspapers published in this city?

Counsel for Nichols, Shepard & Co. objects to the question as irrelevant and immaterial.

Ans. 2. I am.

Ques. 3. Were you ever present when Mr. Marsh exhibited and explained the principles of construction and mode of operation of a certain reversing gear involved in this controversy, of his invention and construction, applied to the engine running the printing press that does the work of printing the newspapers aforesaid?

Hoag, C. Q. 5 & 6, p. 7.

Counsel for Nichols, Shepard & Co. objects to the question as irrelevant, immaterial, and not warranted by any of the previous testimony taken on behalf of Marsh.

Ans. 3. I was in the office, and he asked leave to exhibit it to Mr. Hoag. He frequently brought machinists up there to look at it.

Ques. 4. State when this was as near as you can; the first time, if more than once.

Objection repeated by counsel for Nichols, Shepard & Co.

Ans. 4. I can't tell exactly. The first time I remember of his being there with Mr. Hoag was some time in the summer of 1880—July, I think, about; were upstairs then, and the daily was then a morning paper, and during the evenings when the engine and press

were running Mr. Marsh would frequently bring in members of the machinists' society and other mechanics to exhibit the invention.

Ques. 5. Where was your printing office then located, if not where it is now?

786 Ans. 5. In the second story of Walter Clark's building, on east Main street; number 15, I think.

Ques. 6. Please fix the time more nearly, if you can, when you showed this device to Mr. Hoag, above referred to.

Counsel for Nichols, Shepard & Co. objects to the question as irrelevant, immaterial, and not warranted by previous testimony of Marsh.

Ans. 6. I did not exhibit the device to Mr. Hoag. Mr. Marsh operated the engine and explained it. He was there so many times that it is impossible for me to give the exact date, not paying any attention to it. To the best of my recollection it was June or July, 1880.

Ques. 7. Was the engine and the reversing device then operating it the same as now? And, if not, please point out the difference or differences.

Objection repeated by counsel for Nichols, Shepard & Co.

Ans. 7. It is the same.

Ques. 8. Do you or do you not know whether any member of the firm of Nichols, Shepard & Co. visited your said office at any time during the summer of 1880 and there inspected the Marsh reversing device you have just referred to?

Counsel for Nichols, Shepard & Co. repeats the above objection.

Ans. 8. I do not know that they did; if they did I was not in the office.

Counsel for Nichols, Shepard & Company objects to all the testimony of this witness, and without waiving said objection proceeds to cross-examine said witness.

Ques. 1. Mr. Brown, what device is used on this engine for holding the reversing lever engaged with the quadrant plate or prevents its swinging back and forth from the position at one end of the throw of the lever to the other end of the throw?

Ans. 1. There is no device on this engine. I once spoke to Mr. Marsh about having such a fixture on his invention, and he said that the larger engines had graduated arcs with grooves and a snap catch on the reversing handle to hold it in position.

[On the margin: It is presumed that they will attempt to show that the device on the Moon engine required something more to make it entirely practical, and that Hoag supplied this requirement by a combination of the stop, a reach rod, and a quadrant and notches.]

787 Ques. 2. Then on this engine referred to is the lever free to swing back and forth from one end of the throw to the other?

Ans. 2. It is, but never has bothered us in that way except when first turning on steam, when there is water in the cylinder chamber

or valve chamber, in which cases the stove poker is sometimes laid against the reversing handle until the steam works in the steam chamber and the water is blown out of the valve chamber.

Redirect examination by counsel for E. A. MARSH:

Ques. 1. You use the terms valve chamber and steam chamber as synonyms, do you not—that is, you mean the steam-chest or valve chamber in both cases, I suppose?

Ans. 1. By valve chamber I mean the steam-chest in which the valve works connected with the reverser, which alternately allows the steam to enter and cuts it off from the steam chambers or piston head.

MARTIN E. BROWN.

Taken, subscribed, and sworn to before me this 10th day of May, 1882.

FRANK G. REYNOLDS,
Notary Public.

788 EDWARD S. NEWMAN, a witness produced in rebuttal on behalf of E. A. Marsh, being duly sworn, does depose and say, in answer to interrogatories proposed to him by MARTIN METCALF, Esqr., counsel for E. A. Marsh, as follows, to wit:

Ques. 1. Please state your name, age, residence, and occupation.

Ans. 1. Edward S. Newman; age, between 26 and 27; residence, Battle Creek; occupation, machinist.

Ques. 2. Do you know the parties to this suit, Elon A. Marsh and Andrew J. Hoag and the firm of Nichols, Shepard & Co.; and, if so, how long have you known them?

Ans. 2. I have been acquainted with Mr. Marsh about eight or nine years, I think. I have been personally acquainted with Mr. Hoag for about three years, I think. I am not personally acquainted with any of the firm of Nichols, Shepard & Company.

Ques. 3. Do you know anything of the invention of Elon A. Marsh called a reversing gear for steam-engines as involved in this controversy?

Ans. 3. Well, I know what it is.

Ques. 4. When did you first become acquainted with it? You may state the time and circumstances as briefly and clearly as you can.

Ans. 4. The first time that I ever saw it was, I think, in September or October, 1880. I went up to the Moon office with George Marsh to examine it.

Counsel for Nichols, Shepard & Co. objects to the answer as immaterial and having no bearing on the case in controversy.

Ques. 5. Mr. Newman, where and by whom are you now employed, and are steam-engines with the Marsh reversing gear applied thereto manufactured where you work or not?

Counsel for Nichols, Shepard & Co. repeats above objection.

Ans. 5. I work at Upton's Manufacturing Company, and I am employed by them also; they manufacture steam-engines with Marsh's reverse gear on.

Ques. 6. Do you understand the construction and mode of operation of the said reversing gear as there made and applied to traction or road engines?

Ans. 6. Yes, sir.

Ques. 7. State if you know whether or not the said Marsh reversing gear will successfully operate and the engine be made to
789 propel itself with the stop plate that engages with the swinging arm carrying the reversing wheel left off or dispensed with.

Counsel for Nichols, Shepard & Co. objects to the question as incompetent and irrelevant.

Ans. 7. Yes; an engine can be run without the stops, as I took the stop off and Mr. La Fever run the engine with the traction gear on, both backward and forward, successfully.

Counsel for Nichols, Shepard & Co. objects to the foregoing testimony of this witness for reasons before given, and without waiving said objections proceeds to cross-examine said witness.

Ques. 1. Mr. Newman, you state, in your direct examination, that you are familiar with the principles of construction and mode of operation of reversing gear to traction engines, and also that you had seen a device applied to an engine in the office of the Moon. Now, please tell me whether, in your opinion as an expert, *whether* the principles of construction and mode of operation in both this traction — and the one mentioned as having been seen by you at the office of the Moon are the same.

Counsel for Marsh objects to the above question as unwarranted by any previous testimony of this witness, he not having testified as an expert, and for the further reason that the question is incompetent and not proper cross-examination, for reasons that are self-evident, and for the further reason that the question is evidently put for the purpose of misleading and confusing the witness.

Ans. 1. I can't answer that question as an expert.

Ques. 2. Please give me your opinion in regard to the matter, whether as an expert or otherwise.

Counsel for Marsh objects to the question, not proper cross-examination and not warranted by any testimony of this witness.

Ans. 2. The witness here asks the notary which question he is requested to give an opinion on. The notary then reads the cross-question 1 to the witness.

Counsel for Marsh now repeats his objection, and calls the attention of the Hon. Commissioner of Patents thereto, and now desires further to state that the question contains a misstatement of fact, and therefore incompetent and improper cross-examination.

The witness then states as follows: I cannot give my opinion as

to the difference in the construction of the two engines, as I
790 have not seen the Moon engine since 1880 and have forgotten how it was constructed, partly.

Ques. 3. Do you think it would be practical and that an engine could be made and sold and be capable of fulfilling all the requirements of a traction engine in which a reversing gear was used without applying the stop plate described as having been taken off by Mr. La Fever or yourself?

Counsel for Marsh objects to the question as immaterial for the purpose of this inquiry, and therefore also incompetent.

Ans. 3. No, sir; I don't think it would be practical.

EDWARD S. NEWMAN.

The foregoing deposition of Edward S. Newman was taken, subscribed, and sworn to before me this 10th day of May, 1882.

FRANK G. REYNOLDS,
Notary Public.

791 MINARD LAFEVER, a witness produced in rebuttal on behalf of E. A. Marsh, being duly sworn, does depose and say, in answer to interrogatories proposed to him by MARTIN METCALF, Esqr., counsel for said E. A. Marsh, as follows, to wit:

Ques. 1. You are the Minard Lafever heretofore sworn in this case, are you not?

Ans. 1. I am.

Ques. 2. Mr. Lafever, did you visit the shops of Nichols, Shepard & Co. in the autumn of the year 1880 and there inspect the traction engine on which Mr. Marsh had applied his reversing gear, heretofore mentioned in this controversy?

Counsel for Nichols, Shepard & Co. objects to the question as irrelevant and immaterial, and even if the materiality was shown the same would not be warranted by the preliminary statement offered in behalf of Marsh in this case.

Ans. 2. I did.

Ques. 3. Please state the time, as near as you can.

Counsel for Nichols, Shepard & Co. objects to the question for the reasons before given, and states, as he understands it, counsel for Marsh has, in this case, as well as in other questions to previous witnesses, saved the witness the trouble of either fixing dates or identifying the invention claimed by him, counsel for Marsh, to be in controversy.

Counsel for Marsh has but one word to say in reference to the attempted slur by counsel for Nichols, Shepard & Co., and that is this: He is quite willing it should go on record and pass or not pass current in the United States Patent Office like any other bogus coin.

Ans. 3. It was about the middle of September, 1880.

Ques. 4. Did you or not notice the stop plate on that engine and how it was fixed to the boiler?

Counsel for Nichols, Shepard & Co. objects to the question as being irrelevant and immaterial.

Ans. 4. I did.

Ques. 5. You may go on now and describe how it appeared at that time—that is, how it was fixed to the boiler, the position and size of the bolts by which it was attached, and the number thereof.

Counsel for Nichols, Shepard & Co. objects to the question, as well as to the previous one, as leading and also irrelevant and immaterial.

792 Ans. 5. It appeared as a piece of wrought iron attached to the boiler by two screws about $\frac{5}{8}$ of an inch in diameter. It was located at right angles to the boiler and parallel with the main engine shaft and under said shaft. At one end of this piece of wrought iron there was a third screw of about $\frac{1}{2}$ inch in diameter, that end of the piece of iron being bent to receive the screw.

Ques. 6. Did you or not notice the position of the bolts by which the said plate was attached to the boiler—whether in line with the boiler or otherwise?

Counsel for Nichols, Shepard & Co. objects to the question as immaterial and irrelevant.

Ans. 6. The bolts were located longitudinally with said piece of wrought iron and parallel with the main engine shaft, or nearly so.

By consent of counsel for respective parties hereto further taking of testimony is hereby adjourned to to-morrow morning, May 11th, 1882, at nine and one-half o'clock a. m., at the office of Frank G. Reynolds, Battle Creek, Michigan.

May 11th, 1882, at 9 and one-half o'clock a. m., counsel for respective parties appear at the office of Frank G. Reynolds, in the city of Battle Creek, Michigan, pursuant to adjournment had May 10th, 1882, and continue the taking of testimony in rebuttal in behalf of E. A. Marsh.

The taking of the deposition in rebuttal of MINARD LAFEVER continued:

Ques. 7. Since the time when you saw the engine with the Marsh reversing gear attached at the shops of Nichols, Shepard & Co., about which you testified on yesterday, have you had conversations with Andrew J. Hoag upon the subject of the invention in controversy?

Ans. 7. I have.

Ques. 8. You may go on now and state the time, occasion, and circumstances and the conversation had.

Not rebuttal.

Ans. 8. In September, 1880, I attended the Michigan State fair at Detroit and exhibited an engine there for R. B. Merritt, of this place. While stopping there I occupied a room with Mr. Hoag and others and saw Mr. Hoag at the fair every day and was with him several evenings during that week and accompanied him to and from the fair ground nearly if not every day. We occasionally had conversations relating to the Marsh reversing gear, which shortly before had been applied to one of Nichols, Shepard & Company's traction engines. Mr. Hoag mentioned the fact that Mr. Marsh was to take that engine to several Western fairs. He several times expressed himself as pleased with the working of Mr. Marsh's device.

793 Counsel for Nichols, Shepard & Co. objects to the last question and answer, being entirely irrelevant, immaterial, and having no bearing on the case in controversy.

Ques. 9. Did Mr. Hoag state in any of those conversations or intimate that he or any other person than E. A. Marsh was the sole and only inventor of the invention in controversy or any part of it?

Counsel for Nichols, Shepard & Co. objects to the question as being entirely immaterial and unwarranted by the previous testimony of this witness.

Ans. 9. No, sir; he did not, neither directly nor indirectly.

Ques. 10. Prior to the commencement of suit against the firm of Nichols, Shepard & Co. for infringement of the Marsh patent, heretofore referred to in this controversy, did Mr. Andrew J. Hoag or Mr. Edwin C. Nichols, or anybody in his or their behalf, state or intimate, to your knowledge, that any other person than Mr. Marsh was the sole inventor of the device in controversy or any part of it?

Counsel for Nichols, Shepard & Co. objects to the question as being entirely irrelevant and immaterial.

Ans. 10. They did not.

Ques. 11. Down to the time of the commencement of that suit did you have frequent conversations with Edwin C. Nichols in reference to the invention in controversy or not?

Objection repeated.

Ans. 11. I did not.

Ques. 12. Did you ever have any conversation with Edwin C. Nichols in reference to the invention in controversy, or were you present and hearing such conversations; and, if so, when, where, and for what purpose were such interviews held?

Counsel for Nichols, Shepard & Co. objects to the question as being leading and irrelevant.

Ans. 12. Shortly after the close of the direct examination for Mr. Marsh in this interference, in company with Mr. Scott and Mr. Marsh, we met Mr. Nichols, at his solicitation, in the office of Eugene M. Converse, in this city. The interview was evidently solicited and apparently so for the purpose of intimidation as connected with this suit. The interview to all parties was evidently of an unsatisfactory nature. It was but a reiteration of several previous interviews.

794 Ques. 13. State, if you know, whether or not the Marsh reversing gear applied, as it appears it was applied, on the 7th day of September, 1880, at the said shop of Nichols, Shepard & Co. can be made to operate with the traction gear in mesh so as to propel the engine back and forth—I mean with the stop plate now placed under the sleeve and engine shaft left off and dispensed with.

Counsel for Nichols, Shepard & Co. objects to the question as being

leading and not warranted by any of the previous testimony of this witness.

Ans. 13. It can.

Ques. 14. Is your last answer based on experimental or theoretical knowledge? Please state.

Objection repeated.

Ans. 14. It is based on both.

Ques. 15. You may go on and state particulars—that is, how you know.

Objection repeated.

Ans. 15. I had the stop plate, referred to in this controversy, taken off of a traction engine with the Marsh reversing gear attached, and myself operated the engine both directions, back and forth, without the aid of this stop plate.

Ques. 16. Mr. Lafever, will or will not the power required to move the slide valve be any greater or less in a traction or stationary engine whether the power of the one engine be applied to propel itself on an unequal roadway or the power of the other be used to drive machinery having equally, constantly varying resistance?

Counsel for Nichols, Shepard & Co. objects to the question as having no bearing on the case in controversy.

Ans. 16. It would be the same.

Ques. 17. Will or will not the pressure on the slide valve and consequent power required to move it be any different in a traction or stationary engine when both are exerting all their power and against like or equal or unequal resistance?

Counsel for Nichols, Shepard & Co. objects to the question as having no bearing on the case in controversy.

Ans. 17. No, sir.

Ques. 18. Please explain, if you can, briefly and clearly.

Objection repeated.

Ans. 18. Understanding the conditions to be the same in both cases, the results and effects would be the same.

795 Ques. 19. Will or will not the power required to move the slide valve of two equal traction engines carrying equal pressure of steam be the same whether the power of the one engine be applied to propel itself or the power of the other be transmitted and used, by cable or otherwise, to move the former over the same roadway, less the friction incidental to the extra mechanism employed?

Counsel for Nichols, Shepard & Co. objects to the question as being entirely irrelevant and immaterial.

Ans. 19. It would be the same.

By consent of counsel for respective parties hereto an adjourn-

ment is hereby taken until one o'clock p. m. this 11th day of May, 1882.

At the office of Frank G. Reynolds, in the city of Battle Creek, Michigan, May 11th, 1882, at one o'clock p. m., counsel for respective parties hereto appear, pursuant to adjournment had this a. m., and continue the taking of testimony in rebuttal on behalf of E. A. Marsh as follows, to wit:

Counsel for Nichols, Shepard & Co. objects to the testimony of this witness for the reasons before given and as not being proper rebuttal, and without waiving said objections proceeds to cross-examine said witness.

Ques. 1. You state in answer to one of the questions that the stop you saw at the works of Nichols, Shepard & Co. was located under the main shaft. Please tell me now the distance between the boiler and the under side of the main shaft.

Counsel for Marsh objects to the question as immaterial.

Ans. 1. I don't know the exact distance.

Ques. 2. Can't you tell me somewhere near the distance?

Counsel for Marsh objects same as above.

Ans. 2. The distance is not the same at any two points at one side of the vertical center line of the boiler. If you will confine your question to some point on the boiler I think I can approximate the distance.

Ques. 3. What was the distance between the boiler and the lower face of the shaft at the point where you say that the stop was located?

Counsel for Marsh objects to the question as immaterial.

Ans. 3. I would estimate the distance from four to five inches, but have never measured the distance.

Ques. 4. Was that engine provided with wooden or iron traction wheels?

Counsel for Marsh objects to question as immaterial and irrelevant.

796 Ans. 4. Referring back to the State fair held at Detroit in the fall of 1880, I will say that I saw the Hon. Mr. Hoag, Mr. Freed Shepard, and Mr. McKinney, their pattern-maker, taking measurements and critically scrutinizing the wrought-iron traction wheels upon which an engine manufactured by an Ohio company was mounted. As most of the points used by the firm of Nichols, Shepard & Co. on their engine are secured in a like manner, I think I can safely say that the engine that their attorney refers to was mounted on wooden traction wheels.

Counsel for Nichols, Shepard & Co. objects to the answer as not responsive.

Ques. 5. You state in one of your answers that you operated a traction engine with a valve gear with the stop plate removed. Now,

please state whether or not in your opinion a traction engine provided with a valve gear could be made and sold so as to operate successfully as a traction engine without said stop plate being applied.

Counsel for Marsh objects to the question as immaterial.

Ans. 5. I will state concerning that operation that it was or rather the experiment was made to demonstrate the utter fallacy of the testimony of Andrew J. Hoag and others of his witnesses touching that point as to the practicability of the experiment. I would consider it impracticable to be sold and used as a traction engine.

Ques. 6. You state in one of your answers that Mr. Marsh showed you a traction engine at the works of Nichols, Shepard & Co. with a stop plate. Did he remove that stop plate from the boiler while you were there?

Counsel for Marsh objects to the question as being misleading and further a misstatement of facts and not warranted by any testimony of this witness or any other testifying in the case, therefore incompetent.

Ans. 6. I have no recollection of making such a statement.

Ques. 7. When Mr. Marsh exhibited the engine at the works of Nichols, Shepard & Co., a traction engine upon which you noticed a stop plate, was that stop plate removed from that engine at that time by Mr. Marsh or any one else in your presence?

Counsel for Marsh objects to the question for same reasons above given.

Ans. 7. The stop plate was not removed in my presence.

Ques. 8. Then please tell me how you can fix and state so exactly the size of the screws by which said plate was secured to the boiler.

Counsel for Marsh objects to the question as not warranted by any previous testimony of this witness, incompetent, and misleading.

Ans. 8. I don't think that I stated the exact size of the screws.

Ques. 9. How are you enabled to fix the location and the
797 exact position of that stop on the boiler, and also the location of the screws by which it was held to the boiler?

Ans. 9. I have not fixed the exact location, but will say that at the time that Mr. Marsh applied this device and was applying it he held frequent consultations with me regarding the same. When an opportunity presented itself I went to the shops of Nichols, Shepard & Co. and viewed the engine with the said device attached.

Ques. 10. You state in your answer that this stop plate was placed under the engine shaft. Now please tell me how, if this was so, the holes could be punched in the boiler, as you state they were, for attaching this stop plate.

Counsel for Marsh objects to the question as immaterial and misleading.

Ans. 10. I did not state that the holes were punched in the boiler, and when I said that the stop plate was located under the shaft I

did not confine myself to stating the exact location of the plate. I would consider the stop under the shaft, and did so consider it, even if it was a few inches either side of a vertical center line through the shaft.

Ques. 11. Were you present when this stop plate was first applied to the engine?

Counsel for Marsh objects to the question as not warranted by any previous testimony of the witness, and therefore not proper cross-examination.

Ans. 11. I was not present.

Ques. 12. Then you only know from hearsay who applied this stop?

Counsel for Marsh objects to the question as not proper cross-examination, and the attention of the Hon. Commissioner of Patents is called to this continued persistent attempt to mislead and badger the witness.

Ans. 12. I heard Mr. Marsh testify under oath that he applied it whether you call it hearsay or not.

Ques. 13. Then you were present during the time Mr. Marsh gave his testimony in this case?

Counsel for Marsh objects to the question as immaterial.

Ans. 13. I was occasionally present.

Ques. 14. Were you not present most of the time or the greater part?

Objected to same as above.

Ans. 14. No, sir; I was not.

Ques. 15. Were you present when the witness, John Henry, gave his testimony in this case, all or the greater part of the time?

Ans. 15. I was not present.

798 Ques. 16. Mr. Lafever, did you in giving your testimony in the direct examination of the witnesses in behalf of Marsh, and also in testifying in this so-called rebuttal, invoke the witness of a Supreme Being or a God to the truthfulness of your statements when you so testified?

Ans. 16. You can't prove it by me who I invoked or what I invoked. I suppose that I took the customary oath.

Ques. 17. Did you feel under any greater obligations to state the truth than you would have in making the same statement to a friend?

Counsel for Marsh objects to the question as not proper cross-examination—question not warranted by any testimony heretofore given in this case by anybody on either side.

Ans. 17. I never felt under obligation to tell the truth, because I cannot tell a lie; but I felt under obligation to use the truth to my utmost ability in attaining justice and meting out justice to the respective parties in this controversy.

Ques. 18. I should now like to ask if you believe in a future reward or punishment for the acts of this life.

Counsel for Marsh protests against the further abuse of the sacred privilege of cross-examination of witnesses in this case, and he hereby calls the special attention of the Hon. Commissioner of Patents to said abuse and wanton waste of the valuable time of Marsh, now fast drawing to a close, it being now but four minutes to three o'clock p. m. of this eleventh of May and last day for the taking of his testimony. Counsel for Marsh further protests against the putting on trial here as of church discipline of this witness by this most conscientious and profound Washington theologian.

Ans. 18. It depends on whose acts you refer to. If he refers to his own I would think that the reward would not be very desirable.

Ques. 19. How in regard to yourself?

Counsel for Marsh objects to the question as immaterial and incompetent; objection last above repeated.

Ans. 19. Heretofore I did not believe that there was a hell, but now think that there must be one and should be one so that some Washington attorneys should receive their reward. As to myself, I shall not study law, and therefore, to a great extent, avoid the possibility of such a reward, Amen. I will now state that any further question or questions having a bearing outside of this matter in controversy will not be considered by myself while under oath.

Ques. 20. Do you believe in the Holy Scriptures, so called, and in Christianity?

799 Counsel for Marsh objects to the question as wholly irrelevant and not proper cross-examination, and the attention of the Hon. Commissioner of Patents is hereby again called to this persistent waste of our valuable time for no other purpose than to defeat the ends of justice, that the guilty may escape that just punishment he, the said counsel for Nichols, Shepard & Co., seems so greatly solicitous about.

Ans. 20. My last answer covered that.

Ques. 21. Then you refuse to answer this question directly?

Counsel for Marsh objects to the question; same objection as above repeated.

Ans. 21. I neither refuse nor consent. I do not recognize the question nor will not.

Counsel for Nichols, Shepard & Co. states that he is simply exercising his rights in the cross-examination of any witness, as provided for in the rules of evidence. As the witness refuses to recognize his question, he is compelled to cease his cross-examination, and for this reason and for reasons before given, and also for the reasons that are apparent from these last few questions in cross-examination, he shall move the Hon. Commissioner of Patents to exclude the entire testimony given by this witness, both on the direct examination and in rebuttal.

MINARD LAFEVER.

Taken, subscribed, and sworn to before me this 11th day of May, 1882.

FRANK G. REYNOLDS,
Notary Public.

By consent of counsel an adjournment is hereby taken until seven o'clock p. m. May 11th, 1882, at the office of Frank G. Reynolds, in the city of Battle Creek, Michigan.

800 At the office of Frank G. Reynolds, in the city of Battle Creek, Michigan, May 11th, 1882, at seven o'clock p. m., counsel for respective parties to this suit appear, pursuant to adjournment had this p. m., and continue the taking of the testimony in rebuttal on behalf of E. A. Marsh as follows, to wit:

MICHAEL RAINBOW, a witness produced in rebuttal for and in behalf of E. A. Marsh, being duly sworn, does depose and say, in answer to interrogatories proposed to him by MARTIN METCALF, Esq., counsel for E. A. Marsh, as follows, to wit:

Counsel for Nichols, Shepard & Co. desires to state when he was cross-examining the last and other witnesses his examination was objected to for the reason of the limited time allowed to Marsh; that at the time the last witness refused to answer further questions in cross-examination. It was then four o'clock. At this time counsel for Marsh said he had no further witnesses at present and suggested an adjournment until after supper. Counsel for Nichols, Shepard & Co. said that as the time was so short that the examination better continue, and that he was ready and willing to do so or to adjourn; that it was thereupon agreed to adjourn until seven o'clock. At seven o'clock the attorney for Nichols, Shepard & Co. states he was present and ready to proceed, but found no witness, and was compelled to wait until this time, seven forty-five; and in view of the fact that all the witnesses named in the notice to him had been examined, he simply desired to show that he did not try to take any advantage, and gave the parties all the opportunity he possibly could do to get in any further testimony they might desire. Counsel for Nichols, Shepard & Co. desires to state that he would not have made this statement had it not been for the continued statement of the counsel for Marsh that he, said counsel for Nichols, Shepard & Co., was simply trying to take valuable time in cross-examination of witnesses without having any object in view.

Ques. 1. What is your name, age, residence, and occupation?

Ans. 1. Michael Rainbow; age, 58; residence, city of Battle Creek; occupation, blacksmith.

Ques. 2. Do you know the parties to this suit; and, if yea, how long have you known them?

Ans. 2. I do; about twenty-five years—that is, I know the firm of Nichols & Shepard's that long.

801 Ques. 3. Do you know anything about the invention in controversy; and, if yea, when did you first obtain a knowledge thereof?

Ans. 3. I do; I think about two years ago; it might be a little less.

Ques. 4. In what way did you obtain this knowledge? Please state.

Ans. 4. By seeing it attached to one of Mr. Nichols & Shepard's engines.

Ques. 5. Who did you see make the attachment you speak of?

Ans. 5. I did not see any one make it; I saw it on an engine.

Ques. 6. State, if you know, who made the stop plate, so called.

Counsel for Nichols, Shepard & Co. objects to the question as leading.

Ans. 6. I did; that is what they told me it was.

Ques. 7. By whose direction did you do this?

Ans. 7. Well, I made it by the order of Mr. Marsh, and Mr. Shepard told me to make it for him.

Ques. 8. In what manner did Mr. Marsh direct you to make this stop plate?

Ans. 8. He drew the form out with a piece of chalk.

Ques. 9. What did he make the draft on?

Ans. 9. On a piece of board.

Ques. 10. Can you give the month or day of the month or year? If so, please give it as nearly as you can.

Counsel for Nichols, Shepard & Co. objects to the question, for the reason that the witness has stated that he could not fix the exact date.

Ans. 10. It was in the fore part of September; I think it's two years ago.

Ques. 11. How long have you worked for Nichols, Shepard & Co.?

Ans. 11. I think it is five years last November.

Ques. 12. Was the time when you made this stop plate the time that Mr. Elon A. Marsh was engaged in the work of applying his reverse gear for steam-engines at the shops of Nichols, Shepard & Co. to one of their traction engines, and the only time he was so engaged, if you know?

Ans. 12. It was at the time he was applying. I don't know of any more.

Ques. 13. Did you see this plate fitted to the boiler? I don't mean now bolted onto the boiler, but fitted to it.

Ans. 13. I did; I fitted it on red hot.

Ques. 14. Who besides yourself was present, if you know?

Ans. 14. Mr. Marsh.

Ques. 15. Anybody else?

Ans. 15. I think not.

Ques. 16. What time in the day was this—in the forenoon or afternoon?

802 Ans. 16. I cannot say positively, but I think it was in the afternoon.

Ques. 17. Did Mr. Marsh bring a sheet-iron pattern to you for you

to work from in making this stop plate, or did you ever see or hear anything about a sheet-iron pattern for this purpose?

Ans. 17. He did not bring me no sheet-iron pattern. He got me a piece of iron and he stopped there while I made it; then I went and fitted it on the boiler red hot.

Ques. 18. Have you or not recently been questioned by Mr. Hoag or any other person in his behalf in reference to your knowledge of the making of this stop plate?

Ans. 18. Mr. Hoag asked me about it.

Ques. 19. Please state when and what he said, as near as you can.

Ans. 19. I think it was some time this winter he asked me if Mr. Marsh gave me a sheet-iron pattern. I answered No, he drew it with a piece of chalk.

Ques. 20. Please describe this stop plate, the size and shape of it, as nearly as you can, and where it was placed on the boiler.

Ans. 20. I think the iron was a piece of inch and a half wide by five inches thick; the piece that went on the boiler, to the best of my knowledge, was about three inches long; it projected out from the boiler about five-eighths or three-fourths of an inch, I couldn't say which, and then turned up again.

Ques. 21. Do you know the exact use of this stop plate, what purpose it serves?

Ans. 21. I asked Mr. Marsh at the time what it was for, and he showed me.

Ques. 22. Did he show you this after the plate was on and the engine in use, or otherwise?

Ans. 22. He showed me what it was, but there was no steam on the engine at the time.

Ques. 23. How long after it was put on was it that he showed you what its use was, and where was the engine then?

Counsel for Nichols, Shepard & Co. objects to the question as not warranted by the previous testimony of the witness.

Ans. 23. After he had got it put on the same time that it was made the engine stood on the premises of Nichols & Shepard.

Ques. 24. If I understood you, you did not see this stop plate bolted onto the boiler. I will now ask whether or not you saw any work done on the plate by any person other than what you have stated. I mean now did you see it drilled or any other fitting done to it?

Counsel for Nichols, Shepard & Co. objects to the question as leading.

Ans. 24. I seen it on the boiler; I seen Mr. Marsh and another man drilling it.

Counsel for Nichols, Shepard & Co. objects to the testimony of this witness for the reasons before given and as an attempt to get on the record direct testimony in behalf of Marsh not warranted by this preliminary statement, and without waiving said objection proceed to cross-examine.

Ques. 1. Were you present when this stop plate was being bolted to the boiler?

803 Counsel for Marsh objects to the question, not proper cross-examination, the witness having already stated that he was not present. The attention of the Hon. Commissioner of Patents is again called to this flagrant abuse of the privilege of cross-examination of witnesses—that with the evident purpose of confusing and embarrassing the witness by a misstatement of fact in the question propounded.

Ans. 1. I was not.

Ques. 2. What else besides forging the piece out did you do in regard to this stop?

Ans. 2. I would ask if this includes any other work that I have done for that same purpose.

Ques. 3. I simply refer to this particular stop that you say that you forged. Did you do anything else except to forge the plain piece of iron and bend it in shape to fit the boiler?

Counsel for Marsh objects to the question as misleading.

Ans. 3. I did.

Ques. 4. What else?

Ans. 4. I made a rod of inch round iron to connect that gear with the lever that went on behind. That was attached to the lever that worked that gear. I can't give you the name of it.

Ques. 5. I refer to that piece of iron you call the stop; not to any other part of the engine. I want to know whether you did any cutting, punching, or finishing on this piece except to simply forge it out.

Ans. 5. I did not; no cutting, only what was necessary for the forging of the stop, and I did not do no punching on it; it was drilled.

MICHAEL RAINBOW.

Taken, subscribed, and sworn to before me this 10th day of May, 1882.

FRANK G. REYNOLDS,
Notary Public.

Counsel for Marsh desires to state that had counsel for Nichols, Shepard & Co. adhered to the truth he would have had no word further to say; but, inasmuch as he has put on an air of great sanctity, as did Satan on the mount, promising everything when he had nothing on earth to give and showing through a very thin gauze his cloven foot the while, it remained to be seen how well or ill he will carry out the role of the wonderfully good and Christian Washington theologian, lawyer, and what not his trying to ape. The fact is by a most miserable, dirty trick he has deprived Marsh of one of his most valuable witnesses by denying Marsh the customary privilege of placing the said witness on the stand after the direct examination of Marsh and before his cross-examination to accommodate the said witness, who had waited a day and a half in Battle

Creek to give his testimony, but was then called away by a telegram, which he, the said lawyer, theologian, etc., well knew, because I had told him thereof, that he could not well disobey. Marsh had a subpœna for him, which he forebore to serve in consequence of the knowledge he had of the great loss to witness it would entail upon him, and therefore we lost that evidence. To-day Marsh was obliged to send ten miles into the country for the last witness, who is and has been for years in the employ of Nichols, Shepard & Co. and who was called thence to the death-bed, as he supposed, of his daughter, from which we had hoped not to call him, but as Mr. Rainbow did not return on yesterday, as was expected by his family, nor
804 up to noon to-day we sent for him, expecting every moment the return of Mr. Marsh with the witness up to a few moments before the adjournment of which this truly great and good and pious Christian gentleman and theologian of Washington complains because, he says, we had no more witnesses at present. I asked him to say no more witnesses present so as to convey the exact truth and nothing but the truth, but he insisted on sticking to the lie. Now, besides the above reasons given for loss of valuable time by the wanton waste of this good gentleman, I had several affidavits to prepare by way of answer to certain other flagrant wrongs suffered by Marsh in the taking and transmitting of his direct testimony, which I had hoped to complete in time for filing before the expiration of Marsh's set time, but through this waste thereof, already noted, it is now impossible for me to do that. However, notice is hereby given that said affidavits will be forthcoming in due season, and the opposing parties in this suit will take this timely notice thereof and govern themselves accordingly.

In the matter of the interference between the application of Elon A. Marsh for an improvement in reversing gear for steam-engines and the patent (reissue) of Andrew J. Hoag, assignor to Nichols, Shepard & Co., granted November 29, 1881, numbered 9951, now pending before the Commissioner of Patents.

SIR: You are hereby notified that on Monday, the 8th day of May, 1882, at nine o'clock a. m., before Frank G. Reynolds, Esq., room 7, Upton block, Battle Creek, Calhoun Co., Mich., I shall proceed to take the testimony of Elon A. Marsh, Minard Lafever, Martin E. Brown, Eli Flagg, Edward Newman, and others in my behalf.

The examination will continue from day to day until completed. You are invited to attend and cross-examine.

Washington, D. C., May 1st, 1882.

ELON A. MARSH,
By C. M. ALEXANDER,
Of Counsel for Marsh.

To A. M. Smith, Esq., attorney for Hoag.

Service acknowledged this 1st day of May, 1882.

A. M. SMITH,
Att'y for A. J. Hoag, Assignor, etc.

805 STATE OF MICHIGAN, } ss:
County of Calhoun, }

I, Frank G. Reynolds, a notary public within and for the county of Calhoun and State of Michigan, do hereby certify that the foregoing depositions of Elon A. Marsh, John M. Henry, Eli W. Flagg, Martin E. Brown, Edward S. Newman, Minard Lafever, and Michael Rainbow were taken in rebuttal on behalf of Elon A. Marsh, in pursuance to the notice hereto annexed, before me, at my office, in the city of Battle Creek, in said county, on the 8th, 9th, 10th, and 11th days of May, A. D. 1882; that each of said witnesses was by me duly sworn before the commencement of his testimony; that the testimony of each of said witnesses was written out by myself; that the opposing party, Nichols, Shepard & Co., by Alex. Mahon, Esq., of counsel and attorney for Nichols, Shepard & Co., assignee of A. J. Hoag, &c., was present, and Edwin C. Nichols and David Shepard, members of the firm of Nichols, Shepard & Co., were also present during the taking said testimony; that said testimony was taken at my office, in the city of Battle Creek, Michigan, and was commenced at nine o'clock a. m. on the 8th day of May, 1882, and was continued pursuant to adjournment on the 8th, 9th, 10th, and was concluded on the 11th day of said month of May, 1882; that I am not connected by blood or marriage with either of said parties nor interested, directly or indirectly, in the matter in controversy.

In testimony whereof I have hereunto set my hand, at the city of Battle Creek, in said county and State, this thirteenth day of May, A. D. 1882. I have no seal of office to affix hereto.

FRANK G. REYNOLDS,
Notary Public within and for Calhoun County, Michigan.

806 Before the Commissioner of Patents.

In the matter of the interference between the application of Elon A. Marsh for a patent for improvement in reversing gear for steam-engines and reissued letters patent No. 9951, granted November 29th, 1881, to A. J. Hoag, assignor to Nichols, Shepard, & Co., now pending before the Commissioner of Patents.

Testimony in Surrebuttal in Behalf of A. J. Hoag, Assignor to Nichols, Shepard & Co.

A. M. Smith, attorney for Nichols, Shepard & Co., assignees of A. J. Hoag; Alex. Mahon, Warren C. Stone, of counsel.

807 Before the Commissioner of Patents.

In the matter of the interference between the application of Elon A. Marsh, filed September 28th, 1881, and the reissued letters patent granted to Nichols, Shepard & Co., assignees of A. J. Hoag, November 29th, 1881, No. 9951, for improvements in reversing gear for steam engines.

Depositions of witnesses examined on behalf of Nichols, Shepard & Co., assignees of A. J. Hoag, taken before me, Eugene M. Converse, a notary public in and for the county of Calhoun, State of Michigan, at the office of Nichols, Shepard & Co., in the city of Battle Creek, Michigan, pursuant to the annexed notice, on Tuesday, the 8th day of May, A. D. 1883.

Present: Alex. Mahon, Esq., on behalf of Nichols, Shepard & Co., assignees of A. J. Hoag, and R. A. Parker, Esq., and Martin Metcalf, Esq., on behalf of Elon A. Marsh.

David Shepard.

DAVID SHEPARD, produced as a witness and being duly sworn, does depose and say, in answer to interrogatories proposed to him by ALEX. MAHON, Esq., counsel for Nichols, Shepard & Co., assignees of A. J. Hoag, as follows, to wit:

Question 1. What is your name, age, residence, and occupation?

Answer. David Shepard; age, sixty-two years; residence, Battle Creek, Michigan. I have no occupation at present.

Q. 2. You are a stockholder of the firm of Nichols, Shepard & Co., are you not?

808 A. Yes, sir; I am.

Q. 3. What was your principal business in the summer and fall of 1880 with that concern, if any?

A. I have no particular business with the concern except such as grows out of the association in any former business and my financial interests in the company.

Q. 4. Do you or not make a habit of visiting the concern, the works, or have you every day for the time of your connection with them?

A. Since I have ceased active duties with the concern I have been in the habit of visiting the shops once or twice most of the time. Once or twice a day, I should have said.

Q. 5. You are advised with on any new point or device to be used or applied to any of the machinery manufactured by the concern or by the company and generally keep fully posted, do you not, of all improvements made by them?

(Counsel for Marsh objects to the question as leading, irrelevant, and immaterial.)

A. I am usually consulted in regard to changes or contemplated improvements in articles manufactured.

Q. 6. Were you present at the works of Nichols, Shepard & Co. during the first part of September, 1880, or during the time of an

attempt by Elon A. Marsh to apply to one of the traction engines of Nichols, Shepard & Co. an alleged invention of his for reversing gear for engines?

A. I was present at the shop in the fall of 1880, at the time Mr. Marsh was building and trying the so-called reverse gear.

Q. 7. Did you pay any particular attention or not to how he was succeeding with the device or its application?

(Counsel for Marsh objects to the question as leading.)

A. I did pay particular attention to it, and felt a lively interest in it.

Q. 8. Do you remember or not whether the device as first applied by him was considered a failure or a success, either by himself or by the members of the company or the managers thereof?

809 (Counsel for Marsh objects to the question as alternative and not proper surrebutting.)

A. I considered the device a failure. Mr. Marsh told me it was a failure, and all others that I heard speak of it expressed the same opinion.

(Counsel for Marsh gives notice that he will move to strike out the above answer as not responsive and not surrebuttal.)

Q. 9. Was this device afterwards or any improvements of it applied successfully to one of Nichols, Shepard & Co.'s traction engines?

(Counsel for Marsh objects to the question as not surrebuttal and leading.)

A. The reversing gear, with additions which had been added to it since that time, has been used successfully.

(Counsel for Marsh moves to strike out the above answer as not surrebutting.)

Q. 10. Can you fix the day when Mr. Marsh first applied or completed an engine embodying a gear or reversing device of his alleged invention?

A. I cannot fix any day definitely.

Q. 11. After applying the device to an engine, and after firing up, going through the usual preliminaries to start an engine, did the engine work properly or not?

(Counsel for Marsh objects to the question as not surrebutting.)

A. The engine did not work with the traction gearing applied.

(Counsel for Marsh moves to strike out the answer as not responsive and not surrebuttal.)

Q. 12. Did Mr. Marsh at that time consult with you or not in regard [to] the device?

(Counsel for Marsh objects to question as not surrebuttal and immaterial.)

A. He did.

Q. 13. What did he say in regard [to] the matter, and
810 what was the cause or reasons of his consulting with you about it?

(Counsel for Marsh objects to the question as not surrebuttal.)

A. In one consultation I had with him on the 1st day of the trial, amongst other things—I couldn't repeat except in substance—he said he thought the reach rod was too light, and by using a heavier reach rod he could probably make it work, and asked me to assist him in getting the material for the heavier rod; that is all.

[On the margin: C. Q. 17. 2–3 p. m. S. already knew of plan to put stops on from Hoag. C. Q. 43.]

Q. 14. Did he apply a heavier rod afterwards to the device?

(Counsel for Marsh objects to the question as not surrebuttal.)

A. He did.

Q. 15. Did the device work satisfactorily then?

(Counsel for Marsh objects to question as not sur-rebuttal.)

A. It did not.

Q. 16. When did it first work successfully and what was the cause of its successful working?

(Counsel for Marsh objects to the question as not surrebuttal.)

A. I cannot answer from my own personal knowledge. I did not see the engine when it was first fired up after the application of the stops, as the engine was tried and run in the paint shop in the morning before I arrived at the works.

Q. 17. Did you have any consultation with Mr. Marsh the preceding evening in regard to the device or not?

(Counsel for Marsh objects to question as not surrebuttal.)

A. I did; the preceding day.

Q. 18. What was said by Mr. Marsh the preceding day in regard to the device? And state the cause of the conversation or discussion on the preceding day in regard [to] the device.

811 (Counsel for Marsh objects to question as not surrebuttal.)

A. On the preceding day—do you mean the second day or the first day?

Q. 19. I mean the day it was first successfully applied.

A. I didn't see him on the day it was first successfully applied.

Q. 20. Did Mr. Marsh have any conversation with you at all in regard to the successful application of the device? And, if yea, state the nature of such conversation.

A. On the second—

[On the margin: This would be the day the stop plate was applied. (See Q. 23.) This was 1–2 p. m. (C. Q. 23.)]

—day after the first trial of the engine I had a conversation with Mr. Marsh, in which, after the discussion of the failure of the engine

and the various causes of the failure, the inadequacy of the parts, he said that we wasn't beat yet; that Jack had got up a device which he thought would work successfully.

(Counsel for Marsh moves to strike out answer as not surrebutting and immaterial and incompetent, and if intended as impeaching no proper foundation has been laid for the same.)

Q. 21. Who did he mean by Jack?

(Counsel for Marsh objects to the question that the understanding of the witness cannot be taken, only the language can be given, and as incompetent.)

A. Mr. Hoag, Jack being the name by which he is generally known amongst the shop men.

(Counsel for Marsh moves to strike out the answer on same ground as he moves to strike out the question.)

Q. 22. What did the device consist of, if you know, that Mr. Marsh said Mr. Hoag had applied so as to make the device work successfully?

(Counsel for Marsh objects to the question on the ground that there is no evidence that Mr. Marsh ever made such a statement to this witness or anybody else, and that it is not surrebutting.)

A. He said it consisted of some stops fastened onto the
812 boiler, under the crank shaft of the engine, against which the projecting arm of the sleeve to which the reach rod was attached would come in contact in order to take the strain off from the reach rod.

Q. 23. You will swear positively that Mr. Marsh told you that Jack or Mr. Hoag had applied this device to the engine?

(Counsel for Marsh objects to the question as not surrebuttal.)

A. I could not. The device was not then applied to the engine.

Q. 24. He said Jack was about to apply the device. Is that what you mean?

(Counsel for Marsh objects to question as leading and not warranted by the previous answers of the witness and not surrebuttal.)

A. Mr. Marsh simply said Jack had got up a device. By that I understood that Jack had explained the manner in which he proposed to overcome the difficulty and was then about applying it to the engine.

(Counsel for Marsh moves to strike out what the witness says he understood as not being proper testimony.)

Q. 25. Was the device afterwards applied to the engine or not?

(Counsel for Marsh objects to the question as not being surrebuttal and immaterial.)

A. It was.

Q. 26. Did you ever hear it questioned by anybody at that time

that Mr. Hoag was the one who applied the device and who was the inventor of it?

(Counsel for Marsh objects to the question as immaterial and not surrebuttal.)

A. I did not.

Q. 27. And it was always acknowledged by everybody, as you understood it, that Mr. Hoag was the one who applied this stop plate, and he was the inventor of it?

(Counsel for Marsh objects to the question as incompetent, immaterial, and as not surrebuttal.)

813 A. I never heard it questioned until after the commencement of taking testimony in this case.

Q. 28. Do you know whether the company has ever employed a workman by the name of George A. Stillman?

(Counsel for Marsh objects to question as not surrebutting.)

A. They have.

Q. 29. When was he employed by the company?

(Counsel for Marsh objects to question as not surrebutting.)

A. He was in the employment of the company when the company was organized as a company and up to last winter; I think in the month of January.

Q. 30. State the cause, if you know, why he was not employed after that time by the company.

(Same objection as last above by counsel for Marsh.)

A. He was in our employ up to the time of his death, which occurred at that time.

Q. 31. When was the firm of Nichols, Shepard & Co. made an incorporated company?

A. I think it was either the year 1868 or 1869.

(By consent, an adjournment taken until 2 o'clock p. m., May 8th, 1883.

E. M. CONVERSE,
Notary Public.)

MAY 8TH, 1883, at 2 o'clock p. m.

Pursuant to adjournment, taking of depositions resumed. Counsel for respective parties present.

Q. 32. Did you ever have any conversation with Mr. Hoag in relation to this device at the time that Mr. Marsh was applying his alleged improvements to valve gear to your engine?

(Counsel for Marsh objects to question as incompetent, irrelevant, and not surrebuttal, and Mr. Hoag's statements cannot be taken in his own favor.)

814 A. I did; at the time of the first trial Mr. Hoag came to me and told me he had a scheme or device.

[On the margin : Contradicts Hoag. See Hoag, direct.]

I couldn't give you the exact language—that is the purport—by which he thought he could make it work, and explained it to me as good as he could by word of mouth, and asked me if he hadn't better go to work and put it on at that time. I told him to wait and give Mr. Marsh every facility he could, and when he got through and if he failed to make it work successfully then he might try.

[On the margin : See Hoag giving Marsh sheet iron, p. —. Two theories : 1, Hoag's; 2, Shepard's; both can't be true. See also C. Q. 5.]

Afterwards—during a conversation after that—after trying a heavier reach rod he told me Mr. Marsh had got through—abandoned it—and, as he supposed, he had gone home.

[On the margin : See C. Q. 40, 2 p. m., after Hoag says he commenced to put it on.]

I told him to go on and try his scheme. I guess that is all.

Q. 33. Are you familiar with a device or stop plate as described and claimed in the patent granted to Nichols, Shepard & Co., assignees of Andrew J. Hoag, No. 9951?

A. I don't know that I am, without I could refer to the cut of the plate.

Q. 34. Was the device, as applied by Mr. Hoag at that time, and which you say made the alleged device of Mr. Marsh a success, the same as you understood was applied for by Mr. Hoag for a patent, and was afterwards issued to you as his assignee?

A. The same in principle, but different in construction.

DAVID SHEPARD,

Subscribed and sworn to before me this 8th day of May, A. D. 1883.

EUGENE M. CONVERSE,

[SEAL.] *Notary Public.*

(Counsel for Marsh requests the witness to sign his deposition on direct examination, after which the counsel for Marsh proceeds and insists to a cross-examination of the witness, to which counsel for Nichols, Shepard & Co. objects.)

815 Mr. Parker, counsel for Mr. Marsh, states that after the direct examination was taken he suggested that the testimony be read over to the witness and signed by him, and that when a cross-examination was had the same be read over to the witness and signed by him, as the proper practice under the circumstances, thereby saving a mangling of the record by corrections made after the whole testimony was taken; to which course counsel for Nichols, Shepard & Co., assignees of Hoag, expressed no dissent or objection until after the reading and signing of witnesses' direct testimony and counsel for Marsh had proceeded to cross-examine, and he requests the commissioner to certify as to the truth of the above statement.

I hereby certify that at the time counsel for Nichols, Shepard &

Co. announced the direct examination of witness, David Shepard, closed, Mr. Parker, counsel for Marsh, asked that the direct deposition of witness be read over to him, and that he sign the same before commencing the cross-examination; that counsel for Nichols, Shepard & Co. made no objection to that course being taken. The reasons stated for so doing by Mr. Parker were substantially as by him above stated. The testimony of witness was read by me to him and the same signed by witness; that Mr. Parker then began to make a statement about not waiving objections, when counsel for Nichols, Shepard & Co. entered the objection as appears on the record above.

[SEAL.] E. M. CONVERSE,
Notary Public.

Counsel for Nichols, Shepard & Co. states that he turned the witness over to counsel for Marsh for cross-examination, and, being then under the control of said counsel, that he, counsel for Nichols, Shepard & Co., had no right to object until the act of signing by the witness had been done; that while counsel for Nichols, Shepard
816 & Co. is entirely willing that all of his witnesses shall be cross-examined to the fullest extent, he is not willing, nor does he propose, as has been attempted in this case, as will appear from the entire record, to be run by counsel for Marsh, and that he simply objects at the proper time, as he considers, and not before the objectionable thing or question is asked.

Counsel for Marsh, without waiving any of the objections heretofore made or the right to move to strike out based thereon, proceeds to cross-examine the witnesses.

Cross-Q. 1. I suppose, Mr. Shepard, you were present most of the time during the taking of the testimony of both sides of the case, were you not?

A. I was.

Cross-Q. 2. You heard the most of it, then?

A. Yes, sir.

Cross-Q. 3. Do you recollect hearing Mr. Marsh's testimony?

A. I heard the most of Mr. Marsh's testimony, and I wish to say right here that my hearing is quite imperfect, and I missed a great many words.

Cross-Q. 4. Did you hear Mr. Hoag's testimony?

A. I did.

Cross-Q. 5. You speak in your direct examination about the time of the first trial of the engine with the Marsh reversed gear attached, and you speak about a second trial of the same. Were those trials upon the same day or upon different days; and, if so, will you explain their relation to each other in point of time? You will explain first what you mean by a trial, and then their relation in point of time.

A. What I mean by the trial was the attempt to move the engine with the traction applied. In regard to the two trials, to the best of my recollection, they were on two days—two consecutive days.

Cross-Q. 6. What time of the day was the first trial?

A. I think I saw them trying to move the engine about ten
817 o'clock in the morning and at half past one or two in the afternoon. I was not present all the time at which the trial was being made.

Cross-Q. 7. The trial on that day—in other words, the first trial—includes the working the engine that day with the slim reach rod, does it not? That is as I understand you.

(Counsel for Nichols, Shepard & Co. objects to the question, as witness has not stated that the engine did work with the slim reach rod.)

A. Yes, sir.

Cross-Q. 8. And the second trial, so called, or attempted working of the engine, includes all the trials on the next day with the stiffer reach rod. Am I correct?

A. Yes, sir.

Cross-Q. 9. Do you know how many days altogether Marsh was to work on that engine, including the trials—*i. e.*, from the time it was commenced till it was finished?

A. I do not know. He was several days getting the different parts ready to attach to the engine.

Cross-Q. 10. When did you have the first conversation with Marsh in reference to his reverse gear?

A. You mean by that the conversations to which we alluded?

Cross-Q. 11. Question repeated.

(Counsel for Nichols, Shepard & Co. objects to the question as not being proper cross-examination.)

A. The first conversation I had with Mr. Marsh was in the spring, probably in March, in 1880.

Cross-Q. 12. Did you have frequent or occasional conversations with him about the matter after that up to the time he came to the works to put on this gear?

A. I don't recollect any conversations between that time and the time he came here to the works to put it on the engine. Possibly we might have had other conversations, but don't recollect about them.

Cross-Q. 13. Do you recollect where the first conversation was? If so, state.

A. The first conversation was either at the foot of the stairs
818 or in the stairway, down in the city, leading up in the room where he was exhibiting what has since been called the Moon engine, with the reversing device attached. I went up with him and he showed the device to me. I went up for that purpose.

Cross-Q. 14. After he came to Nichols, Shepard & Co.'s shop to put the reversing gear on the engine on the occasion referred to, when and where did you have the first conversation with him about the matter?

(Counsel for Nichols, Shepard & Co. objects to the question and also to the preceding question as not proper cross-examination and as entirely irrelevant.)

A. I don't think we had anything that could be considered a conversation until the first day of the trial of the engine, except in passing through the shops I might have exchanged a word with him. Both of the conversations to which I refer occurred in the office of Nichols, Shepard & Co.

Cross-Q. 15. That is in a building that is disconnected from the rest of the works, is it not? And about how far from the place of trial?

A. Yes, sir; some eight or ten rods.

Cross Q. 16. Referring to the first conversation, on the day of the first trial, what time of the day was it?

A. I think in the afternoon. I think somewhere from two to three o'clock.

Cross-Q. 17. How came he to talk with you about it?

A. I have the impression that he was in search of a piece of iron or a piece of steel, which he asked if we had, larger and stiffer, to replace the reach rod that he was then using.

[On margin: Contradicts Hoag, who says Marsh asked him.]

Cross-Q. 18. During that forenoon and forepart of the day do you know how constantly Mr. Marsh had been at the engine upon which this gear had been placed?

A. I went to look at the engine two or three times while they were trying to operate it. I think Mr. Marsh was there at each time. I do not know that he was there constantly.

Cross-Q. 19. When you saw the engine on these occasions, when you visited it, was it fired up?

819 A. It was.

Cross-Q. 20. Did you notice how much steam it had on; if so, will you state?

A. On one occasion, I recollect, I noticed the gauge indicated 85 lbs.

Cross-Q. 21. How long did you remain at the engine on these occasions when you visited it, as near as you can state?

A. I think from three to ten minutes.

Cross-Q. 22. You had no conversation with him on those occasions especially?

A. I think not.

Cross-Q. 23. You had a conversation with him in the office the next day; about what time in the day?

A. I think, about half past one or two o'clock.

Cross-Q. 24. Did you have more than one conversation with him that day, the second day?

A. I think not.

Cross-Q. 25. Had you run the engine that day before this conversation?

A. Yes, sir.

Cross-Q. 26. How many times?

A. I don't recollect only one.

Cross-Q. 27. About how long were you observing it?

A. But a very short time; probably five minutes.

Cross-Q. 28. What time was that in the day?

A. Not far from nine o'clock.

[On the margin: Contradicts Hoag, Bradly, & Nichols, who said it wouldn't move.]

Cross-Q. 29. Did you see it that day after the conversation you referred to?

A. I did.

Cross-Q. 30. Where was it then?

A. It was near the position it had been all the time that they were trying to operate it.

Cross-Q. 31. How long were you observing it that day after the conversation with Marsh?

A. From three to five minutes.

820 Cross-Q. 32. Do you know whether he had then put on a larger reach rod or not?

A. He had.

Cross-Q. 33. Was the larger reach rod on in the morning when you saw it that day?

A. It was.

Cross-Q. 34. Do you know when the stop, so called, that has been referred to, was placed on the engine?

A. I do not know for a certainty.

Cross-Q. 35. When did you first learn that it had been placed on the engine?

A. That evening, just before going home. About five o'clock I saw a man at work at it, but didn't see the stop.

Cross-Q. 36. How did you then know that it was the stop referred to?

A. From conversations had with Mr. Hoag and others and seeing men punching holes in the boiler where the stop was to be placed.

Cross-Q. 37. You say conversations with Hoag and others. Who were the others?

A. I really can't recall. Charles Nelson, I recollect, was one.

Cross-Q. 38. Where were the conversations?

A. The conversation I had with him was at the time which I visited the engine, when they were putting on the stop.

Cross-Q. 39. And where and when was the conversation with Hoag?

A. One conversation was in the office, when I advised him to go to work and put it on, and another time when I visited the engine.

Cross-Q. 40. What time in the day was the first conversation with Hoag in the office?

A. It was very soon after noon. I should think not later than two o'clock.

821 Cross-Q. 41. This was the occasion when he suggested the use of the stop, was it?

A. It was the occasion when I advised him to put it on. He had suggested the use of the stop before.

Cross-Q. 42. When had he suggested the use of it?

A. On the day before.

Cross-Q. 43. At what time in the day?

A. Probably at half past one or two; I couldn't be definite.

[On the margin: Then Marsh talked with Shepard.—C. Q. One hour later, after I had notice of Hoag's plan.—C. Q. 17.]

Cross-Q. 44. Will you state the particular description which Hoag gave of the device which he proposed to use to remedy the defects due to the springing or buckling of the reach rod?

A. He proposed to put some stops on the boiler. I suggested to him that it would be difficult to plane the stops with sufficient delicacy to get the valve in the right position.

[On the margin: Don't know anything about it.—See C. I. 49.]

He said he would overcome that trouble by using set-screws.

Cross-Q. 45. Did he describe to you the particular form of the stop and how it was to operate in connection with the arm carrying the reverse gear?

A. I don't think he described the form of the stop at all. Simply when the engine was running the arm would rest on one or the other of the stops, according to which way the engine was running, and by so doing would put the strain upon the arm of the reversing gear or sleeve, which would otherwise be thrown upon the reach rod.

Cross-Q. 46. I believe you have been trained as a mechanic, have you not, Mr. Shepard?

A. I never served an apprenticeship at any trade. In my business I have picked up some ideas of mechanism, but consider myself very far from being an expert.

Cross-Q. 47. How long have you had experience in mechanical matters?

A. Since the year 1849.

Cross-Q. 48. Are you quite familiar with the mechanism and operation of steam-engines?

822 (Counsel for Nichols, Shepard & Co. objects to question and previous questions as not being proper cross-examination, and, further, witness not being put on to testify as an expert, and gives notice that he will move to exclude the cross-examination for this reason and reasons before given.)

A. I have had some experience for about 25 or 30 years, but but little until the last four or five years or five or six years. I have a very good general knowledge of engines.

Cross-Q. 49. Had you closely and critically examined the Marsh reverse gear previous and up to the time it was placed upon one of Nichols, Shepard & Co.'s engines by Marsh at the time by you testified, at the time of their trials, so that you can say that you then understood its principles and mode of operation?

(Counsel for Nichols, Shepard & Co. objects to the question for the reasons before given to previous question.)

A. I had not. I had simply given it a casual examination when exhibited to me on the so-called Moon engine. I had given it but very little attention or thought.

Cross-Q. 50. Do you know whether Mr. Hoag mentioned more than one set-screw or not when he described this?

A. I think he did.

Cross-Q. 51. When did you first become acquainted, if at all, particularly with the principles and mode of operation of the Marsh reverse gear?

(Counsel for Nichols, Shepard & Co. objects to the question as not proper cross-examination.)

A. I saw it, at the time I before referred to, exhibited on the Moon engine, and understood its general features, but was not particularly acquainted with its workings until after we commenced building them, and am only particularly acquainted now with its general features and the result of its operation.

Cross-Q. 52. At the time that Marsh showed you the Moon engine was there anything said about applying it to traction engines and about the changes in form necessary to adapt it to such engines; and, if so, what?

823 (Counsel for Nichols, Shepard & Co. objects to question as not proper cross-examination.)

A. There were remarks made in the room, I don't know by whom, that it would be a good thing to apply to a traction engine. I heard no suggestions of any changes, nor of the manner of its application.

Cross-Q. 53. You are vice-president of the company of Nichols, Shepard & Co., are you not?

A. I am; yes, sir.

The taking of further depositions adjourned by consent of counsel to May 9, 1883, at 9 o'clock a. m., at the office of Nichols, Shepard & Co.

EUGENE M. CONVERSE,
Notary Public.

At the office of Nichols, Shepard & Co., May 9th, 1883, at 9 o'clock a. m., the taking of depositions resumed.

Present: Counsel for respective parties.

Redirect examination of witness, DAVID SHEPARD, by ALEX. MAHON, Esq., counsel for Nichols, Shepard & Co.:

Redirect Q. 1. In answer to cross-questions 35 and 36 you state that you saw a man at work at the boiler on which this device was being applied, and also as to seeing men punching holes in the boiler. Please state who these party or parties were.

A. Mr. Charles Nelson was on the boiler, apparently punching a hole through the boiler, very close to and nearly under the line shaft, or crank shaft, more properly. About the time I arrived at

the engine Mr. Hoag came from the shop with a tap and wrench, and also a socket wrench which fitted onto the head of the tap to increase its length, so that they could turn the wrench above the crank-shaft.

(Counsel for Marsh moves to strike out the answer as not being responsive.)

Q. 2. Did you see any one else at the boiler while these holes were being punched, with the exception of Mr. Nelson and Mr. Hoag?

824 A. I saw no one else directly at the engine. There were other men about the yard.

Q. 3. You having a certain financial interest in the present interference case through your connection with Nichols, Shepard & Co., how was it that you did not offer or give testimony, in the taking of testimony in chief, on behalf of Hoag?

(Counsel for Marsh objects to the question as not being proper redirect and not surrebutting, and as affording no excuse for delay in the taking of witness' testimony, which should have been taken on Hoag's behalf as a part of his original case.)

A. It had not occurred to me that the testimony was necessary, nor that the question that Mr. Hoag was the inventor of the stop would be brought in question, as Mr. Marsh had before admitted to me that Mr. Hoag was the inventor; and although I was present at Mr. Marsh's examination-in-chief most of the time, I did not hear or understand that he at that time set up a claim that he was the inventor, but understood that he based his entire claim to the invention upon the device as applied to the Moon engine, and upon certain drafts claimed to have been exhibited to other individuals; that I never for a moment supposed that he laid any claim to the invention of the stop until I heard his rebuttal as taken before Notary Reynolds.

Recross-examination of witness, DAVID SHEPARD, by Mr. PARKER, counsel for Marsh:

Recross Q. 1. What time of the day was it when Nelson was on the boiler punching the hole in it?

A. As near as I could judge, it was about five o'clock in the afternoon.

Q. 2. Did you see the hole?

A. I did not.

Q. 3. Did you see Mr. Hoag do anything to it?

A. I did not.

Q. 4. I suppose this tap was for the purpose of cutting a screw-thread in the hole in the boiler, was it not?

825 A. It was.

Q. 5. If you did not see the hole that Nelson was apparently making, how can you say it was nearly under the crank-shaft?

A. From the motions and language of Mr. Nelson, who was punching the hole.

(Counsel for Marsh objects to all knowledge based on the language of Mr. Nelson as hearsay.)

Q. 6. Judging from the motions, about how far from either side of a perpendicular line through the center of the crank-shaft was he punching the hole?

A. Two inches.

Q. 7. On which side of that line?

A. The hole I saw him punching was on the side of the crank-shaft towards the smoke-stack.

[On the margin: Contrary to what it actually was.]

Q. 8. About how far from the smoke-stack was the crank-shaft?

A. I should judge about eighteen or twenty inches.

Q. 9. Did you see him at work at more than one hole?

A. I don't think I did; I was there but a short time.

[On the margin: Afterward they put on an arm when the engine — such a position.]

Q. 10. The cylinder of the engine was on the opposite side of the crank-shaft from the smoke-stack, I suppose?

A. It was.

Q. 11. Did you afterwards take notice how the so-called stop was bolted to the boiler?

A. I did not.

Q. 12. Do you know whether it was bolted at right angles to the axis of the boiler or parallel with it?

(Counsel for Nichols, Shepard & Co. objects to the question, as witness has stated that he had not taken particular notice as to how the stop was bolted on the boiler.)

A. I do not.

Q. 13. About how far from the crank-shaft and below it, in a perpendicular line, was Nelson apparently making the hole—that is, the distance down the drop?

A. About six or seven inches.

826 Q. 14. About how long were you there on that particular occasion? I have forgotten whether you stated or not.

A. I think about five minutes.

Q. 15. After this interference was declared did you not understand that the issue (between Marsh and Hoag) was as to the invention of the stop?

A. I understood that Mr. Marsh claimed the invention of a stop, which he claimed to have applied to the Moon engine, claiming that it accomplished the same purpose as the stop invented by Mr. Hoag.

Q. 16. Did you not understand that the invention claimed by Mr. Marsh and put into interference was the same in principle of construction and mode of operation, and that he claimed the same combinations that were claimed by Mr. Hoag?

(Counsel for Nichols, Shepard & Co. objects to the question as not proper cross-examination.)

A. I did not so understand. I did not understand the principle of any device that he had claimed to have applied to the Moon engine.

Q. 17. Then, if you did not understand the principle of the device as applied to the Moon engine, how can you say that you were misled as to the issue formed in the interference?

A. I understood the interference to be upon the Hoag stop, and did not understand that Mr. Marsh laid any claim to that device.

Q. 18. Did you not understand that he made claim to the principles of construction as distinguished from the form, the mode of operation, and the combination involved in the so-called Hoag stop?

A. I understood that he claimed to have a stop on the Moon engine, the form of construction or principle of which I have no knowledge.

(Counsel for Marsh objects to the answer and moves to strike it out as not responsive, and witness required to answer the question "yea" or "nay.")

827 Q. 19. Question above repeated.

A. Yes; but I wish to explain, and in explanation I wish to refer to my former answer to this question.

Q. 20. Have not the officials of Nichols, Shepard & Co., since this interference was declared, frequently discussed with you and in your hearing the issue involved herein?

A. The justice and probability of winning the case, yes. As to my knowledge of the case and its mechanical merits, no; not until after the rebuttal of Mr. Marsh before referred to.

Q. 21. Have you not conversed with the parties or counsel as to the issue before the rebuttal of Mr. Marsh was taken?

A. Please explain to me what you mean by the word "issue."

Q. 22. By the word "issue" I mean the question as to whether or not Marsh or Hoag were the first inventors of the invention in controversy.

A. I have never had any conversation with any one or any intimation from any one that Mr. Marsh was the inventor of the stop as we used it or claimed to be its inventor until the rebuttal testimony, before referred to, before Notary Reynolds.

(Counsel for Marsh objects to the answer, and moves to strike it out on the ground that it is not responsive and is evasive.)

Q. 23. This admission you refer to, you say Marsh made, is, I suppose, the one referred to by you in your testimony yesterday in the conversation in which you say Marsh said, "We are not beat yet," &c.?

(Counsel for Nichols, Shepard & Co. objects to the question as misleading.)

(After the question was asked Mr. Parker explained to witness

that he refers to his, witness', answer No. 20 of the direct examination.)

A. Yes, sir.

Q. 24. This was a casual conversation at that time, was it not, with Mr. Marsh?

A. It was.

828 Q. 25. There was no particular idea at that time of any controversy, was there, arising about this stop plate?

A. I had no such idea; don't know whether Mr. Marsh did or not.

[On the margin: Of no force as to admission thus Jack had got up a device.]

Q. 26. I suppose the idea that impressed itself more particularly upon your mind was that the defects mentioned had been remedied in that particular manner?

A. That was the only idea I entertained.

Q. 27. What time was it in the day that this conversation with Marsh took place?

A. This conversation, I think, took place very soon after I returned from dinner; probably at half past one, as near as I could get it.

Q. 28. Did he say anything about Hoag being then engaged in putting on the stop?

A. I don't think he did. I don't recollect any such remark.

Q. 29. Or was going to put one on?

A. I couldn't say whether he said anything as to whether he was going to put one on or not. He left the impression on my mind that he understood that Mr. Hoag was about to put it on.

Q. 30. You have given us your general impression of the conversation as you then understood it, have you?

A. Yes, sir.

Q. 31. You don't undertake to repeat the exact language, do you?

A. No, sir.

Redirect examination of witness, DAVID SHEPARD, by ALEX. MAHON, Esq., counsel for Nichols, Shepard & Co.:

Question 1. You state in answer to recross-question No. 22 that you never heard it intimated that Mr. Marsh "was the inventor of the stop as we used it." You mean, do you not, that you never heard it claimed by Mr. Marsh or any one else on his behalf

829 that he had applied the stop plate to the engine in the early part of September, 1880, when you say you saw Mr. Hoag and Mr. Nelson preparing to apply the device?

(Counsel for Marsh objects to the question as not proper redirect for the reason that the answer referred to was not responsive, and, further, that it is leading.)

A. I had never heard it intimated by any one.

DAVID SHEPARD.

Subscribed and sworn to before me this 9th day of May, A. D. 1883.

EUGENE M. CONVERSE,

[SEAL.] *Notary Public.*

Wallace W. Stilson.

WALLACE W. STILSON, produced as a witness and being duly sworn, deposes and says, in answer to interrogatories proposed to him by ALEX. MAHON, Esq., counsel for Nichols, Shepard & Co., as follows, to wit:

Direct Question 1. What is your name, age, residence, and occupation?

Answer. Wallace W. Stilson; forty-two years old; occupation, a painter; residence, No. 6 Elm street, Battle Creek, Michigan.

Q. 2. Were you present at the works of Nichols, Shepard & Co. during the application of a reversing gear to one of their traction engines during the fall of 1880?

A. Yes, sir.

Q. 3. Who did you see working on that device?

(Counsel for Marsh objects to question as not being surrebuttal.)

A. A. J. Hoag and Charlie Nelson.

Q. 4. Did you do any work of any kind on that engine?

(Counsel for Marsh objects to question as not surrebutting.)

A. I did.

830 Q. 5. What was the nature of the work that you did?

(Counsel for Marsh objects to the question as not surrebutting.)

A. I painted the engine.

Q. 6. Do you know the nature of the work done on that engine by Mr. Hoag and Charlie Nelson?

(Counsel for Marsh objects to question as not surrebuttal.)

A. Yes, sir.

Q. 7. State what it was.

(Counsel for Marsh objects same as last above.)

A. I saw them putting the stop on. I also saw them punch the holes in the boiler for the stop; saw them do that first.

Q. 8. Why was your particular attention called to this machinery work being done by Mr. Hoag and Mr. Nelson?

(Counsel for Marsh repeats objection above; also that it assumes a fact not in evidence.)

A. I was waiting to paint the engine, to go to a fair, and was in a big hurry for it.

Q. 9. When you saw Mr. Hoag and Mr. Nelson applying this stop plate did you see any one else present or assisting in the work?

(Counsel for Marsh objects to question as not surrebuttal, and repeats last above objection.)

A. Not at the time that they was at work at it.

[On the margin: Contradicts Hoag, for he says Marsh tries them.]

Q. 10. Did you see Mr. Michael Rainbow, John M. Henry, or Mr. Elon A. Marsh present or assisting in the application of the stop plate to the engine?

(Counsel for Marsh objects to question as not surrebutting and leading.)

A. I did not.

Q. 11. Was this the first engine employing this particular form of reversing gear that you had seen about the works?

(Above objection repeated by counsel for Marsh.)

A. Well, sir, it was; that I had any notice of or paid any attention to.

831 Q. 12. Were the works of Nichols, Shepard & Co. shut down at that time?

(Same objection by counsel for Marsh.)

A. I don't remember; I can't say.

Q. 13. You were waiting, were you not, to paint this particular engine?

(Same objection by counsel for Marsh.)

A. Yes, sir.

Q. 14. Was the engine referred to the first and only one that Mr. Marsh attempted to apply a reversing gear [to] at the works of Nichols, Shepard & Co.?

(Same objection by counsel for Marsh.)

A. I don't know, sir; I couldn't answer.

Q. 15. What is your position in the shops?

A. Am foreman of the paint shop.

Q. 16. Were you foreman of the paint shop at the time referred to?

A. Yes, sir.

Q. 17. Was that engine the first that came into the paint shop to be painted which showed a reversing gear similar to that now used or built by Nichols, Shepard & Co.?

(Counsel for Marsh objects to the question as not surrebutting, leading, and immaterial.)

A. It was.

Cross-examination of witness, WALLACE W. STILSON, by Mr PARKER, counsel for Marsh:

Cross-Q. 1. How long have you been at work for Nichols, Shepard & Co.?

A. I think it is about 14 years.

Cross-Q. 2. Do you remember the particular time in 1880 when Hoag and Nelson put a stop plate on a traction engine?

A. I do not.

Cross-Q. 3. How long were you observing them on the occasion you referred to?

832 A. One day, as I remember now, is all.

Cross-Q. 4. You painted the engine afterwards, I suppose?

A. Yes, sir.

Cross-Q. 5. What time in the day did you paint it?

A. I kept it there about six days, I think. It takes that long to paint one.

Cross-Q. 6. What time that day was it taken in there to paint?

A. I can't tell whether it was in the forenoon or afternoon, as I had other engines in there to paint; was very busy. I didn't notice the time it was taken in particularly.

Cross-Q. 7. Who took it in?

A. If I remember, I believe it was the mule team took it in. Mr. Jones is the driver.

Cross-Q. 8. Do you recollect how many engines there were in the shop then in process of painting?

A. I don't remember; four or five, I think.

Cross-Q. 9. Was any one assisting you in painting?

A. Yes, sir.

Cross-Q. 10. Who, and how many?

A. I declare—that was some time ago. There has been so many gone and come back. I had eight or ten men at that time. I don't remember the names now.

Cross-Q. 11. About how long after you saw Hoag and Nelson to work on it was it drawn into the paint shops?

A. Well, sir, I can't tell exactly. If it was fixed up it was two or three hours, probably. If not fixed up it was not so long. I don't remember whether it was fixed up or not.

[On the margin: Fired.]

By consent of counsel for respective parties an adjournment taken until 2 o'clock p. m. May 9th, 1883, at office of Nichols, Shepard & Co.

E. M. CONVERSE,
Notary Public.

At the office of Nichols, Shepard & Co., May 9th, 1883, at 2 o'clock p. m., the taking of depositions resumed.

833 Cross-examination continued by Mr. PARKER, counsel for Marsh—witness, WALLACE W. STILSON:

Cross-Q. 12. Are you sure that that engine was not run into the paint shop by its own power?

A. Well, sir, I couldn't tell positively, but I think it was drawn in by the mules.

Cross-Q. 13. They were drawing in engines every little while at that time, were they not?

A. Yes, sir.

Cross-Q. 14. You base your impression that it was drawn in by

the mules from the fact that they were drawing in engines with mules at that time?

A. I think it was.

Q. 15. Was this engine on the usual testing ground?

A. Yes, sir.

Q. 16. I suppose at that time, or that fall, they were frequently testing engines, were they not?

A. Yes, sir.

Q. 17. Do you know what Mr. Nelson's business was about the shops? If so, what?

A. He was foreman of the shipping gang.

[On the margin: What would he be doing about the stop plate—doing machinist's work? (How?)]

Q. 18. That is, if I understand you, he had the charge of the loading and sending away of threshers and engines from the shops; that is what you mean by that?

A. Yes, sir.

Q. 19. It is not unusual to see Mr. Hoag about engines, is it, when they are testing them?

(Counsel for Nichols, Shepard & Co. objects to the question and all the preceding questions on the cross-examination as not proper cross-examination.)

A. It is not.

Q. 20. At the time, then, that you saw Mr. Hoag there there was nothing special or unusual about it to attract your attention, was there?

A. Only the work they were doing; that is all.

Q. 21. What attracted your attention to the work?

834 A. The work they was doing—the putting on the stop they were working at.

Q. 22. When was your attention first called to the stop?

(Counsel for Nichols, Shepard & Co. objects to the question as not proper cross-examination.)

A. I don't know as I can remember the time exactly.

Q. 23. When was it called to it that day?

A. Well, I went out there a good many times that day to see how far along they had got so I could get the engine in.

Q. 24. That you had done on other occasions, had you not?

A. Not unless it was getting pretty late, so I could get my work done during the day.

Q. 25. Well, you had been out there on other occasions to see how they were getting along testing engines?

A. Yes, sir.

Q. 26. Was it getting pretty late on this occasion?

A. It was, according to the time I had to paint it up for the fair—to get it ready.

Q. 27. What time in the day was it, if you recollect?

A. I don't recollect what time of the day it was.

Q. 28. How long was Nelson working at it?

(Counsel for Nichols, Shepard & Co. objects to the question as not proper cross-examination.)

A. I do not know.
Q. 29. How long was Hoag working on it?
A. I don't know.
Q. 30. Can't you give us some idea?
A. I cannot.
Q. 31. Was it one hour or three hours?
A. More than three, I should think.
Q. 32. Was it a half a day?
A. I don't remember whether it was or not.
Q. 33. Can you say it was not more than a half a day?
A. I cannot.

835 Q. 34. And you say you did not see Mr. Marsh there at all during the time Nelson and Hoag were working on that engine?

A. No, sir.
Q. 35. That he was not present?
A. I think he was around the works somewhere; I couldn't say where.
Q. 36. That is, you didn't see him?
A. I might have seen him around the works somewhere, but I don't remember whether I did or not; I couldn't say.
Q. 37. Then if you can't say whether or not you saw him around the works, how can you be sure that you didn't see him, and that he was not present during the time you say Hoag was putting on this stop?
A. He was not out there when I was out there with them at any time.
Q. 38. How much of the time was you out there?
A. Probably three or four times during the day—during the time they was at work at it.
Q. 40. How much time in all did you spend there while you were out there?
A. I don't remember; I have no idea.
Q. 41. Was it over ten minutes?
A. Probably not, at a time.
Q. 42. Was it forty or fifty minutes for the four or five times?
A. It might have been that long and it might not.
Q. 43. Do you think that is a fair statement of the length of time?
A. I should think it was about that time.
Q. 44. Would you be likely to spend forty or fifty minutes during three or four hours in watching Hoag experiment on an engine when you had a good deal other work and was very busy?
A. Yes, sir; I would, sir.
Q. 46. Then that is a sort of custom with you, is it?
A. It is; yes, when anything new is going on.

Q. 47. Are you always notified when anything new is go-
836 ing on, so that you can leave the paint shop and the men

under your charge when you are very busy and go out and stand around and watch it?

[On the margin: Fee, fo, fum.]

A. No, sir; not always.

Q. 48. Didn't you see Marsh pass between the engine and the blacksmith shop, at any time on that occasion, back and forth?

A. I don't remember that I did, sir; my work was painting up the fair work; I was busy in the other end of the building—the paint shop.

Q. 49. Then you don't undertake to say that Marsh was not there and passing backwards and forwards during that time, do you?

A. Not at the time I was there he was not.

[On the margin: Contradicts Hoag.]

(Counsel for Marsh objects to the answer as evasive.)

Q. 50. Question repeated.

A. He might have passed by there a half a dozen times, for what know, when I was in the shop. What I am talking about is what I see.

Q. 51. And Rainbow, too, for that matter, might he not?

A. I can't tell you; I didn't see Mr. Rainbow at all.

Q. 52. You are not a machinist, are you?

A. I am not; no, sir.

Q. 54. What was the first thing you saw Hoag do on that particular occasion?

(Counsel for Nichols, Shepard & Co. objects to question as not proper cross-examination.)

A. It was to cut a hole through the boiler, as I recollect.

[On the margin: Hoag says Nelson cut the hole. Ditto Shepard.]

Q. 55. Was there one hole or more than one?

(Objection repeated.)

A. I don't remember whether there was or not.

Q. 56. Where was it on the boiler?

A. Between the smoke-stack and dome.

Q. 57. About how far from the dome, if you can tell?

A. I cannot.

Q. 58. Do you know how far the dome was from the smoke-stack—about how far?

837 A. Well, I don't know; three or four feet, I guess. I never measured.

Q. 59. This hole, then, would be somewhere in the centre of the shell of the boiler, would it not?

A. It would be further toward the back end, I should think.

Q. 60. That would be toward the fire-box?

A. No, sir; toward the other end.

Q. 61. Wasn't it on one side of the center line of the boiler?

A. On the left side as you stand facing the engine.

Q. 62. Are you sure about it?

A. Yes, sir. I am sure it was directly on top.

Q. 63. What kind of a piece of iron was it that they were putting on—I mean in shape and general description?

A. Well, I don't know. I should think it was 8 or 10 inches long, maybe more. I never measured it; a crooked iron. I don't know about the width; probably two or three inches wide. I am just guessing at all of this.

Q. 64. Anything else?

A. No; I guess not.

Q. 65. Please describe how it was attached to the boiler after it was on.

A. Why, I think it was screwed on with screws; it might have been bolted on with bolts.

Q. 67. I mean its position on the boiler, not particularly how it was fastened.

A. It stands upon the boiler—bolted on the boiler. (Witness illustrates by holding up a pen-holder perpendicularly.)

[On the margin: Shows form put on after engine was returned.]

I don't know of any other way to describe it.

Q. 68. About how high was the upper end above the boiler?

[On the margin: Don't know anything about it.]

(Counsel for Nichols, Shepard & Co. objects to the question and all the preceding ones as not proper cross-examination and will move to exclude the same.)

A. About 8 inches, if the iron was 8 inches long, I should judge.

838 Q. 69. Curved or straight?

A. Curved, I rather think.

Q. 70. Any screws in it?

A. I think there was a screw in it for the reverse top to work against; it may not be the correct name for it, though.

Q. 71. Where was that?

A. In the bottom of the casting.

Q. 72. The piece was cast iron, was it?

A. I couldn't tell for sure.

Q. 73. Are you sure there was no screw in the upper end?

(Counsel for Nichols, Shepard & Co. objects to question as not proper cross-examination and will move to exclude the same.)

A. I am sure there was a screw in the upper end.

[On the margin: Contradicts Hoag.]

Q. 74. After you saw Hoag working on this how long was it before the matter was called again to your attention?

(Objection repeated.)

A. It wasn't called to my attention at all, as I know of.

Q. 75. Haven't you talked with any one about it and about seeing Hoag at work on it?

(Objection repeated.)

A. I don't remember as I did.

Q. 76. From that time up to the present haven't you talked with Mr. Hoag or with the officers of Nichols, Shepard & Co. about Mr. Hoag's working on that engine and about what you could testify to?

(Objection repeated by counsel for Nichols, Shepard & Co.)

A. No, sir.

Q. 77. Haven't you talked with their counsel about what you could testify to?

A. No, sir.

Q. 78. So that when you came up here to-day to give your testimony none of the parties or their counsel knew what you could testify to. Is that correct?

(Counsel for Nichols, Shepard & Co. repeats objections last above.)

839 A. Yes, sir; they did not.

[On the margin: A lie.]

Q. 79. You say, in response to question No. 17, direct, that that particular engine was the first that came into the paint shop to be painted having a reversing gear similar to that now used or built by Nichols, Shepard & Co. I suppose you mean that it had the same form of reversing gear and the same form of stop as those now used or built?

(Counsel for Nichols, Shepard & Co. objects to the question for reasons before given, and also as misleading.)

A. Yes, sir.

Q. 80. But you don't know whether they had applied this before that occasion or not, as a matter of fact?

A. I don't think they ever had.

Q. 81. Are you sure they have not?

(Objection repeated by counsel for Nichols, Shepard & Co.)

A. I have never seen any in my presence.

Q. 82. Question repeated.

(Objection repeated.)

A. Yes, sir.

Redirect examination of witness, WALLACE W. STILSON, by ALEX. MAHON, Esq., counsel for Nichols, Shepard & Co.:

Redirect Q. 1. In your cross-examination you state that you never had any conversation with any one in regard to what you could testify to. Do you mean to say that you never talked to any one or

were asked if you remembered anything in regard to the circumstances connected with the painting of that particular engine?

(Counsel for Marsh objects to the question as not proper redirect.)

A. I presume likely, sir, that I was ordered by Mr. Nichols in regard to the painting of it—the style of it.

Q. 2. You do not seem to understand my question. Have
840 you ever been asked by any one since the date referred to when you superintended the painting of that engine whether you remember who was present on that date?

(Objection repeated.)

A. I don't remember that I ever have been asked the question.

Q. 3. Can't you remember whether you were asked by Mr. Nichols whether you remembered anything in regard to the painting of that engine or whether you remembered being present on that date?

(Counsel for Marsh objects to question as not proper redirect examination.)

A. I don't understand what day you say being present.

Q. 4. Has not Mr. Nichols asked you since the date you claimed to have seen Mr. Hoag and Mr. Nelson working on that engine whether you did not remember having been present and were not working for Nichols, Shepard & Co. on that date?

(Same objection repeated.)

A. He has not, to my recollection.

Q. 5. Have you had any conversation with Mr. Hoag or Mr. E. C. Nichols in regard to this matter and been asked whether you remembered anything about the circumstances connected with that particular engine?

A. No, sir.

Q. 6. At the time you were watching Mr. Hoag and Mr. Nelson at work on that engine was there anything particular connected with the circumstances which enables you to identify it?

(Counsel for Marsh objects to question as not proper redirect, the subject having been previously gone into both on direct and cross examination.)

A. No more than there is anything when they are putting anything new on engines. I can run them myself, and I like to try everything that is new.

Q. 7. Were you not ordered particularly to be on the lookout for that engine so as to be ready to paint it immediately?

841 (Counsel for Marsh objects to the question as not proper redirect and as leading.)

A. Yes, sir.

Q. 8. And you watched Mr. Hoag and Mr. Nelson and paid particular attention to this engine for this reason?

(Objection to question by counsel for Marsh as not proper redirect and as leading.)

A. Yes, sir.

Q. 9. Have you talked with Mr. Nichols lately in regard to this matter?

A. No, sir.

Q. 10. Not within the last month or so?

A. No, sir; nor ever.

[On the margin: See D. Q. 22.]

Q. 11. Was there anything particular connected with this engine that you know of for its being painted as soon as possible?

(Counsel for Marsh objects to the question as not proper redirect; the witness has already testified fully in relation to it.)

A. Only for the fair, that I know of.

Q. 12. Were you or not told by any one to finish the painting of this engine as soon as possible, so as to have it ready to go to the fair?

(Counsel for Marsh objects to the question as not proper redirect examination.)

A. Yes, sir.

Q. 13. Who by?

(Same objection by counsel for Marsh.)

A. Mr. Nichols and Mr. Hoag.

Q. 14. The other engines to which you referred to in your cross-examination as being in the paint shop were also for the fairs?

A. I think they were; all of them.

[On the margin: Can't, then, tell anything about it; got it all mixed.]

Q. 15. Different styles of engines being manufactured by the company, were they not?

A. Yes, sir.

842 By consent of counsel the taking of further deposition adjourned to May 10th, 1883, at 9 o'clock a. m., at office of Nichols, Shepard & Co.

E. M. CONVERSE,
Notary Public.

At the office of Nichols, Shepard & Co., May 10th, 1883, at 9 o'clock a. m., taking of depositions resumed.

Redirect examination of WALLACE W. STILSON by ALEX. MAHON, Esq., counsel for Nichols, Shepard & Co.:

Redirect Q. 16. Have you never testified before in this or any other case?

A. No, sir.

Q. 17. As foreman of the paint shop, is it your business to paint

the engines yourself, or is it your business to see that the machinery is brought to the paint shop and see that the men employed under you paint it?

(Counsel for Marsh objects to the question as leading, not proper redirect, nor surrebuttal.)

A. It is. It is my business to see that the work is got in there complete, ready for shipping when it leaves my shop. Some parts of it I do myself and the remainder I see it is done.

Q. 18. Did you understand when you were asked in your examination yesterday that the question in regard to your having talked to any one in regard to this matter referred to any statement that you might have made in regard to what you could have testified to or to any simple conversation as to your whereabouts upon the date referred to when you were watching or waiting to paint the engine?

A. I did not.

Q. 19. Well, how did you understand it?

A. I understood it that I should tell whether Mr. Nichols or Mr. Hoag had told me what to swear to in this court.

Q. 20. Well, did they or not ever have a casual conversation with you, either Mr. Nichols or Mr. Hoag, in which you were asked anything in regard to this matter?

A. Yes, sir.

843 Q. 21. Well, what did either one or both say to you, if you can remember?

(Counsel for Marsh objects to question as not proper redirect examination, as incompetent and immaterial, and not surrebuttal.)

A. About a year ago this present time, after the witnesses had all given their testimony in, I supposed it was all over with, I asked Mr. Hoag if he knew that I was present at the time he and Mr. Nelson were putting the stop on, and he said he remembered my being there, and the reply was that if he had known it he would had me in the suit. I believe that is it as near as I can get at it.

Q. 22. Did you afterwards have a conversation with Mr. Nichols about the same matter?

(Same objection by counsel for Marsh.)

[On the margin: R. D. See C. Q. 18.]

Q. 23. Then the reason you stated yesterday that you had not had any conversation with Mr. Nichols or Mr. Hoag was that you thought all said questions referred to the question whether Mr. Nichols or Mr. Hoag had told you what to swear to?

(Counsel for Marsh objects to the question as leading, not proper redirect, incompetent, immaterial, and not surrebutting.)

A. I did.

Recross-examination of witness, WALLACE W. STILSON, by Mr. PARKER, counsel for Marsh, without waiving any objections:

Recross-Q. 1. When you were asked by Mr. Mahon yesterday this question, redirect No. 5: "Have you had any conversation with Mr. Hoag or Mr. E. C. Nichols in regard to this matter, and been asked whether you remembered anything about the circumstances connected with that particular engine," and answered, "No, sir," do you mean to say that you understood that the ques-
844 tion referred to requests on the part of Hoag or Nichols to swear for them in any particular manner?

(By request of witness the notary re-reads the question, and Mr. Metcalf, of counsel for Marsh, asks that the notary make a record of the fact that witness asks the question re-read.

Counsel for Nichols, Shepard & Co. requests that in view of the counsel for Marsh interposing this request or statement as the witness was about to answer this long question that the notary now read the question to the witness, so that he shall understand the same and be given a chance to answer the same intelligently.

Counsel for Marsh states that he hasn't the slightest objection to giving the witness a chance.

Question re-read to witness by notary.)

A. I did.

Q. 2. Whom have you talked with since last night about this matter?

(Counsel for Nichols, Shepard & Co. objects to the question for the reason that it has not been shown that there has been any conversation with anybody since last night, and as not being proper recross-examination.)

A. Do you mean since court adjourned yesterday afternoon?

Q. 3. I mean since you left the stand yesterday.

(Objection by counsel for Nichols, Shepard & Co. repeated.)

A. I have talked with Mr. E. C. Nichols.

Q. 4. Had you not told Mr. E. C. Nichols who you saw at work on the engine more than a month ago?

A. I don't remember whether I did or not.

Q. 5. Wasn't it more than six months ago?

A. I don't know as Mr. Nichols had any conversation with me—I don't remember—until three or four days ago.

Q. 6. Then you wouldn't say positively that he did not?

A. I don't remember of having any conversation with him in regard to the matter.

845 Q. 7. Question repeated.

A. No, sir; I guess not.

Q. 8. After the engines you had in the paint shop and this engine referred to were sent away to the fairs, were they returned or any of them?

(Counsel for Nichols, Shepard & Co. objects to the question as not proper recross.)

A. I don't remember whether they came back or not.

Q. 9. Don't you remember whether this particular one with this reversing gear came back?

(Objection repeated by counsel for Nichols, Shepard & Co.)

A. I do not know.

Q. 10. In order to refresh your recollection, I will state that it is evidence that this engine was returned from the fairs and the stop plate changed. Do you recollect anything about it?

(Counsel for Nichols, Shepard & Co. objects to the question as entirely irrelevant and immaterial, and also as not being proper recross-examination, and moves to strike the same out.)

A. I do not.

Q. 11. When engines are returned in that way are they repainted?

(Objection by counsel for N., S. & Co. repeated.)

A. Sometimes they need it and sometimes they don't; when they need repainting they are painted.

Q. 12. If changes are made in the mechanism—parts taken off and replaced by new parts—they probably would be repainted, would they not?

(Objection repeated.)

A. Yes, sir.

Q. 13. In painting engines do you keep any record of them by number or otherwise?

(Objection repeated.)

A. I do not, unless I have orders to; it is not the custom, but I frequently have orders to keep track of engines.

846 Q. 14. Did you have any orders to keep track of this engine?

(Objection repeated.)

A. I did not until I got through painting it.

Q. 15. What were those orders?

(Objection repeated.)

A. Only to hurry it up for the fair.

Q. 16. You kept no record of it, then, by number or any other means of identification? I suppose they are all numbered?

A. I did not.

Q. 17. Did you keep any record so that you could tell when this particular engine was painted or in the paint shop?

A. No, sir.

WALLACE W. STILSON.

Subscribed and sworn to before me this 10th day of May, A. D. 1883.

EUGENE M. CONVERSE,
Notary Public.

[SEAL.]

Franklin T. Roberts.

FRANKLIN T. ROBERTS, produced as a witness and being duly sworn, does depose and say, in answer to interrogatories proposed to him by ALEX. MAHON, Esq., counsel for Nichols, Shepard & Co., as follows, to wit:

Direct Question 1. State your name, age, residence, and occupation.

Answer. Franklin T. Roberts; age, 35 years; residence, Battle Creek, Michigan; my occupation is clerk in the office of Nichols, Shepard & Co.

Q. 2. You are chief clerk, are you not?

A. Yes, sir; I am.

Q. 3. Do you know whether or not Nichols, Shepard &
847 Co. keep daily cash book, where the entries of all moneys paid and received are kept?

A. I do.

Q. 4. Can you produce that book or, if more than one, can you produce the book or books containing the payments and receipts for the months of July, August, September, and October for the year 1880? And, if so, please produce it.

(Counsel for Marsh objects to question as not proper surrebuttal, tal, as within the commissioner's decision, irrelevant and incompetent, immaterial, not original evidence of any facts supposed to be recorded in said books, and no proper foundation laid for their introduction.)

A. I can and do produce it.

(Book marked "Franklin T. Roberts No. 1, May 10, 1883, E. M. Converse, notary public," for identification.)

Witness says: This book is a memorandum book or blotter of the daily cash transactions kept in the office of Nichols, Shepard & Co. Upon it are entered all items of cash or moneys paid out by Nichols, Shepard & Co. The only instances where items are not fully entered on this book are from our bills-receivable department. The items from that department are stated elsewhere, and copied to this book by total footings; also the total footings of amounts paid for labor are copied to this book by total footings from the pay-roll book. With the exception of these two items of our collection department and pay-roll department, all items are included in this book.

Q. 5. Does that book marked "Franklin T. Roberts No. 1" contain a record of the cash transactions for the months of July, August, September, and October, 1880, and do you know whether that is the identical book kept by Nichols, Shepard & Co. at the time referred to?

(Objection repeated, and also the book is the best evidence of what it contains.)

A. It does and it is.

(Counsel for Nichols, Shepard & Co. offers the book marked
848 "Franklin T. Roberts No. 1" in evidence and requests the notary to mark the same "Hoag's Exhibit Franklin T. Roberts No. 1."

Counsel for Marsh repeats his former objection, and adds that it does not appear to be a book of original entries.)

Book marked by notary as "Hoag's Exhibit Franklin T. Roberts No. 1."

Q. 6. This book contains, does it not, all small items of receipts and expenses that could have been paid at the time before mentioned, and also the totals of the labor and other account referred to by you?

(Objection repeated by counsel for Marsh; also question is leading; that the book is the best evidence of what it contains.)

A. It does.

Q. 7. And is it necessary or not that said accounts should be entered therein?

(Objection by counsel for Marsh to all testimony founded on the book.)

A. It is.

Q. 8. These iteme are entered into the book by the different clerks who have charge of the different accounts?

A. They are.

Q. 9. Are you or not a notary public?

A. I am.

(Paper offered and same marked "Franklin T. Roberts No. 2" by notary for identification, and same shown witness.)

Q. 10. Is the signature there as notary public your signature or not?

(Counsel for Marsh objects to question as irrelevant, incompetent, and immaterial.)

A. It is.

Q. 11. Did the party whose signature to the affidavit appears sign and subscribe the same before you on the date therein referred to? I refer to the paper marked "Franklin T. Roberts No. 2," now handed you.

849 (Counsel for Marsh repeats objection as incompetent, irrelevant, immaterial, and not surrebutting, and that the notarial certificate is the only evidence receivable to prove the fact involved in question.)

A. He did.

Q. 12. Can you identify his signature to said paper?

(Objection repeated by counsel for Marsh.)

A. I can.

(Paper now offered in evidence as the original affidavit of George A. Stillman and in support of the motion before the honorable Commissioner of Patents to take surrebuttal testimony on behalf of Nichols, Shepard & Co., assignees of Hoag, and counsel for Nichols, Shepard & Co. requests the notary to mark the same in evidence as "Hoag's Exhibit Franklin T. Roberts No. 2.")

Paper referred to shown counsel for Marsh, who asks witness:

Q. 1. Did you write the body of this affidavit?

(Counsel for Nichols, Shepard & Co. objects to the question as being improper at this time; and, further, that after the signature of the party making the affidavit, and the same had been sworn to, it becomes his, independent of whom the body of the affidavit was written by.)

A. I did not.

Q. 2. Do you know who did?

(Objection repeated.)

A. I did not see it written.

Q. 3. Do you know the handwriting?

(Objection repeated.)

A. I think I do.

Q. 4. Whose is it?

(Objection repeated.)

A. I think a portion of it was written by F. W. Dunning and a portion of it by E. C. Nichols.

Q. 5. What portion of it by Mr. Dunning?

(Objection repeated.)

A. The first nine (9) lines of the document.

850 Q. 6. You mean the entitling to the instrument?

(Objection repeated.)

[On the margin: Object to exclude this affidavit.]

A. Yes, sir.

(Counsel for Marsh now objects to the introduction of said affidavit in evidence for the reasons—

1st. That there is no venue laid in said affidavit.

2d. That it appears to be written, not by the affiant, but a party in interest.

3d. That no proper foundation has been laid for its introduction.

4th. That it is not such a statement or such previous testimony of the affiant as would entitle it, on a showing of his death, to be read in evidence, it being a mere *ex parte* statement.

5th. That counsel for Marsh has had no opportunity to cross-examine said Stillman.

6th. Is incompetent, irrelevant, and immaterial.

Paper marked by notary as "Hoag Exhibit Franklin T. Roberts No. 2" and received in evidence.)

By consent of counsel, taking of depositions in this matter adjourned to 2 o'clock p. m., May 10, 1883, at the office of Nichols, Shepard & Co.

E. M. CONVERSE,
Notary Public.

At the office of Nichols, Shepard & Co., in Battle Creek, May 10th, 1883, at 2 o'clock p. m., taking of depositions resumed.

Direct examination of witness, FRANKLIN T. ROBERTS, continued:

Direct Question 13. Mr. Roberts, at the time of the execution of the paper "Franklin T. Roberts No. 2" were you acting in your capacity as notary public in Battle Creek, Michigan, and was said affidavit subscribed and sworn to before you in that place?

(Counsel for Marsh objects to the question on the ground
851 that he cannot supply the venue to the affidavit by parol evidence.)

A. I was and it was.

Q. 14. Is the book marked "Franklin T. Roberts No. 1" a book of original entries?

(Counsel for Marsh objects to question, as witness has already stated how the book is made up; and, further, that from such testimony it appears that the entries in said book are made by other persons than himself, and that his testimony would be but hearsay; and, further, the objections are renewed that were made to the introduction of the book itself in evidence.)

A. It is, with the exceptions before mentioned.

Q. 15. What are those exceptions?

A. The items that came from our bills receivable or collection department and the pay-roll department.

Q. 16. In what book are the original entries of the pay department or pay-roll?

(Counsel for Marsh objects to the question as immaterial.)

A. Original entries of payments made on other days than the regular pay days are made in this book, the exhibit. Payments that are made on regular pay days are entered on the book containing the pay-roll.

Q. 17. By whom are the pay-roll entries made on either of these books?

A. Usually by the paymaster; the regular paymaster.

Q. 18. Who is the regular paymaster of Nichols, Shepard & Co.?

(Counsel for Marsh objects to question as immaterial.)

A. George F. Barrows.

Q. 19. Do you know whether he makes all the entries in the regular pay-roll?

(Counsel for Marsh requests the notary to caution the witness to testify from his own knowledge, which the notary does accordingly.)

A. He does.

852 Q. 20. Do you, as chief clerk for Nichols, Shepard & Co., have a general supervision over the clerical force employed by them?

A. I do.

Q. 21. Do you know whether the party who executed this affidavit, "Franklin T. Roberts No. 2," was in the employ of Nichols, Shepard & Co. at any time?

A. I do.

Q. 22. Can you tell me about when he was employed by them?

A. I can.

Q. 23. Give me as near as you can the time he was employed, if you know.

A. At the time the corporation of Nichols, Shepard & Co. was organized.

Q. 24. When was that, if you know?

A. I think it was in June, 1878.

Q. 25. Has he been employed continually by them up to the present time or not?

A. He has; up to the time of his death.

Q. 26. When was that?

A. I think it was in February, 1883.

(Counsel for Marsh, before proceeding to cross-examine the witness, requests counsel for Nichols, Shephard & Co. to state what he expects to show by the introduction of the book marked "Hoag's Exhibit Franklin T. Roberts No. 1."

Counsel for Nichols, Shepard & Co. replies that what he expects to prove by the introduction of this and other books and time-slips is fully set forth in the affidavits and motion papers filed in the United States Patent Office in support of Hoag's motion by his assignees to take this surrebuttal testimony.

Counsel for Marsh declines to proceed to cross-examination of witness until all the books and papers are produced, the particular part of the book supposed to be material to this case not being pointed out.

853 Counsel for Nichols, Shepard & Co. replies that as the point of inquiry in this case is well known by counsel for Marsh relates to the employment and payment on a particular day of parties testifying in rebuttal on behalf of Mr. Marsh, and as the book is headed with the dates of the payments, and as he has included in his examination four months of payments made, he cannot do more than he has done further than to produce pay-roll for the inspection and assistance of counsel for Marsh, which he will now do. He further states that he will produce any account book, time-roll,

or slips which counsel for Marsh may request at this time which he can show has any bearing on the case or will assist him in the least in the cross-examination of this or other witness to be produced. Counsel for Nichols, Shepard & Co. now produces, as before stated, the "labor record" from November 1st, 1879, to June 27th, 1881, inclusive, including the time and pay of the different employees and workmen of said Nichols, Shepard & Co. and including the dates which are referred to, as showing that the parties produced in rebuttal by Marsh were not in their employ nor at work at their shops on the days claimed by them. He also produces "labor ledger," embracing the separate accounts of all the parties in their employ, showing the number of days' labor, amount of cash paid to each during the dates therein shown, and requests the notary to mark said books for identification "Hoag's Exhibits Franklin T. Roberts Nos. 3 and 4." He also produces time-rolls of Nichols, Shepard & Co. from July 15th, 1880, to October 1st, 1880, and requests the notary to mark the same "Hoag's Exhibit Franklin T. Roberts No. 5" for identification. Labor record and labor ledger respectively marked "Hoag's Exhibits Franklin T. Roberts Nos. 3 and 4" and time-rolls of N., S. & Co. marked "Hoag's Exhibit Franklin T. Roberts No. 5" by notary public.)

Direct Q. 27. The books marked "Franklin T. Roberts No. 3" and "Franklin T. Roberts No. 4" and papers, time-rolls,
854 "Franklin T. Roberts No. 5" shown witness, and he requested to identify and to state what the same are.

A. The labor record marked "Franklin T. Roberts No. 3" is a book in which is enrolled the names of the employees in and about the factory of Nichols, Shepard & Co. and in which is kept a record of the time that each is employed, and also of the *payments* of all payments made to each. The labor ledger marked "Franklin T. Roberts No. 4" is the book in which are kept the accounts of the several employees, and the accounts in this ledger are made up from the labor record. The next is lists of the employees in their several departments, and upon which the foreman of each department keeps a record of the time that the employees are at work for the company. These lists are gathered up and taken to the office of Nichols, Shepard & Co. and copied to the labor record. The lists are marked "Franklin T. Roberts No. 5."

Q. 28. Are these the books referred to by you, "Franklin T. Roberts Nos. 3 and 4," as being kept by Mr. Barrows?

A. They are.

Q. 29. Do they embrace the accounts of all laborers employed by Nichols, Shepard & Co. in the months of July, August, September, and October, in the year 1880?

A. They do.

Q. 30. Do the time-rolls embrace the time of all laborers employed in the different shops by Nichols, Shepard & Co. during the months of July, August, and September, 1880?

A. They do; from July 15th, 1880, to October 1st, 1880.

Q. 31. Were those the only labor ledger, labor record, and time-slips

kept by Nichols, Shepard & Co. or their employees for them during the dates above mentioned?

A. They were.

Q. 32. They show all payments and time of employees of that concern that could have possibly been made between those dates?

(Counsel for Marsh objects to the question as leading.)

A. I think they do.

855 (Counsel for Nichols, Shepard & Co., having now produced in evidence or offered the same at this time at the request of counsel for Marsh and identified them, now turns the witness over to counsel for Marsh for cross-examination, and counsel for Nichols, Shepard & Co. does now offer the said books, "Hoag's Exhibits Franklin T. Roberts Nos. 3 and 4," and the time-rolls, "Franklin T. Roberts No. 5," in evidence again.

Before entering his objection counsel for Marsh desires to ask the witness Roberts a few questions in relation to the exhibits.)

Q. 1. These books, "Hoag's Exhibits Franklin T. Roberts Nos. 3 and 4," are not in your handwriting, are they?

A. They are not.

Q. 2. In whose handwriting are they, if you know?

A. I think I identify the handwriting as that of George F. Barrows.

Q. 3. Did you see him make the entries in these exhibits?

A. Not all of them.

Q. 4. Do you know whether any entries were made in any other books or papers of the transactions recorded in these exhibits before they were so recorded?

A. I do not.

Q. 5. Can you say whether or not these are books of original entries?

A. They are books of original entries.

Q. 6. What do you understand by books of original entries?

A. I understand them to be books in which are copied any transactions.

Q. 7. Do you know whether the work of which these books purport to be a record was actually done by the persons whose names appear therein?

856 A. I was not personally present at the time the work was purported to be done.

Q. 8. Do you know whether the payments of money purported to be recorded in these books were actually made—*i. e.*, of your own knowledge?

A. I did not personally see any of the payments made.

Q. 10. Then you don't know of your own knowledge that the books referred to are actually a correct record of time and payment?

A. No.

Q. 11. Have you had entire charge of these books? And, if not, state to what extent you have had charge of them from the 1st of September, 1880.

A. I never had any charge of the books.

Q. 12. Do you know anything about the manner in which they were kept particularly or only in a general way, as a part of the system of book-keeping? I mean did you have particular knowledge of the manner and facts of the entries in these books, they coming under your observation repeatedly, or is your knowledge of them based principally upon the knowledge of their existence, as a part of the book-keeping system of Nichols, Shepard & Co.?

A. Well, my knowledge is based on the details of the system as well as on the general system of book-keeping.

Q. 13. Referring to "Hoag's Exhibit Franklin T. Roberts No. 5," did you see those pay-rolls or time-rolls made out?

A. No.

Q. 14. You have no personal knowledge that the men whose names are here actually worked the time that is specified, have you?

A. No.

Q. 15. And can you swear positively of your own knowledge that they show or that Exhibits Nos. 3 and 4 show the names of all the laborers that may have worked more or less or all of the time that work has been done by laborers for Nichols, Shepard & Co. during the times purporting to be covered by these exhibits?

857 A. No.

(Counsel for Marsh now objects to the introduction of these exhibits on the ground heretofore specified in relation to Hoag's Exhibit Franklin T. Roberts, No. 1; and, further, that Nos. 3 and 4 are not shown to be books of original entries, and generally that the proper foundation has not been laid for their introduction by competent testimony.

Counsel for Nichols, Shepard & Co. states that these books, Exhibits Nos. 3 and 4, and time-slips, Exhibit No. 5, were introduced and offered in evidence by him at the request or demand of Mr. Parker, of counsel for Marsh, and for the purpose of assisting him, Mr. Parker, in his cross-examination of this witness, Roberts, on other matters, it not being claimed by counsel for Nichols, Shepard & Co. that this witness knew or could testify to the payments or time entries made therein, and he, said counsel for Nichols, Shepard & Co., only examined the witness as far as it was necessary to identify these books and time-slips as the ones used by Nichols, Shepard & Co. for the purposes stated; that after this, Mr. Parker having proceeded to cross-examine the witness, he has thereby waived his right to object at this time.

Mr. Parker, counsel for Marsh, simply refers to the record and rules of practice governing the production of books and papers as testimony, and counsel for Marsh gives notice that he will move to strike from the record the books and papers for want of proper proof preliminary to their admission.)

FRANKLIN T. ROBERTS.

Taken, subscribed, and sworn to before me this 10th day of May, A. D. 1883.

EUGENE M. CONVERSE,
Notary Public.

[SEAL.]

64—136

By consent an adjournment of further depositions taken until May 11th, 1883, at 9 o'clock a. m., at the office of Nichols, Shepard & Co.

E. M. CONVERSE,
Notary Public.

May 10th, 1883.

858 At the office of Nichols, Shepard & Co., May 11th, 1883, at 9 o'clock a. m., the taking of depositions resumed in pursuance of adjournment.

Andrew Thomson.

ANDREW THOMSON, produced as a witness and being first duly sworn, does depose and say, in answer to interrogatories proposed to him by ALEX. MAHON, Esq., counsel for Nichols, Shepard & Co., as follows, to wit:

Direct Question 1. State your name, age, residence, and occupation.

Answer. Andrew Thomson; thirty-five years; residence, Battle Creek, Michigan, and am by occupation a machinist.

Q. 2. Were you at work for Nichols, Shepard & Co. in the latter part of the summer and first part of the fall of 1880, when the shops were shut down?

A. Yes.

Q. 3. Were you at work in the shops from the 1st to the 15th of September?

A. Yes.

Q. 4. What is your position and what was it at that time?

A. Foreman of the machine shops—the engine department.

Q. 5. You are compelled, are you not, to know the different workmen working under you or employed in your particular shop?

A. Yes.

Q. 6. Is there a blacksmith's forge in your shop or the building in which you work, or was there one at the time above referred to?

A. Yes.

Q. 7. Who worked at that forge up to the time the shops were shut down?

(Counsel for Marsh objects to the question as incompetent, immaterial, and not surrebuttal.)

A. Robert Mamby, Michael Carrigan. There are three forges in that shop.

859 Q. 8. Do you know Michael Rainbow?

A. Yes.

Q. 9. Had he worked at one of those forges before the shops were shut down?

A. Yes.

Q. 10. Was he at work at any of them during the time the shop was shut down?

(Counsel for Marsh objects to the question as not surrebutting and leading.)

A. No.

Q. 11. Was he working about the shop at all during the first part of September—say between the 1st and 15th of September, 1880?

A. No.

Q. 12. Do you know whether he was at work at all at the works of Nichols, Shepard & Co. during that time?

A. No.

Q. 13. Do you mean that he was not?

(Counsel for Marsh objects to the question as leading.)

A. Yes; in those shops.

Q. 14. Do you keep a time-roll of the men working in your shop?

A. Yes.

Q. 15. Please examine the paper now handed you and tell me if you know what it is, the same being "Hoag's Exhibit Franklin T. Roberts No. 5"?

(Witness shown "Hoag's Exhibit Franklin T. Roberts No. 5."
Counsel for Marsh renews his original objection to this exhibit and all testimony founded on it.
Question withdrawn by counsel for Nichols, Shepard & Co.)

Q. 16. Do you know John Henry or John M. Henry?

A. Yes.

Q. 17. Was he or not at work in your shop on the 8th of September, 1880?

A. He was not.

860 Q. 18. Do you know whether he was at work about the shops of Nichols, Shepard & Co. on that date?

A. I do not.

Q. 19. Did you see him about the shops on that date?

(Counsel for Marsh objects to the question as incompetent.)

A. I did not.

Cross-examination of witness, ANDREW THOMSON, by Mr. PARKER, counsel for Marsh:

Cross-Q. 1. When was your attention first called to the point whether or not Rainbow and Henry worked in the shop on the 8th of September, 1880?

(Counsel for Nichols, Shepard & Co. objects to the question as incompetent and immaterial.)

A. In conversation with Michael Rainbow himself at that time. I cannot give you the exact date.

Cross-Q. 2. State the date as near as you can.

(Objection repeated.)

A. After this suit was begun. I couldn't tell.

Q. 3. Well, can't you tell whether it was last year, the year before or this year? Can't you give us some idea about it?

(Objection repeated.)

A. In 1881. I will put it that way.

Cross-Q. 4. Well, can't you say what part of the year it was; whether it was in the summer, fall, or winter of 1881?

(Objection repeated by counsel for Nichols, Shepard & Co.)

A. I could not.

Cross-Q. 5. Where was this conversation with Rainbow that first called your attention to it?

(Objection repeated.)

A. At his forge.

Cross-Q. 6. What shop was that in?

A. In the boiler shop.

861 Cross-Q. 7. What was said?

A. The conversation was on the suit, and we were arguing with one and another, he saying I was'nt present and I saying he wasn't present at that time; that is all.

Cross-Q. 8. When you say boiler shop you mean the boiler shop of Nichols, Shepard & Co.?

A. Yes, sir; it is numbered.

(Counsel for Marsh offers a paper and asks that the notary mark the same for identification as "Andrew Thomson No. 1." The said paper is admitted by counsel for Nichols, Shepard & Co. as being taken from one of the circulars of Nichols, Shepard & Co.; the same marked by notary as "Andrew Thomson No. 1."

Paper marked "Andrew Thomson No. 1" shown witness.)

Cross-Q. 9. Will you state whether or not this wood-cut is a tolerably fair representation of the relations of the various buildings comprising the works of Nichols, Shepard & Co.?

(Counsel for Nichols, Shepard & Co. objects to the paper, and also the question, as being entirely irrelevant and immaterial and not proper cross-examination.)

A. It is.

Cross-Q. 10. Will you point out and mark the boiler shop? Just put your initials on the boiler shop.

A. (Witness marked building *marked* "engine shop" "A. T. 1" in red.)

Cross-Q. 11. Now will you mark the building that you say contained the forge that Rainbow worked at previous to September, 1880?

A. Yes. (Witness marks building called "engine shop" "A. T. 2" in red ink.)

Cross-Q. 12. What reason have you for knowing that Rainbow was not at work on the 8th of September, 1880?

A. I was foreman of the shops at that time and ought to have known.

Cross-Q. 13. When did you become foreman?

862 A. Immediately after the withdrawal of the other foreman, Griffith or Griffin.

Cross-Q. 14. When did he withdraw?

A. The day after the shops shut down.

Cross-Q. 15. You have been sworn in this matter before, have you not, Mr. Thomson?

A. I have.

Cross-Q. 16. Of what shop or shops did you become foreman?

A. No. 2, No. 1 not having been occupied yet.

Cross-Q. 17. In speaking of Nos. 1 and 2 do you mean these Nos. 1 and 2 you have marked on this exhibit, "Andrew Thomson No. 1"?

A. Yes.

Cross-Q. 18. Now, were you appointed foreman until the shops commenced to running with full force again?

A. Yes.

Cross-Q. 19. Did you make out the time-roll for those shops while you were foreman?

(Counsel for Nichols, Shepard & Co. objects to the question as not being proper cross-examination.)

A. I do not remember, previous to starting up.

Cross-Q. 20. Do you know whether any time-rolls were made of those shops previous to starting up?

(Objection repeated by counsel for Nichols, Shepard & Co.)

A. Yes; there must have been.

Cross-Q. 21. Do you know of your own knowledge that there were?

(Objection repeated.)

A. I cannot remember.

Cross-Q. 22. Have you looked over this exhibit—"Hoag's Exhibit, Franklin T. Roberts No. 5"—purporting to be the time-rolls from July 15th to October 1st, 1880?

(Counsel for Nichols, Shepard & Co. objects to question as irrelevant, immaterial, and not proper cross-examination.)

A. I have not.

863 Cross-Q. 23. Will you now look at them and state if there are any there you have signed as correct?

Exhibit "Franklin T. Roberts No. 5" shown witness.

(Objection repeated by counsel for Nichols, Shepard & Co.)

A. There is not.

Cross-Q. 24. Are there any there made by you and in your handwriting?

A. There is not.

Cross-Q. 25. Are you acquainted with the manner of making up the time-rolls?

(Counsel for Nichols, Shepard & Co. repeats his objection.)

A. Only as they appear on the sheets in reference to the men under my control.

Cross-Q. 26. Well, you make up for your shop statements of the men's time similar to these in this exhibit, Franklin T. Roberts No. 5, do you not?

(Counsel for Nichols, Shepard & Co. repeats his objection.)

A. I do when the shops are running.

Cross-Q. 27. So that you are acquainted with these forms?

A. Yes.

Cross-Q. 28. Calling your attention to sheet four (4) of this exhibit, "Franklin T. Roberts No. 5," to the word "Thomson," will you explain what the row of figures (opposite that name) mean, commencing at the first, so that we may understand the manner in which it is kept?

(Objection repeated by counsel for Nichols, Shepard & Co.)

A. The figure "10" is ten hours over time for Sunday. The following 12 fives are five hours for the forenoon and five (5) hours for the afternoon. The figure seven (7) following stands for the number of days, constituting the whole number of hours during the week, or seven days on the ten (10) hour system.

864 Cross-Q. 29. How do you know that the first 10 refers to Sunday work?

A. Because it is invariably put in that place or position on the time-roll.

Cross-Q. 30. Does it not sometimes happen that a man would work some hours in a previous week at odd times and then have it credited up on the next regular time-roll in addition to the other work shown on the time-roll?

(Counsel for Nichols, Shepard & Co. objects to this and previous question for reason before given to cross-question 22.)

A. No; every hour a man works over the time on each day is given to him opposite his name on the following day.

Cross-Q. 31. Question repeated. I was not speaking of extra time or over time merely. I mean that if a man works, say, one hour or two in one day during a week, and then perhaps an hour or so another day or another week, and that subsequently, a week or so later, he commences regular work, would not the odd times he had worked previously to the regular work be added to the time roll of the week of regular work? I don't mean this as a regular custom, but does not this sometimes happen?

(Objection by counsel for Nichols, Shepard & Co. repeated.)

A. I never knew of such an instance.

Cross-Q. 32. That is to say, you don't recollect of such an instance?

A. I never heard of such an instance and never practice that myself.

Cross-Q. 33. You are positive about that, are you, so far as your knowledge extends?

A. Yes.

Cross-Q. 34. Are you any more positive about that than you are that you became foreman of those shops the fore part of September, 1880?

A. Just as positive; yes, in my own case.

865 Cross-Q. 35. Have you any recollection of what you were doing on the 8th of September, 1880?

[On the margin: See p. 147, C. Q. 9.]

A. Not on that particular day.

Cross-Q. 36. Then you have no recollection of whom you were working with on that particular day, have you, and what they were doing?

A. I have.

Cross-Q. 37. Whom were you working with?

A. A. J. Hoag, E. Ethridge, and others. I don't remember their names.

Cross-Q. 38. What were they doing?

A. Those names that I have mentioned—A. J. Hoag, E. Ethridge—were at times assisting me in various jobs of repairs about the shop. That is all.

By consent, the taking of further depositions in this matter adjourned to 2 o'clock p. m., May 11th, 1883, at the office of Nichols, Shepard & Co., in Battle Creek, Michigan.

E. M. CONVERSE,
Notary Public.

At the office of Nichols, Shepard & Co., in Battle Creek, Michigan, May 11th, 1883, at 2 o'clock p. m., taking of depositions resumed in pursuance of adjournment.

E. M. CONVERSE,
Notary Public.

Cross-examination of Mr. ANDREW THOMSON continued by Mr. PARKER, counsel for Marsh:

Cross-Q. 39. Referring to this diagram, Andrew Thomson No. 1, which shop do you mean?

A. No. 1.

Cross-Q. 40. Do you now recollect what jobs of repairing you were doing in that shop on that day?

A. I do not on that particular day.

Cross-Q. 41. Do you know how much of the day those men were engaged with you?

A. I do not.

866 Cross-Q. 42. At that time did you have charge of the men in shop marked "A. T. 2"?

A. Yes.

Cross-Q. 43. How many forges were there in that shop then?

A. Four (4).

Cross-Q. 44. Will you describe them?

(Counsel for Nichols, Shepard & Co. objects to question as irrelevant and immaterial.)

A. Three (3) brick forges, one portable forge.

Cross-Q. 45. What kind of a forge was it that Rainbow worked at during the preceding year?

A. A brick forge.

Cross-Q. 46. Referring to this exhibit, Andrew Thomson No. 1, in which shop was this forge?

A. No. 2.

Cross-Q. 47. Now, how do you know that he was not at work at that forge on that day or on that 8th of September?

A. Because I have no recollection of his being there.

Cross-Q. 48. You have mentioned John Henry. Do you say that Henry was not at work for Nichols, Shepard & Co. during the week of September 8th, 1880?

A. Not in those shops.

Cross-Q. 49. What was his department?

A. He used to be in my department or shop before I discharged him.

Cross-Q. 50. Was he in your department at that time?

A. No.

Cross-Q. 51. In whose was he, if you know?

A. I don't remember; he had worked in several places around the institution.

Cross-Q. 52. Do you recollect putting up or repairing some line shafting at about that time?

A. I do.

Cross-Q. 53. Can you tell the date or dates?

A. Between the 1st and 30th of that month. We were all the month at it.

867 Cross-Q. 54. In order to refresh your recollection I will ask you if you recollect about Rainbow's assisting or rather, perhaps, making some suggestions in the manner of putting up the scaffolding for the erection of the shafting?

A. No.

Cross-Q. 55. Do you recollect about Manby and Briggs coming to the shops and getting some pipe cut for use in a drive-well at about that time?

(Counsel for Nichols, Shepard & Co. objects to the question as being immaterial.)

A. Yes.

Cross-Q. 56. Do you recollect whether Rainbow was there on that occasion?

A. I do not; they were there so often.

Cross-Q. 57. Was Mr. Marsh there about that time?

(Counsel for Nichols, Shepard & Co. objects to the question as not proper cross-examination.)

A. He may have been around the premises, because he was around there all the time.

Cross-Q. 58. Well, do you recollect seeing him there during the fore part of September, 1880?

A. Yes.

Cross-Q. 59. Do you recollect seeing him on the 8th?

(Counsel for Nichols, Shepard & Co. objects to the question as not proper cross-examination.)

A. I do not.

Cross-Q. 60. After talking with Rainbow about this matter, when was the next time that you talked with any one about it?

A. I couldn't specify any time, it was so often.

Cross-Q. 61. You talked with Mr. E. C. Nichols about it, I presume?

(Counsel for Nichols, Shepard & Co. objects to the question as entirely immaterial.)

A. Yes.

Cross-Q. 62. And told him what you knew about it?

868 (Objection repeated by counsel for Nichols, Shepard & Co.)

A. Yes.

Cross-Q. 63. When was the first time that you did that, or about how long ago?

A. About a year ago, I should think.

Cross-Q. 64. Now, who or what first called your attention to the question of Rainbow's working at the shop in September, 1880? I suppose that at the time there was nothing in particular that would call it to your attention, no more than any other of the daily matters transpiring around the shop?

A. Through his own remark to other painters—that I wasn't here at the time—and their coming and telling me about it; that brought about the conversation with him about that question whether he worked here or not.

Cross-Q. 65. This is, you had heard that he had said so, if I understand you?

A. Yes.

Cross-Q. 66. You made an affidavit some time in last November, did you not, in this case, or about that time?

A. Some time; I couldn't say the date; if that is the date it must be so.

Cross-Q. 67. You know Frank W. Dunning, do you?

(Counsel for Nichols, Shepard & Co. (objects) as entirely immaterial.)

A. Yes, sir.

Cross-Q. 68. And that affidavit was sworn to before him as notary public?

(Objection renewed.)

A. Yes.

(Counsel for Marsh now offers certified copy of Thomson's affidavit, to be marked as "Andrew Thomson's No. 2," and offers the same in evidence as such exhibit.

Counsel for Marsh states that counsel for Nichols, Shepard & Co. refuses to allow the certified copy to be marked by the notary,
869 on the ground that it is his own private property, and he does not wish to be deprived of the use of it.

Counsel for Nichols, Shepard & Co. desires to state, in this connection, that the certified copy offered by Mr. Parker was loaned by him to Mr. Parker, when Mr. Parker suggested that he should like to have a copy to see. This paper was his own private property, and was attached to other papers under the same certificate; that Mr. Parker, after examining the same, offered it in evidence without making the request of counsel for Nichols, Shepard & Co. While he is perfectly willing such a certified copy should be filed, that he is not willing that counsel for Marsh should take his, counsel for Nichols, Shepard & Co.'s, private property to file in the case.

Counsel for Marsh states that during the cross-examination of this last witness he asked Mr. Mahon if he had the original affidavits filed on motion for reopening the case, inferring from the fact that he had produced one that he perhaps had the rest; that Mr. Mahon replied that he did not, but had certified copies; that thereupon they were handed to counsel for Marsh, and counsel for Marsh supposed they were present for any and all purposes for which the originals could be used; that no intimation was given him that such was not the case, and that they were the private property of Mr. Mahon, until after the copy of the Thomson affidavit was offered in evidence. Mr. Mahon did say, however, that he did not desire the same should go out of his custody, as he wanted to use it. Counsel for Marsh assented to that, simply requesting that the commissioner mark it for identification. He, however, accepts the assertion of Mr. Mahon, that the original, or certified copy, may be used on the hearing, and gives notice that he will ask to be allowed to read the original and consider the same in evidence on the hearing of this matter.

Counsel for Nichols, Shepard & Co. would state that when Mr. Parker asked if the copy of Thomson's affidavit was here he,
870 counsel for Nichols, Shepard & Co., stated to him, Mr. Parker, that he had one which he would lend him if it would be of any service, and he thinks, if for no other reason than the courtesy due to one counsel from another, that at least this would have prompted Mr. Parker to — asked his consent to use the paper, which he knew was not an original and must have been the private property of some one, and therefore not subject to Mr. Parker's demand. And counsel for Nichols, Shepard & Co. further objects to the reading of this paper on behalf of Marsh at the hearing unless a certified copy is now produced and marked.

Counsel for Marsh now offers paper marked by notary "Andrew Thomson No. 1" as a part of his cross-examination and as evidence in the case.

Counsel for Nichols, Shepard & Co. objects to the cross-examina-

tion of this witness, and to any papers or supposed papers offered in evidence by counsel for Marsh. Without waiving any rights under said objections, proceeds to re-examine the witness.)

Redirect examination of witness, ANDREW THOMSON, by counsel for Nichols, Shepard & Co.:

Redirect Q. 1. Had any work been done in the new shop prior to September 8th? What I mean is work on new machinery, such as is manufactured by the company.

A. No.

Q. 2. And up to that time, and until the shops started to work again, you with the other parties mentioned had worked in the other or old shop?

A. Yes.

Q. 3. Is it or not the business of the different foremen, when the shops shut down, to go to work and fix up their machinery in time for starting work again?

A. It is.

Q. 4. The Griffin you refer to stopped work when the shops shut down last year?

(Counsel for Marsh objects to the question as leading.)

871 A. Yes.

Q. 5. Did you or not take charge when he stopped work as foreman?

(Objection repeated by counsel for Marsh.)

A. It was understood so by I myself but not generally by the men.

Q. 6. If Rainbow had been at work at the portable forge would you or not, as foreman of the shop, been the one to have been most likely to have known of the fact?

A. I would.

Q. 7. When you say Mr. Hoag was assisting you at the time mentioned, namely, September 8th, 1880, was it as an assistant or as the general superintendent of the shops?

A. In both capacities.

Q. 8. Do you know whether or not during this period Mr. Hoag had a general supervision of the shops?

(Counsel for Marsh objects to the question as not being proper redirect.)

A. He did.

Recross-examination of witness, ANDREW THOMSON, by Mr. PARKER, counsel for Marsh:

Recross-Q. 1. Mr. Thomson, were your wages raised when you became foreman?

(Counsel for Nichols, Shepard & Co. objects to the question as entirely immaterial.)

A. No; not till a month later.

Recross-Q. 2. To what figure were they raised then?

(Objection repeated.)

A. Two dollars and a half ($2.50), I believe. I am not positively sure.

ANDREW THOMSON.

Taken, subscribed, and sworn to before me this 11th day of May, A. D. 1883.

EUGENE M. CONVERSE,
[SEAL.] *Notary Public.*

872 *James W. Wood.*

JAMES W. WOOD, produced as a witness on behalf of Nichols, Shepard & Co.

(Counsel for Marsh objects to the witness, James W. Wood, being sworn or examined in the case, as there has been no previous notice given of the taking — his deposition.)

Present: Alex. Mahon, Esq., counsel for Nichols, Shepard & Co., assignees, &c., and Mr. R. A. Parker, counsel for Marsh.

(Counsel for Nichols, Shepard & Co. states that he produced this witness at this time supposing there would be no objection. He will not examine him at this time, and as he expected, it being now half past four, that this witness would take at least an hour more to examine, he will not be able to produce a witness immediately, and will ask an adjournment, so that he can produce the other witnesses named in the notice, until nine o'clock to-morrow morning.

Counsel for Marsh states that he knows of no reason that he has given Mr. Mahon to suppose that he would not object to the taking of testimony of witnesses not named in the notice, and objects to an adjournment on the ground that the rest of the witnesses named in the notice are either employees or officers of Nichols, Shepard & Co. and within a few hundred feet of the place of taking this testimony.)

Edgar Ethridge.

EDGAR ETHRIDGE, produced as a witness and being first duly sworn, deposes and says, in answer to interrogatories proposed to him by ALEX. MAHON, Esq., counsel for Nichols, Shepard & Co., as follows, to wit:

Direct examination of EDGAR ETHRIDGE:

Direct Question 1. State your name, age, residence, and occupation.

873 Answer. Edgar Ethridge; thirty-four years of age; residence, Battle Creek, Mich., and occupation, a machinist.

Direct Q. 2. Are you in the employ of Nichols, Shepard & Co.?

A. I am.

Direct Q. 3. How long have you been employed by them?

A. Six years last February.

Direct Q. 4. In what shops are you employed?

A. In the engine shops.

Direct Q. 5. Were you or not working for them on the 8th day of September, 1880?

A. I was.

Direct Q. 6. Do you know or not whether Michael Rainbow was at work in that shop on that date, namely, September 8th, 1880?

A. He was not.

Direct Q. 7. Was the forge that he usually worked at located in that shop?

A. It was.

Direct Q. 8. Was he not at work on that day at any of the forges that were located in that shop?

A. He was not.

Cross-examination of witness, EDGAR ETHRIDGE, by Mr. PARKER, counsel for Marsh:

Cross-question 1. Paper shown witness, "Exhibit Andrew Thomson No. 1," and he asked if the wood-cut thereon is a fair representation of the works of Nichols, Shepard & Co. as they were in September, 1880.

(Counsel for Nichols, Shepard & Co. objects to any questions based on this paper, "Andrew Thomson No. 1.")

Answer. Yes; only shop marked "A. T. 1" was not quite so far completed, I think.

Cross-Q. 2. If you recognize the building you referred to in your testimony, please point it out.

A. The one marked "A. T. 1."

874 Cross-Q. 3. Is that the one you worked in on the 8th of September, 1880?

A. No, sir; it was not.

Cross-Q. 4. Then, which one was it?

A. The one marked "A. T. 2."

Cross-Q. 5. Are you positive that you worked for Nichols, Shepard & Co. during the week ending September 11th, 1880?

A. I am.

Cross-Q. 6. What were you doing that week?

A. Our main work was in taking down the line shafting in No. 2 shop.

Cross-Q. 7. Under whose direction?

A. The superintendent, A. J. Hoag.

Cross-Q. 8. Do you know whether or not your time was kept by any one during that week?

A. It was not.

Cross-Q. 9. Did you work full time that week?

A. I did.

Cross-Q. 10. Were you afterwards paid for it?

A. I was.

Cross-Q. 11. Who by?

A. George Barrows.

Cross-Q. 12. Were you in that shop all the time, then, on the 8th of September, 1880?

A. I was.

Cross-Q. 13. What particular circumstance, if any, enables you to fix the time as the eighth of September, 1880?

A. Because our first job after we shut down was to commence on the line shafting to cut a keyway in the same to connect on the line shafting in shop No. 1.

[On the margin: Thomson afterwards remembered all about the keyway, and swore he did on the day in question when the evidence was taken.]

Cross-Q. 14. Who else were to work there at that time?

A. You mean belonging to shop No. 2?

Cross-Q. 15. Who worked with you in fixing the line shafting on the 8th of September, 1880?

A. Andrew Thomson, our present foreman.

Cross-Q. 16. Any one else?

875 A. No, sir.

Cross-Q. 17. What was the reason your time wasn't kept that week?

A. Because we hadn't any foreman.

Cross-Q. 18. Was it kept the next week?

A. No, sir.

Cross-Q. 19. When was it first kept after that?

A. When we started up again.

Cross-Q. 20. When was your attention first called to this matter of Rainbow's working there?

A. Well, I couldn't just say. It was about eighteen months ago, as near as I can get at it.

Cross-Q. 21. That would be about a year after the time?

A. Yes, sir.

Cross-Q. 22. You mean to say, don't you, that Mr. Rainbow was not regularly at work?

A. I mean to say he was not at work at all.

Cross-Q. 23. Wasn't he in the shop that day?

A. No, sir.

Cross-Q. 25. Now, at that time there wasn't anything in particular to call your attention to his absence, was there?

A. No.

Cross-Q. 26. Then how can you be so certain he wasn't in the shop on a particular day two years and a half ago?

A. Because I was in the shop during the day, and am sure were he in the shop he would have talked with us.

Cross-Q. 27. You base, then, your reason upon the fact that he didn't talk with you, do you?

A. And also we had some very heavy lifting to do during that day. If he had been there we should have asked him to help us.

Cross-Q. 28. At what part of the shop was this lifting?

A. The north part—the part toward shop marked "A. T. 1."

Cross-Q. 29. About how long is that shop?

A. I couldn't say just the length of it; about seventy feet, I should think.

876 Cross-Q. 30. How long were you engaged in the lifting?

A. About two days.

Cross-Q. 31. All the time?

A. No; we wouldn't be lifting all the time.

Cross-Q. 32. How long was Mr. Hoag there with you on the 8th of September, 1880?

A. I don't think Mr. Hoag was with us to exceed five to ten minutes at a time.

Cross-Q. 33. Were you at work between the shops or inside on that day?

A. Inside.

Cross-Q. 34. Now, do you recollect, on the 8th of September, 1880, of any one else besides Thomson and Hoag being in that shop; and, if so, who were they and what did they do?

A. No, sir; I don't remember.

Cross-Q. 35. Would you say whether there were or were not any one else in the shop on that day?

A. I have no reason to say that there was any one else in there on that day. I couldn't say that there was any one else.

Cross-Q. 36. Can you say there was not any one else?

A. No.

Adjournment taken until May 12th, 1883, at 9 o'clock a. m., at the office of Nichols, Shepard & Co., in Battle Creek, Michigan, for the taking of further testimony in this matter.

E. M. CONVERSE,
Notary Public.

May 11, 1883.

At the office of Nichols, Shepard & Co., in the city of Battle Creek, Michigan, the taking of depositions resumed May 12th, 1883, at 9 o'clock a. m.

Present: Counsel for respective parties.

Cross-examination of witness, EDGAR ETHRIDGE, continued by Mr. PARKER, counsel for Marsh:

877 Cross-Q. 37. Do you recollect the day of the month or the day of the week that you commenced work on that line shafting?

(Counsel for Nichols, Shepard & Co. objects to the question as entirely irrelevant, immaterial, and not proper cross-examination.)

A. We commenced the line shafting on Monday, the 5th of September, 1880.

Cross-Q. 38. And what was the first thing you did to it?

(Objection repeated.)

A. We erected the scaffolding.

Cross-Q. 39. How long did that take?

(Objection repeated.)

A. I couldn't say just exactly how long; it didn't take but a little while. There was nothing to it; probably about half a day.

Cross-Q. 40. When you say about a half a day do you state from memory what occurred or from about what you think it would take to do that piece of work?

(Objection repeated.)

A. Yes, sir; from about what occurred afterwards.

Cross-Q. 41. What did you do next?

(Objection repeated.)

A. Getting ready to cut a key-seat in the line shafting.

Cross-Q. 42. How long did that take?

A. I believe I couldn't state positively. I believe that Mr. Thomson worked on that nearly a day and a half. I was assisting him on the same.

Cross-Q. 43. What next did you do?

(Objection repeated.)

A. We were taking down the line shafting.

Cross-Q. 44. How long did that take?

A. I couldn't state how long.

Cross-Q. 45. About how long, as you remember?

(Objection repeated.)

A. I couldn't state the time, because our work laid on the same for two weeks.

Cross-Q. 46. Did it take the balance of the week?

878 (Objection repeated.)

A. I couldn't say whether it did or not.

Cross-Q. 47. Do you know Willet Briggs and Robert Manby?

(Objection repeated.)

A. I do.

Cross-Q. 48. Do you recollect Briggs and Manby coming to that shop to cut some pipe during that week?

(Objection repeated.)

(By consent of counsel for Marsh, that the objection that the examination is not proper cross-examination may be made general, so as to save its repetition at each question.)

A. No; I don't remember them.

Cross-Q. 49. You wouldn't say, then, that they didn't, if I understand you?

A. I haven't any recollection of their being there.

Cross-Q. 50. Question repeated.

A. No; I couldn't say they didn't, but had they been there I ought to have seen them.

Cross-Q. 51. All together, do you know how long it took to put up that shafting job?

A. I do not.

Cross-Q. 52. Do you know what you did the next week?

A. No; I couldn't state; work on shafting was our work; I done one job that I recollect well; that was to plane a set of brasses for the connecting rod of the big stationary engine, by hand.

Cross-Q. 53. Can you tell what day of the month that was?

A. No; I could not.

Cross-Q. 54. Or the day of the week?

A. It was somewhere about the middle of the week.

Cross-Q. 55. Was there any other man by the name of Ethridge at work in the shops of Nichols, Shepard & Co. during the week of September 8th, 1880, besides yourself?

A. I don't know of any.

Cross-Q. 56. There was none other, then, in the machine shop? You know whether there was or not there?

879 A. No; there was none.

Cross-Q. 57. Who first called your attention to the question of whether Rainbow was at work there in that week or the 8th of September?

(Counsel for Nichols, Shepard & Co. objects to the question, further as entirely irrelevant and immaterial.)

A. De Forest Gilbert.

Cross-Q. 58. Who is he? What is his business?

A. Employee of Nichols, Shepard & Co., in the same shop with me. No. 2 is the number of the shop.

Cross-Q. 59. Well, what was said about it?

A. He told me that Michael Rainbow had sworn that he forged the stop, and asked me if I remembered of him being there at work.

Cross-Q. 60. Where was this?

A. In the shop No. 2.

Cross-Q. 61. And when?

A. About 18 months ago.

Cross-Q. 62. Have you talked with Mr. Nichols or any of the officers of Nichols, Shepard & Co. about that?

(Counsel for Nichols, Shepard & Co. objects to the question as entirely irrelevant and immaterial.)

A. No, sir.

Cross-Q. 63. Now, haven't you talked with Mr. E. C. Nichols about that up to the 1st of December last year?

A. Before that?

Cross-Q. 64. Yes; before the 1st of December of last year.

A. No, sir.

Cross-Q. 65. Hadn't you talked with any one before that besides the one you have mentioned?

A. Well, it was the general talk in the shop. Probably I might have talked with some of the men.

Cross-Q. 66. There was a good deal of controversy about it, wasn't there?

A. No; I should think not.

Cross-Q. 67. You made an affidavit in this matter, did you not?

880 A. I did.

Cross-Q. 68. There has been a good deal of talk in the shop among the men, &c., about this reverse gear and stop plate, how it was made and who made it, &c., for the past eighteen months?

A. No; I don't think there has.

Cross-Q. 69. Hasn't it excited any interest?

A. Not to my knowledge.

Cross-Q. 70. When the shops are shut down the brick or permanent forges in the shop couldn't be operated, could they?

A. They could not.

Cross-Q. 71. Where did Barrows pay you for that week's work—that is, the week of September 8, 1880?

A. I couldn't say.

Cross-Q. 72. Nor when?

A. I couldn't say when.

(On reading over witness' deposition he wishes to correct his answer to Cross-Q. No. 8. Question and his answer read to witness and he states "that George Barrows did take our time. That is all."

(Counsel for Marsh desires to ask further questions on this point.)

Cross-Q. 73. Has your attention been called to that matter since yesterday afternoon; and, if so, by whom?

(Counsel for Nichols, Shepard & Co. objects to the question as entirely irrelevant and immaterial.)

A. No, sir; it has not.

Cross-Q. 74. How did he keep the time, if you know?

A. By the week.

Cross-Q. 75. Do you know whether he kept a time-roll or not of your time for that week?

A. I couldn't say positively.

Cross-Q. 76. To the best of your recollection?

A. No; I couldn't say whether he did or not. I couldn't get my money unless he did take my time.

EDGAR ETHERIDGE.

881 Subscribed and sworn to before me this 12th day of May, A. D. 1883.

EUGENE M. CONVERSE,

[SEAL.] *Notary Public.*

GEORGE F. BARROWS, produced as a witness on behalf of Nichols, Shepard & Co., and being duly sworn, does depose and say, in answer to interrogatories proposed to him by ALEX. MAHON, Esq., counsel for Nichols, Shepard & Co., as follows, to wit:

Direct Question 1. State your name, age, residence, and occupation.

Answer. George F. Barrows; twenty-six years of age; residence, Battle Creek, Michigan; occupation, time-keeper and paymaster of Nichols, Shepard & Co.

Direct Q. 2. As such time-keeper and paymaster what books do you keep, if any?

A. The labor record and labor ledger.

Direct Q. 3. Do you as such time-keeper and paymaster make any other entries in any other book?

A. I do; in the daily cash book.

Direct Q. 4. What does that daily cash book contain? I mean what items are entered there?

A. All cash transactions.

Direct Q. 5. Is that a book of original entries?

A. It is.

Direct Q. 6. Does any one else make entries in that book except yourself?

A. Yes, sir.

Direct Q. 7. Do you or not have exclusive control of the labor record and labor ledger before referred to?

A. I do.

Direct Q. 8. Please state how those books are kept and the manner of making entries therein.

882 A. I didn't understand the question.

Direct Q. 9. I mean how you take the time of the laborers, and how you keep their accounts.

(Counsel for Marsh objects to the question as not surrebutting.)

A. The time is taken on time-slips, and from them transferred to the labor record.

Direct Q. 10. How are the entries made in that labor record and ledger? I mean the system employed.

A. I don't understand the question.

Direct Q. 11. How do you make your entries in those books, is what I mean, and what do they show?

A. They show the correctness of a man's time, the amount he earns, and the amount he is paid.

Direct Q. 12. What entries are made in the labor record?

A. The original entries.

Direct Q. 13. What of?

A. Time.

Direct Q. 14. What does the labor ledger show, or how are the accounts kept in that?

A. It shows the amount earned and amount paid and the credit or debit of a man's account, as the case may be.

Direct Q. 15. Is the labor record a book of original entries?

A. It is.

Direct Q. 16. How long have you been keeping such books for Nichols, Shepard & Co.?

A. Since the 12th day of March, 1877.

Direct Q. 17. Please examine the books now shown you, being "Hoag's Exhibits Franklin T. Roberts Nos. 3 and 4," and state what they are.

A. No. 3 is the labor record, or sometimes called the time-rolls. No. 4 is the labor ledger.

Direct Q. 18. Do they contain the accounts of the labor for the year 1880?

A. They do.

(Counsel for Nichols, Shepard & Co. at this time formally
883 offers these two books in evidence, namely, "Hoag's Exhibit Franklin T. Roberts No. 3" and "Hoag's Exhibit Franklin T. Roberts No. 4," having previously offered them at the request of counsel for Marsh, as will appear from the record; and he gives notice that he shall introduce further testimony to establish the correctness of the accounts kept by Nichols, Shepard & Co.

Counsel for Marsh states that he never requested the offering of any of these books in evidence and renews his former objections to such introduction, and further objects on the present state of the testimony that it is not shown that said books were correctly kept or correctly transcribed, and, further, for the reason that it appears from the testimony of this witness that they are not books of original entries.)

Direct Q. 19. Did you make the entries in these books for the year 1880?

A. I did.

Direct Q. 20. Can you tell from those books the different men employed by Nichols, Shepard & Co. during the months of July, August, September, and October, 1880?

A. I can.

Direct Q. 21. How do you get the items that you enter in those books?

A. When the shops are running I get them from each foreman of the several different departments, and when the shops are not running I get them myself.

Direct Q. 22. Were the shops shut down at any time during the period above mentioned or not?

A. They were.

Direct Q. 23. During what time in 1880 were they shut down?

A. Witness refers to book "Hoag's Exhibit Franklin T. Roberts No. 3" and says: From the 4th day of September until the 4th day of October.

Direct Q. 24. Was this the usual time of the year for shutting down or suspending work?

A. It is.

884 Direct Q. 25. You state that during the time the shops are shut down that you take the time yourself of the workmen. How do you take this time and how are they paid by you?

A. Sometimes taken on time-slips and sometimes from the men employed. They are sometimes paid in the regular way and sometimes from the cash drawer.

Direct Q. 26. Do these time-slips show anything except the time made by the men?

(Counsel for Marsh objects to the question, as the time-slips will show best for themselves what they contain and are the best evidence.)

A. I think there is one or two of them on which the amounts earned is carried out; otherwise they do not.

Direct Q. 27. Please examine book now shown you, "Hoag's Exhibit Franklin T. Roberts No. 1," and state, if you know, what it is.

A. It is the daily cash book or daily blotter.

Direct Q. 28. Do you or not make the entries in these three (3) books of all the cash paid or received by you, or did you during the period before stated—*i. e.*, the months of July, August, September, and October, 1880?

A. I did or I do.

Direct Q. 29. Did you make all the entries in the book now shown you, "Franklin T. Roberts No. 1?" I mean all the entries in that book and whether they are made in your handwriting.

A. I did not.

Direct Q. 30. Do you enter or does any one else make the original cash payments in any or all of these three books?

A. I make the entries in "Hoag's Exhibits Franklin T. Roberts Nos. 3 and 4," but not all of them in No. 1.

Direct Q. 31. Is it necessary that one or all of these books should contain the original entry of any cash paid or received by Nichols, Shepard & Co.?

A. It is necessary that No. 1 should contain all the cash transactions.

885 Direct Q. 32. Do you enter in that book No. 1 each separate cash transaction of the different workmen; or, if not, how is it entered?

A. All cash paid to workmen from the cash drawer is entered in book No. 1, and other entries are made in books No. 3 and No. 4. I wish to correct that answer, please. I wish to add, in book No. 1, and transferred to books Nos. 3 and 4, unless it be for work done in building a new shop, when it is charged in book No. 1 to the account of factory buildings and grounds proper.

Direct Q. 33. Please examine paper or papers, "Hoag's Exhibit Franklin T. Roberts No. 5," and tell me if you know what it is.

(Same handed witness and he examining the same.)

A. It is the time-slips of the employees employed by Nichols, Shepard & Co. from July 15th to October 1st, 1880.

Direct Q. 34. Did you or not, during the time that the shops were shut down, keep any of these time-slips, and can you identify the ones that you did keep, if any?

A. I did, and can identify them.

Direct Q. 35. Please examine the same and paper marked "Hoag's Exhibit Franklin T. Roberts No. 5," before referred to, and designate by the number which you will find made by the notary at the bottom of each slip the ones you did keep.

A. Nos. 1, 1½, Nos. 3, 4, 6, 11; that is all.

Direct Q. 36. During what period were those kept by you?

A. During the period from September 4th to October 4th.

Direct Q. 37. Do they show the time made by all the workmen during that period?

A. They do not.

Direct Q. 38. Are there any others there which show those which are not included in those above referred to by you?

A. I don't exactly understand the question.

Direct Q. 39. Do those time-slips show the names and time of all the workmen employed by Nichols, Shepard & Co. between September 4th and October 4th, 1880?

886 A. They do not.

Direct Q. 40. Where would any other time be shown?

A. On "Hoag's Exhibit Franklin T. Roberts No. 3."

Direct Q. 41. In any other place?

A. No, sir.

Direct Q. 42. Now, please examine time-slips, referring to them by number, and tell me which embrace the time made by the workmen during that month; and also examine the book, "Hoag's Exhibit Franklin T. Roberts No. 3," referring to the same by the page or pages, so as to include all the workmen employed during that time, if they are all embraced in those two papers or books.

A. Time-slips Nos. 16, 15, 14, 13, 12, 11, 10, 9, 8, 7, 6, 5, 4, 3, 2, 1, 1½; in "Hoag's Exhibit Franklin T. Roberts No. 3," pages 307, 308, 309, 310, 311, 312, 313, and 314.

By consent an adjournment taken to 2 o'clock p. m. May 12th, 1883, at the office of Nichols, Shepard & Co., for the taking of further depositions.

E. M. CONVERSE,
Notary Public.

At the office of Nichols, Shepard & Co., in the city of Battle Creek, Michigan, May 12th, 1883, at 2 o'clock p. m., taking of depositions resumed.

Direct examination of GEORGE F. BARROWS, witness, continued by ALEX. MAHON, Esq., counsel for Nichols, Shepard & Co.:

Direct Q. 43. Do these slips and the pages referred to in the "Exhibit Franklin T. Roberts No. 3" contain the names of all workmen employed by Nichols, Shepard & Co. in the month before mentioned or during the time the shops were shut down?

A. They do.

Direct Q. 44. Did you pay all the workmen during that time yourself?

A. With the exceptions of about three days, between the
887 11th and 18th. It doesn't include all that time, but it is a few days between those dates, which time I was absent from the works.

Direct Q. 45. Do the foremen of some of the shops keep time-slips during the time the works are shut down or do you keep them all?

A. If there is any foremen present they keep their own time-slips; if not, I keep the time. I would correct by saying that if any foreman is at work he keeps time-slips.

Direct Q. 46. Suppose you were to pay any workman and did not enter the same on the books, and as a consequence you were short in your cash, whose loss would it be?

A. It would be my own loss.

Direct Q. 47. Have you at any time during your employment by Shepard, Nichols and Co. been short in your account of cash?

(Counsel for Marsh objects to the question as immaterial.)

A. I would like to ask if you mean the cash account proper or the cash and labor account.

Direct Q. 48. I mean the cash and labor account.

A. I don't remember as I ever have.

Direct Q. 49. Did you ever pay any workmen out of your own pocket? I mean your own money.

A. No, sir.

Direct Q. 50. Do you know from your own knowledge, independent of the books, whether Michael Rainbow was at work at any time when the shops were shut down in 1880?

A. To the best of my recollection he came here on the 30th day of September and commenced a little job.

Direct Q. 51. What was that?

A. It was ironing two (2) new forges in the new engine shop, just completed.

Direct Q. 52. Do you know of your own knowledge whether he had worked any other time in that month?

A. I don't think he did—at least there was no time allowed him for any other work except ironing the forges.

888 Direct Q. 53. That work was done, you say, the 30th of September, 1880, or after that time?

(Counsel for Marsh objects to the question as leading.)

A. Yes, sir.

Direct Q. 54. Do you know whether or not, from your own knowledge, John M. Henry worked for Nichols, Shepard & Co. during the month of September, 1880—during the time the shops were shut down?

A. John Henry had six (6) days' time the week ending September 4th. After that no time was allowed him for work done in September.

Direct Q. 55. Was any time allowed him after that time for any work?

A. Yes, sir.

Direct Q. 56. How much time?

A. Three days.

Direct Q. 57. Do you know when this work was performed by him? Give the date as near as you can; this extra work. I mean the three days' time above referred to.

A. I cannot give any date, but from the best of my recollection it was in the latter part of July.

Direct Q. 58. What makes you think it was for work done in the latter part of July?

A. I would say that at that time, if my memory serves me right, they were sawing wood, either here on this wood yard on Marshall street or back of or alongside of the warehouse.

Direct Q. 59. Are you sure that this time was not for work done by him during the first fifteen days of September, 1880?

A. I am.

Direct Q. 60. Do you know whether Edgar Ethridge was at work for Nichols, Shepard & Co. during the month of September, 1880?

(Counsel for Marsh objects to the question as not surrebuttal.)

889 A. I would say that he was at work the most of the month.

Direct Q. 61. Now, referring to the books and time-slips, do you find any time allowed Michael Rainbow during that month, September, 1880?

(Counsel for Marsh objects to the question on ground that he has already testified on that point, and, further, that it does not appear that the time-slips referred to are a correct record of all the work done for said corporation by its workmen during that month.)

A. I do not.

Direct Q. 62. Please examine the labor record, "Hoag's Exhibit Franklin T. Roberts No. 3," and tell me if you find the name of Michael Rainbow entered thereon as having received any pay for the first fifteen days of September, 1880.

(Counsel for Marsh objects to question as not competent evidence; that the exhibit is the best evidence of its contents; 2d, it is not competent, as it only proves lack of payment, and it is not surrebutting.)

A. I do not.

Direct Q. 63. Did you as paymaster pay him any money during the first fifteen days of September for any work done by him?

(Counsel for Marsh objects to the question as not surrebuttal.)

A. I did not.

Direct Q. 64. Did you pay him any money during that time from your own personal funds?

(Objection repeated.)

A. I did not.

Direct Q. 65. Do you know whether or not he did any work for Nichols, Shepard — Co. the first fifteen days of September, 1880?

(Counsel for Marsh objects to the question, as witness has already testified on that point.)

890 A. I no not think he did. No time was allowed and no money paid him.

Direct Q. 66. Please examine "Hoag's Exhibit Franklin T. Roberts No. 3" and see if you find the name of Rainbow entered there.

(Counsel for Marsh objects to question as not competent; the exhibit is the best evidence, and it is not rebutting.)

A. I do; in the week ending Saturday, September 11th.

Direct Q. 67. What does that entry show?

(Objection repeated.)

A. I don't exactly understand the question.

Direct Q. 68. Why is his name entered there, then, if he did no work or received no payment in that week?

[On the margin: Books show no payment of that balance at any time afterward.]

A. Because there was a balance due him from the firm, which I expected he would call for that is all.

Direct Q. 69. Was that amount due for work done by him prior to September 1st, 1880?

A. It was.

Direct Q. 70. Do you find on this book, "Franklin T. Roberts No. 3," any time or payments made to John M. Henry during the first fifteen days of September, 1880?

(Objection by counsel for Marsh to question as incompetent.)

A. I do. September 4th, 1880, he was paid nine dollars, on page 309, for six (6) days work, at one dollar, and also, September 11th, page 311, four dollars and fifty cents for overwork, as previously stated.

Direct Q. 71. Do you know that that overwork was done or not prior to September 1st, 1880?

A. To the best of my knowledge I do.

Direct Q. 72. Please examine time-slip numbered 8 of "Franklin T. Roberts No. 5" and explain, if you can, the entries carried out opposite the name "Ethridge?"

(Counsel for Marsh objects to the question for the reasons, 1st, that it does not appear that witness ever made the time-slip referred to; 2d, the same is not dated; 3d, that it is irrelevant and in-
891 competent; 4th, it is not surrebutting.)

A. It would show on the face of that time-slip that Mr. Ethridge had some time due him from the previous week, being marked here six (6) days to Friday night.

Direct Q. 73. Did you make any entry or is there any entry at all on that slip No. 8 made by you?

(Objection repeated.)

A. No, sir.

Direct Q. 74. Do you know for what week or weeks that time-slip is for?

(Same objection.)

A. To the best of my recollection, that is for the week ending Saturday, September the 18th, 1880.

Direct Q. 75. Can you positively state whether that slip was made out during the times the shop was shut down in 1880?

(Objection repeated.)

A. Yes, sir; I can.

Direct Q. 76. Do you know in whose handwriting that slip is?

(Objection repeated.)

A. Yes, sir.

Direct Q. 77. Whose is it?

A. Charles H. Hicks.

Direct Q. 78. Will you state positively that either one of these four exhibits, "Franklin T. Roberts Nos. 1, 3, 4, and 5," show all payments made to laborers during the month of September, 1880?

(Counsel for Marsh objects to question as incompetent and not surrebuttal.)

A. I will; I do.

Direct Q. 79. State whether the entries made in the books, "Exhibits 3 and 4 Franklin T. Roberts," were made by you at the time they purport to be, and whether you intended to make the entries, and if you now believe them to be correct.

892 (Counsel for Marsh objects to question as leading.)

A. I intended them to be correct at the time and believe they are now.

Direct Q. 80. Were they made by you at the time they purport to be?

A. They were.

Direct Q. 81. Please refer to "Labor Ledger, Franklin T. Roberts No. 4," page 303, and tell me, if you can, what the entry opposite October 11th is or means.

(Counsel for Marsh objects to question as incompetent; the book is the best evidence.)

A. It is for 86 hours' labor performed, and means that there was thirty-two hours' overtime credited to him that week.

Direct Q. 82. Do you know from your own personal knowledge when and how this extra time was made by Mr. Rainbow?

A. It was made between the 30th day of September and the 4th day of October, and was for work performed by him in ironing the two new forges placed in the boiler shop in September, 1880.

(Counsel for Marsh moves to strike out the answer as not responsive and as evasive.)

Direct Q. 83. Have you any reason for knowing that this extra time was made by him between the 30th day of September and the 4th day of October?

A. My reasons for knowing this are that the boiler shop was not completed until the latter part of September.

(Same objection, and motion to strike out by counsel for Marsh.)

Direct Q. 84. Do you go around the shops or not during the working hours, or is your principal business in the office?

A. It has always been my custom to go through the shops at least once a day and sometimes twice.

Direct Q. 85. Do you or not go oftener when the shops are shut down.

893 A. No, sir. I would say right here that while the shops are shut down I always make it a practice to go twice a day—in the forenoon and afternoon.

Direct Q. 86. What is the reason for this, if any?

A. When the shops are shut down I go through to see what men are at work.

Direct Q. 87. Under those circumstances you would be very likely to know who was at work in the shops when they were shut down in September, 1880?

(Counsel for Marsh objects to question as leading.)

A. Quite likely.

Cross-examination of witness, GEORGE F. BARROWS, by Mr. PARKER, counsel for Marsh:

Cross-question 1. Mr. Barrows, are these time-rolls, "Exhibit Franklin T. Roberts No. 5," an absolutely correct record of all the labor performed for Nichols, Shepard & Co. during the period of July, August, and September, 1880?

(Counsel for Nichols, Shepard & Co. objects to question as being misleading and having been already answered by the witness.)

A. They are not.

Cross-Q. 2. Do you say that they are absolutely correct so far as they go?

A. No, sir.

Cross-Q. 3. Is this exhibit, "Franklin T. Roberts No. 3," absolutely correct as to the labor performed and the prices paid therefor by each man named herein during July, August, September, and October, 1880?

A. They were intended to be correct at the time the entries were made, and I believe them to be so now.

Cross-Q. 4. Why do you believe it?

A. Because I don't know of any changes having been made since the original entries were entered therein.

Cross-Q. 5. Why did you believe it was correct then?

A. Because it balances.

894 Cross-Q. 6. Is that the only reason?

A. And the entries made therein transferred to each man's account in the ledger were proven to be correct at the end of each respective month.

Cross-Q. 7. How?

A. By a trial balance.

Cross-Q. 8. Well, is that the only other reason?

A. And, further, that the men so paid from the labor record were perfectly satisfied and found the amounts paid them correct.

Cross-Q. 9. Did you see any of that work done that these books represent at that time?

A. I did.

Cross-Q. 10. Did you see it all done?

A. No, sir.

Cross-Q. 11. Then you can't swear of your own knowledge that the work represented to be done by those books was all actually done?

A. I cannot.

Cross-Q. 12. And can you swear of your own knowledge that no more work was done than is represented by those books?

A. I cannot.

Cross-Q. 13. Now will you just turn to the books, these exhibits, and point out where in July there is any record that John Henry performed the three (3) days of extra labor, as you have testified?

A. There is no record made of it except in "Hoag's Exhibit Franklin T. Roberts No. 3," on page 311, date Saturday, September 11th, where John Henry has credit with (3) three days' time.

Cross-Q. 14. That is the entry you have already testified to, is it?

A. Yes, sir.

Cross-Q. 15. Did it ever happen before or since this particular instance that a man worked three days and it was six weeks before the time was put on the books?

895 A. I don't think it ever has.

Cross-Q. 16. Are you sure that that time of three (3) days for John Henry was in the latter part of July, 1880?

A. To the best of my recollection, it was.

Cross-Q. 17. Are you sure it was not counted twice, and that he was not paid twice for it?

A. Yes, sir.

Cross-Q. 18. Referring to page 346 of "Exhibit Franklin T. Roberts No. 4" and to John Henry's account of 1880 for July, will you be good enough to point out, if that record is true, where he could have got in three extra days of work in that month sawing wood?

A. In answer to that question, I would say that this extra time referred to was performed by John Henry, as he claimed, between the hours of 4 o'clock in the morning and seven in getting the engine ready, fired up, and agoing, that they might commence work sawing wood promptly when the whistle blew.

Cross-Q. 19. Then, why wasn't it put into that record?

A. Because there was a dispute between Mr. Hoag, the superintendent, and Mr. Henry in regard to the amount of time should be allowed for such service.

Cross-Q. 20. Then disputes sometimes occur as to a man's time, do they?

A. Sometimes, but not very often.

Cross-Q. 21. About how often?

A. I don't know as I could cite any other instance from my recollection.

Cross-Q. 22. Now, the books don't show anything of this extra time of Henry's, do they, as you have testified?

A. September 11th it shows on the books.

Cross-Q. 23. It shows that the work was done in that week, doesn't it?

A. No, sir; not necessarily.

Cross-Q. 24. Will you please read to the commissioner from "Exhibit Franklin T. Roberts No. 3," page 310, the heading to that page?

896 A. "Labor record for the week ending Saturday, September 11, 1880."

Cross-Q. 25. Now, will you please read the same from page 311?

A. "Labor record for the week ending Saturday, September 11th, 1880."

Cross-Q. 26. These pages are divided into columns headed time, price, total, workmen, folio, state of account, and payments. Now, will you please read Mr. Henry's account on that page?

A. Three days' time, $1.50 per day, $4.50; Henry paid $4.50. I would further state——

(Counsel for Marsh objects to any further statement on the part of witness as not responsive and not the proper time for explanations.)

Cross-Q. 27. Now, is there anything in this account of Henry's to indicate that this three days' work was not done during the week ending Saturday, September 11th, 1880; if so, what?

A. In the first place, if Mr. Henry had been here to work on Saturday, September 11th, he would have got his pay in the regular form of payments for labor; in the second place, this $4.50 was transferred from the cash book, "Exhibit Franklin T. Roberts No. 1," under the date of Thursday, September the 9th, and I further know, of my own knowledge, that it was not for work performed that week.

(Counsel for Marsh objects, and will move to strike out all witness states to be of his own knowledge as not responsive to the question.)

Cross-Q. 28. Now, referring to "Exhibit Franklin T. Roberts No. 4," page 346, and to the account of John Henry for 1880, for September, will you point out what there is in that account to indicate that the labor there indicated, as credited, was not performed between the 4th and 11th of September?

A. There is nothing there to indicate but what it was.

897 Cross-Q. 30. Now, Mr. Barrows, will you point out in this "Exhibit Franklin T. Roberts No. 5" any record, if any, in those time-rolls of that three days' work performed by John Henry?

A. No record shown of any time for John Henry for the week ending September 11th.

Cross-Q. 31. Question repeated, and this addition: If there is any record of those three days' work anywhere in those time-rolls, time-slips, please find and point it out, in July or any other time.

A. There is no record on the time-slips of the three days' extra time allowed to Mr. Henry.

Cross-Q. 32. Now, if there is any record of it, other than has already

been pointed out, existing in any of these "Exhibits Franklin T. Roberts Nos. 1, 3, 4, and 5" please point it out—*i. e.*, if these books show anywhere else any record of those three days' work other than those already pointed out.

A. I will say that there is no record of the transaction, except as it appears on Nos. 1, 3, and 4.

Cross-Q. 33. How often at that time did you pay workmen regularly?

A. Once a week, on Saturdays.

Cross-Q. 34. If a man was paid regularly on Saturday with the rest it would go with the labor account, would it not, on the cash book?

A. It would; yes, sir.

Cross-Q. 35. If a workman was paid on any other day a separate item would be made of the payment on the cash book and charged to the workman specially, would it not?

A. I would like a further explanation on that question.

Cross-Q. 36. Question repeated. I mean on the day of payment?

A. No, sir; not charged on the day of payment.

Cross-Q. 37. Where would you keep any record, then, of the actual date of payment?

A. Keep it on the cash book until the end of the week, when it is charged to them on the labor record.

Cross-Q. 38. Did you ever make a mistake and not give a
898 man credit for work that he had actually performed?

A. I don't remember as I ever have.

Cross-Q. 39. Did you ever pay a man for work and charge him with it and not make an entry of it?

A. No, sir.

Cross-Q. 40. You are positive about these last two answers, are you?

A. Yes, sir.

Cross-Q. 41. If one of Nichols, Shepard & Co.'s workmen should take the stand here and swear that they had worked here during a whole week, and that you paid him for it, and no corresponding entry was made of it in these exhibits, don't you think you might be mistaken?

[On the margin: See either 28 ac.]

(Counsel for Nichols, Shepard & Co. objects to the question as not proper cross-examination, and, further, calls for a statement from the witness or conclusion of facts which have not existed and may never exist.)

A. No, sir.

Cross-Q. 42. During the month of September, 1880, how many men by the name of Ethridge were there to work for Nichols, Shepard & Co.?

A. One.

Cross-Q. 43. Now, referring to this "Exhibit Franklin T. Roberts No. 5," will you see if you can find any record on those time-rolls of

any work having been performed by Ethridge during the week ending September 11th, 1880?

A. I find on the roll No. 8, for the week ending Saturday, September 18, 1880, that up to Friday night Mr. Ethridge had credit with six (6) days' time, which would show that some of the work must have been performed in the week ending Saturday, September 11th, 1880.

Cross-Q. 44. Will you point out the date on that time-roll?

A. I cannot point out any date, but it can be identified by referring to labor record of that week.

899 Cross-Q. 45. Will you refer to the labor record for that week and find his account?

A. I will.

Cross-Q. 46. Please read it.

A. On page 312 I find: Time, six days; price, $2.25 per day; total, $13.50; Ethridge; folio 298, paid $13.50.

Cross-Q. 47. Now, will you refer to the labor record for the preceding week, ending September 11th, 1880, and find Mr. Ethridge's account and read it?

A. No time; price, $2.25; no total; Ethridge; folio 298, no payment.

Cross-Q. 48. From that you would say that you paid him no money that week, would you not?

A. I would.

Cross-Q. 49. Now, will you refer to Mr. Ethridge's account in "Franklin T. Roberts No. 4," folio 298, and will you read the time he is credited with by weeks in September, 1880, and also the amount of payments he is charged with?

A. September 4th—week ending September 4th—by six (6) days' labor, page 309, $13.50; payment week ending September 4th, to cash, page 309, $8.50; for the week ending September 18th, by (6) six days' labor, page 312, $13.50; payment week ending September 18th, to cash, page 312, $13.50; week ending September 25th, by 57 hours' (or $5\frac{7}{10}$ days) labor, page 313, $12.82; payment week ending September 25th, to cash, page 313, $12.82; payment week ending September 30th, to cash, page 314, $100.00; week ending October 2d, by six days' labor, page 315, $13.50; payment week ending October 2d, to cash, page 315, $13.50.

Cross-Q. 50. Referring to "Exhibit Franklin T. Roberts No. 5," the time-rolls, I will ask you if you can find any time-rolls for any other or further time for Mr. Ethridge during that month, save the one, No. 8, already pointed out.

A. Time-roll No. 12, week ending Saturday, September 4th, Ethridge, 6 days' time; No. 1½, week ending October 2d, Ethridge, six days' time; that is all I find.

The taking of further depositions in this matter adjourned
900 until Monday, May 14th, 1883, at 9 o'clock, a. m., at the office of Nichols, Shepard & Co., in Battle Creek, Mich.

E. M. CONVERSE,
Notary Public.

May 12th, 1883.

At the office of Nichols, Shepard & Co., Monday, May 14th, 1883, at 9 o'clock a. m., the taking of depositions resumed in pursuance of adjournment had May 12th, 1883.

Present: Alex. Mahon, Esq., counsel for Nichols, Shepard & Co., assignees, &c.; and R. C. Parker, Esq., and Martin Metcalf, Esq., counsel for Marsh.

Cross-examination of witness, GEORGE F. BARROWS, continued by Mr. PARKER, counsel for Marsh:

Cross-Q. 51. Do you find anything in these time-rolls to indicate that that work was done on the week ending September 11th, 1880?

A. I do; that is a portion of the work.

Cross-Q. 52. You do not find the time-roll dated, do you?

A. I do not.

Cross-Q. 53. How much of the time do you find indicated for the week ending September 11th?

A. At least one day.

Cross-Q. 54. Now, in the Exhibits "Franklin T. Roberts Nos. 3 and 4," why didn't you make entries to correspond with that time-roll?

A. 54. I would ask what time-roll you refer to?

Cross-Q. 55. The one that indicates that Ethridge worked at least one day during the week ending September 11th.

A. Because he only having a little time that week it was probably carried forward into the next week, showing that between the 4th day of September and the 18th Mr. Ethridge put in six (6) days' time.

Cross-Q. 56. Now, do you say that from the exhibits and
901 from your recollection that Mr. Ethridge did not work but one (1) day during the week ending September 11th, 1880?

A. I do not say that.

Cross-Q. 57. Do you say that he worked more than one (1) day during that week?

A. No, sir.

Cross-Q. 58. Now, Exhibits "Franklin T. Roberts Nos. 3 and 4" do not correctly represent Mr. Ethridge's account, do they?

A. Yes, sir.

Cross-Q. 59. Then he didn't work during the week ending September 11th, did he?

A. The time-rolls——

Cross-Q. 60. I didn't ask in reference to the time-rolls. Question repeated.

A. Yes, sir.

Cross-Q. 61. Does "Exhibits Franklin T. Roberts Nos. 3 and 4" show that he worked during the week ending September 11th?

A. No, sir.

Cross-Q. 62. Then they are incorrect, are they not?

A. No, sir.

Cross-Q. 63. Do you say that they are correct as to showing the time when he worked?

A. I do not.

Cross-Q. 64. Aren't they incorrect in that respect?

A. They do not show——

Cross-Q. 65. I want an answer, "Yes" or "No," whether they are correct or incorrect.

A. Yes, sir.

Cross-Q. 66. Now, aren't they incorrect in regard to the time when Henry worked the three days represented to be worked during the week ending September 11th, 1880, and also when they represent that Michael Rainbow worked eight (8) days and six (6) hours during the week ending October 11th, 1880?

A. In answer to the first part of that question——

902 (Counsel for Marsh insists upon a direct answer to that question, either yes or no, it being the same in substance as that in regard to Ethridge.)

Cross-Q. 67. Question repeated.

(Counsel for Nichols, Shepard & Co. objects to the question as intended to mislead, and insists that the counsel shall refer to the parties separately, and shall not demand an answer yes or no from the witness upon such a question; and he desires to call the attention of the honorable Commissioner of Patents to this and the preceding question as an attempt by counsel for Marsh to mislead.)

A. I cannot answer the question with a "Yes" or "No."

Cross-Q. 68. Referring to page 346 of "Exhibit Franklin T. Roberts No. 4," to John Henry's account for 1880 and to the item, September 11th, three (3) days' work, $4.50; and to page 311 of "Exhibit Franklin T. Roberts No. 3," the account headed "Labor record," September 11th 1880, Henry, three (3) days' time, etc., I now ask if those records, as they stand on those pages, are not false as to the time when the work was performed.

(Counsel for Nichols, Shepard & Co. objects to the question, as it is not claimed that the books show—*i. e.*, "Franklin T. Roberts Nos. 3 and 4"—the actual time, hour, or date that the work was performed.)

A. They are.

Cross-Q. 69. Referring to "Exhibit Franklin T. Roberts No. 4," page 303, where Michael Rainbow is credited with eight (8) and six-tenths ($\frac{6}{10}$) days' labor under date of October 11th, — if in view of witness' previous testimony it is not false, so far as three (3) and four-tenths ($\frac{4}{10}$) days' labor is concerned. I mean false in regard to the time when the three (3) and four-tenths ($\frac{4}{10}$) days' labor was performed.

(Objection repeated by counsel for Nichols, Shepard & Co., and also the notice.)

A. It is.

Cross-Q. 70. That would leave five and two-tenths ($5\frac{2}{10}$)

903 days' labor performed by Michael Rainbow during that week, would it not, ending October 11th?

A. I wish to make a correction in regard to my previous answer of this question and say that three and two-tenths ($3\frac{2}{10}$), and not three and four-tenths ($3\frac{4}{10}$)—three and two-tenths ($3\frac{2}{10}$) is not work done in that week. It would leave five and four-tenths ($5\frac{4}{10}$) days' labor done that week.

Cross-Q. 71. Now, will you point out any record anywhere, other than appears on these two exhibits, 3 and 4, of that three and two-tenths ($3\frac{2}{10}$) days' labor?

A. I think I can—on the time-rolls for that week ending October 11th.

Cross-Q. 72. You haven't looked at it, have you?

A. No, sir.

Cross-Q. 73. It is only an inference, then, that it may be there, isn't it?

A. Yes, sir.

Cross-Q. 74. Now, so far as your testimony is concerned that this three and two-tenths ($3\frac{2}{10}$) days' labor was performed the previous week in ironing the two new forges, you depend solely upon your recollection, do you not?

A. I am quite positive that it is memorandaed on the time-sheet for the week ending October 11th.

Cross-Q. 75. How do you know that it was done in ironing the forges?

A. Because I am quite positive that I see him at work on those two forges.

Cross-Q. 76. During the week of October 2d, 1880?

A. Somewheres about that time.

Cross-Q. 77. What was the work that you saw him do in ironing the forges?

A. I did not see him do very much of the work; only noticed him at work when passing by.

Cross-Q. 78. How do you know that he was at work on the forges then?

A. Only by seeing what he was doing.

904 Cross-Q. 79. What was he doing?

A. He was what they term ironing the forges.

Cross-Q. 80. What kind of work constituted the ironing the forges?

A. Not being an expert at the business, I cannot state.

Cross-Q. 81. Then you can't say that he was ironing the forges, can you?

A. Not exactly, only what was said about it at the time—that that was what he was doing.

Cross-Q. 82. So you don't judge now from what you saw him do, but from what was said about it?

A. Not so much from what I saw as what was said.

Cross-Q. 83. Did you keep a memorandum of his time at that time?

A. I think not at that time. I think he gave it to me the first week—October 11th—that he was paid.

Cross-Q. 84. That is, he told you he had worked eight and six-

tenths ($8\frac{6}{10}$) days up to the end of that week, did he, or you can explain what the facts were?

A. I think he said, "George, I have got in thirty-two (32) hours' extra time for the work done by me."

Cross-Q. 85. And you gave him credit for it?

A. I did.

Cross-Q. 86. And you saw him ironing the forges a little while?

A. Not a little while, but he was here somewheres in the neighborhood of three days.

Cross-Q. 87. Now, how much time did you actually see him work during this extra time?

A. O, probably ten (10) or fifteen (15) minutes a day.

Cross-Q. 89. But you kept no record of it until it was all summed up?

A. No, sir.

Cross-Q. 90. And then took his statement for it?

A. Yes, sir.

Cross-Q. 91. You had confidence enough in Mr. Rainbow to believe that he told the truth, then?

905 A. Yes, sir.

Cross-Q. 92. How long have you known him?

A. Somewheres about seventeen (17) years, I guess; ever since I was a little boy.

Cross-Q. 93. You have been pretty intimately acquainted with him, then, haven't you, of late years?

(Counsel for Nichols, Shepard & Co. objects to the question as not being proper cross-examination.)

A. Yes sir.

Cross-Q. 94. He has been a master in the same Masonic lodge of which you are a member, has he not, for some years?

(Counsel for Nichols, Shepard & Co. objects to the question as entirely irrelevant, immaterial, and not proper cross-examination.)

A. I think he was master for one (1) year, possibly two (2).

Cross-Q. 95. And from your acquaintance with him you have no reason to think otherwise than that he would tell the truth with regard to his work and the time he had worked, have you?

A. No, sir.

Cross-Q. 96. This was the summer that the shop called the boiler shop was built and completed, wasn't it—the summer of 1880?

A. I think that that is the year that the shop was built.

Cross-Q. 97. Do you recollect whether or not John Breman was up here with his foreman and one or two men repairing the boilers while the shops were shut down that year?

(Counsel for Nichols, Shepard & Co. objects to the question for same reasons before given to cross-question No. 94.)

A. I don't remember as to John Breman being here, but I think that his foreman and one or two men were here repairing the boilers.

Cross-Q. 98. About what time?

906 (Objection repeated by counsel for Nichols, Shepard & Co.)

A. The fore part of September.

Cross-Q. 99. Now, what account would be made of repairs of that kind; I might say that in "Exhibit Franklin T. Roberts No. 1" I find a repair account?

A. The work done, if any, by regular workmen would be charged in the labor account, and I think the other charges, if any were made, would be charged to expense accounts or "Vibrator material account."

Cross-Q. 100. If a man was especially called to assist in such a job where would his time and money account appear? I will explain by saying a man not then one of the regular workmen.

A. I would ask what you mean by the term "not then regular workmen?"

Cross-Q. 101. I mean if when the shops shut down a man was laid off, not retained for that period, and that if he should be sent for afterwards to assist specially parties in making repairs of the kind mentioned.

A. It would be charged to labor account and entered on the labor record.

Cross-Q. 102. Now, during the time of shutting down in 1880 do you know, of your own knowledge, that all the work that was done in and about the shops of Nichols, Shepard & Co. was ultimately correctly entered and represented in these three (3) "Exhibits Franklin T. Roberts Nos. 1, 3, and 4"—*i. e.*, of your own knowledge, I mean?

A. If the work was done for Nichols, Shepard & Co. it was duly entered in either one of the three (3) books, exhibits above mentioned. A good many times men come here and do odd jobs for themselves whilst the shops are shut down that no account is made of.

Cross-Q. 103. Question repeated, with this addition: that you can say "yes" or "no" to that question as it calls for your own knowledge only. If you saw all the work done and afterwards entered
907 it up in the books, then, of course, you can state whether the books correctly represent the work or not. If you did not see all the work done, but took statements of others for the whole or a portion of it, it would not be within your own knowledge.

A. I did not see all the work done, but what time was reported appears on these books.

Cross-Q. 104. There was considerable time reported by workmen and foremen for workmen during this time, was there not?

A. There was.

Cross-Q. 105. And you have no personal knowledge of it except the report?

A. No, sir.

Cross-Q. 106. And of your own knowledge you can't say but what Mr. Rainbow included the time that he spent in making this stop in question and fixing the reach rod in the three days and two hours' extra time which he reported in the first week of October?

A. It is my opinion that he stated in particular that this time—this thirty-two hours' time referred to—was put in on those forges.

Cross-Q. 107. You don't mean to state anything but your impression, I suppose, Mr. Barrows, do you?

A. That is all.

Cross-Q. 108. Now, when you say in reference to the three days of John Henry's, which purports to have been done in the week of September 11th, 1880, I suppose you only state to the best of your recollection in regard to what the time was for and when it was earned.

A. No; I do not. Mr. Henry came to me and asked as a special favor that I do what I could for him to help him get this extra time allowed him.

Cross-Q. 109. Did you do so?

A. I did—that is, I told him what course to follow in the matter.

Cross-Q. 110. Are you positive or do you only state to
908 the best of your recollection the character of this overtime mentioned of Mr. Henry?

A. It is only to the best of my recollection of what he told me the time was for.

Cross-Q. 111. Now, don't you recollect that the wood-sawing referred to was done in the last week of September and the first week of starting up in October of that year? I am so informed that that is the fact.

A. I don't recollect it so.

Cross-Q. 112. Can you state positively that it wasn't so, or only to the best of your recollection?

A. I cannot say it wasn't so, because they generally saw wood about two or three months apart.

Cross-Q. 113. You took Mr. Henry's statement of this time, didn't you—this overtime?

A. I did.

Cross-Q. 114. You have no reasons generally to doubt his word, have you?

A. No, sir.

Cross-Q. 115. Do you recollect when the old testing shop was pulled down that summer or fall?

(Counsel for Nichols, Shepard & Co. objects to the question [as] improper cross-examination; also object to counsel for Marsh interjecting into the record as to what he has been informed.)

A. I do not.

Cross-Q. 116. Were you absent from the works at any time during September? If so, just state the time, please.

A. I was absent either two or three days between the 11th and 18th. I think that was all.

Cross-Q. 117. How do you fix the time?

A. By the time the State fair was held in Detroit.

Cross-Q. 118. Calling attention to page 346, the account of John Henry, in "Exhibit Franklin T. Roberts No. 4," do you know anything about those corrections and erasures to the bottom of that account?

909 A. I can't say now when they were made or what they were made for.

WITNESS says: I wish to correct my answer to direct question No. 21 by saying that if there is no foreman at work that I get the time myself.

By consent, an adjournment taken to 2 o'clock p. m., May 14th, 1883, at the office of Nichols, Shepard & Co., for the taking of further depositions.

E. M. CONVERSE,
Notary Public.

Taking of depositions in this matter resumed at 2 o'clock p. m., May 14th, 1883, at the office of Nichols, Shepard & Co.
Present: Counsel for the respective parties.

Cross-examination of witness, GEORGE F. BARROWS, by Mr. PARKER, counsel for Marsh:

Cross-Q. 119. You made some affidavits, Mr. Barrows, last fall some time, the latter part of November or fore part of December, in this matter, did you not?
A. I did.
Cross-Q. 120. They were sworn to before Frank M. Dunning, were they not?

(Counsel for Nichols, Shepard & Co. objects to the question, as the affidavits will show for themselves.)

A. Yes, sir.
Cross-Q. 121. They are the only ones you have made in this matter, I suppose?
A. Yes, sir.

Cross-examination closed.

Redirect examination of witness, GEORGE F. BARROWS, by ALEX. MAHON, Esq., counsel for Nichols, Shepard & Co.:

910 Redirect Q. 1. How do you identify these time-rolls, "Franklin T. Roberts No. 5," and not dated, as the ones upon which time was kept during the early part or during the month of September?
A. By checking them up with the time and amounts paid to several workmen on those time-slips.
Redirect Q. 2. Can you tell me why Henry's account, or the $4.50, was not paid him until the week ending September 11th?
A. Because there was a dispute between him and Mr. Hoag as to the amount he should receive for services performed.
Redirect Q. 3. Did you have any talk with him about that amount before it was paid?
A. I did.
Redirect Q. 4. About how long before it was paid?
A. Well, the last talk I had with him was on the same day that it was paid him—Thursday, September 9th.
Redirect Q. 5. Did he ever talk with you about it before that time?

A. Yes; I think he did once or twice.

Redirect Q. 6. About what time, as near as you can state?

A. I couldn't state any definite time, though I think all the conversation I had with him about it took place that week.

Redirect Q. 7. Did he tell you at that time what he claimed this extra amount for?

A. To the best of my recollection, he stated all the circumstances connected with it.

Redirect Q. 8. And he claimed it was for work done in fixing up the engine early in the morning?

(Counsel for Marsh objects to the question as leading.)

A. Yes, sir.

Redirect Q. 9. State that conversation as near as you can.

A. I think he said, "George, I have got some overtime
911 coming to me for work done mornings in fixing up the engine, and Hoag says that he don't know anything about it, and that I will have to see some one else before I can get any pay for it."

Redirect Q. 10. You are positive, are you, that he told you that it was for work done in fixing up the engine?

(Counsel for Marsh objects to the question as leading.)

A. Quite so; yes, sir.

Redirect Q. 11. What did he say, if anything, the next time he talked with you about it?

A. He came in the office on this Thursday morning before mentioned and says, "Hoag sent me in here after four dollars and a half, being the amount allowed me by him for what I was speaking to you about this morning."

[On the margin: Do they pay on such statements from unknown — without a statement from the foreman?]

Redirect Q. 12. How do you know that the extra time allowed Rainbow was for the work done in ironing the forges?

(Counsel for Marsh objects to the question as having been gone over fully and not being proper redirect examination.)

A. Only from what I saw and what he told me.

Redirect Q. 13. He told you it was for that work; did he or not?

(Objection repeated by counsel for Marsh; also as leading.)

A. I am quite positive that he did.

Redirect Q. 14. Are these books intended to show—"Franklin T. Roberts Nos. 3 and 4"—the time that the work is actually done or the actual amount of work and the payment made therefor?

(Objection repeated by counsel for Marsh.)

A. They are intended to show the actual amount of work done and the amounts paid therefor and not the time exactly when the work is done.

Redirect Q. 15. Do you ever pay men in small amounts and not make an entry of it and wait before making an entry of it until you make the final payment?

(Same objection by counsel for Marsh.)

912 A. No, sir.

Redirect Q. 16. In both of those conversations with Mr. Henry, before referred to, did he or not claim that any of the work had been done during that week or not?

(Objection repeated by counsel for Marsh.)

A. He did not.

Redirect Q. 17. Did he or not claim that all the work had been done before that week, if you remember?

(Objection repeated by counsel for Marsh, and counsel for Marsh gives notice that he will move to strike out all the testimony of this witness in reference to statements of Rainbow and Henry said to have been made to this witness with reference to the character of the work and the time of its performance on the ground that it is not competent to introduce the statements of the witnesses Henry and Rainbow other than their testimony without first laying a proper foundation therefor by first calling the attention of witnesses Henry and Rainbow to such conversations and statements.)

A. To the best of my recollection, he did.

Redirect Q. 18. How do you know that Ethridge was present and worked the week ending September 11th, 1880?

(Counsel for Marsh objects to the question as leading and not proper direct, the witness having already testified on that point.)

A. Only by the time-sheet for the week ending September 18th.

Redirect Q. 19. Is all the time or extra time made by a workman entered upon either the first or second week slips?

A. It is, if put on the slips at all.

Redirect Q. 20. Do you know why there was no record kept of that extra work done by Henry?

A. It is our custom, when a man comes in—or a foreman—and reports some time for a man, and he is paid for it from the cash drawer, as in case of Henry, there is no record made of such time, except that time is credited on the labor record to correspond with the amount paid him.

913 Redirect Q. 21. Do you know why Henry's time or extra time for which you paid him that $4.50 was not kept on a slip?

A. Because we didn't deem it necessary.

Redirect Q. 22. But from the nature of the work done and the time of doing it it was necessary for him to keep his own time, was it not?

A. It was.

Redirect Q. 23. Please explain the manner of paying the work-

men—*i. e.*, how you generally make up their accounts and pay them the cash.

A. First, I enter up the time, then extend the amount earned, and then extend the amounts paid. Each man's money is placed in an envelope, with his name and amount marked thereon, and paid to them in hand by me.

Redirect Q. 24. How many different days did you see Rainbow at work when he was ironing the forges?

A. Three (3), I think.

Redirect Q. 25. In your cross-examination you say you do not know of your own knowledge that the "Exhibits Franklin T. Roberts Nos. 1, 3, and 4" contain a complete record of the labor performed during the month of September, 1880. Please explain why you cannot or do not know of your own knowledge.

(Counsel for Marsh objects to the question as already explained and as not proper redirect.)

A. Because there might have been some work done by the men for themselves, and possibly for other parties, that no account was made of to me, and, further, that I was absent from work for two or three days during the month of September, but I think that all the work done for Nichols, Shepard & Co. during the month of September is accounted for in the three (3) Exhibits Nos. 1, 3, and 4.

Redirect Q. 26. Otherwise do you know that they do contain a complete record of labor performed during the month of September, 1880?

A. I do.

914 Redirect Q. 27. Explain the method of balancing the books after the men have been paid to show their correctness.

A. First, each man's account is footed up in the ledger at the end of each month, and their amounts, either debit or credit, is placed on a paper in that order; second, the amounts earned and the amounts paid are footed up, and, with the balance brought down, either to the credit or debit of labor account, are added in, and the difference between the amounts paid and the amounts earned have to agree with the credits and debits of each man's account.

Redirect Q. 28. Would it be possible for the books to balance if a man had received pay for work he had not done—*i. e.*, work that was not reported?

(Counsel for Marsh objects to the question as not proper surrebutting, and there is no claim that the books show payments for work that hasn't been done.)

A. It would show a debit of such an amount paid in the man's account.

Redirect Q. 29. Please examine a single slip now handed you, which I request notary to mark "Exhibit George F. Barrows No. 1" for identification, the same marked by notary for identification as "Exhibit George F. Barrows No. 1," and state, if you know, what it is.

(Counsel for Marsh objects to the question on the ground that it

was not introduced in evidence as an exhibit in this case on the direct examination of this witness; as an exhibit, that the testimony founded thereon would not be proper redirect, and notice is given that a motion will be made to strike the same out.)

A. A time-slip of engine-room No. 2 for the week ending Monday, October the 11th, 1880.

Redirect Q. 30. Can you testify or state when the entries were made on that slip?

(Same objection by counsel for Marsh.)

A. They were made between October 4th and October 11th.

915 (Counsel for Nichols, Shepard & Co. now offers time-slips, marked "Exhibit George F. Barrows No. 1," in evidence.)

(Counsel for Marsh repeats same objection and motion as last above.)

Redirect examination closed.

Recross-examination of witness, GEORGE F. BARROWS, by Mr. PARKER, counsel for Marsh:

Recross-Q. 1. If Ethridge worked the first two weeks in September, 1880, it ought to appear so on those exhibits, ought it not?

A. Not necessarily so.

Recross-Q. —. If he worked six days in the week ending September 11th, 1880, putting up line shafting he ought to have credit for it on the books, shouldn't he?

A. Yes, sir.

Recross-Q. 3. When you say the books balance you simply mean that the men have been paid for all the work that the books show that they have been credited with, don't you?

A. I mean this, that when I pay off I have so much money to commence with, and after I get the money put up the difference between the amounts paid and the amount of cash I had on hand is the balance I should have left.

Recross-Q. 4. Question repeated.

A. Yes, sir.

Without waiving any objections to this time-roll, "George F. Barrows No. 1," I will ask from it—

Recross-Q. 5. In whose handwriting are the figures representing the time?

A. The regular time is in Mr. Thomson's and the extra time in my own.

Recross-Q. 6. That is, the entries in pencil opposite Rainbow's and Henry's names are in your handwriting, are they?

A. Yes, sir.

916 Recross-Q. 7. Opposite Henry's name, isn't that six hours' extra time that that is disputed over the firing up of that engine in sawing wood?

A. I think not; no, sir.

Recross-Q. 8. What is it for?

A. I could not say; not from recollection.

Recross-Q. 9. When did he work it?

A. I would infer——

Recross —. 10. I don't want inferences; I want to know if you know.

A. I do not, exactly.

Recross-Q. 11. What does that six (6) days at Lansing mean opposite Henry's name?

A. It means that he was there at the fair with an engine.

Recross-Q. 12. During the time the shops were shut down?

A. I could not say exactly when it was, but think that they left here about the last of September; anyway, it was the fall fair.

Recross-Q. 13. Now, is there in the labor record or labor ledger any credit to Henry for that six (6) days at the Lansing fair?

A. I couldn't say without reference to the books.

Recross-Q. 14. Look at the books and see if you don't know without.

A. There is not. That money was paid to him by Mr. F. G. Shepard.

Recross-examination closed.

Re-redirect examination of witness, GEORGE F. BARROWS, by ALEX. MAHON, Esq., counsel for Nichols, Shepard & Co.:

Re-redirect question 1. To what account is this fair work charged? Answer. Most always charged to travelling account.

Re-redirect examination closed.

GEORGE F. BARROWS.

917 The foregoing deposition was subscribed and sworn to before me this 14th day of May, A. D. 1883.

EUGENE M. CONVERSE,
[SEAL.] *Notary Public.*

By consent of parties, an adjournment taken until May 15th, 1883, at 9 o'clock a. m., at the office of Nichols, Shepard & Co., in Battle Creek, Michigan.

E. M. CONVERSE,
Notary Public.

May 14th, 1883.

At the office of Nichols, Shepard & Co., in the city of Battle Creek, Michigan, on Tuesday, May 15th, 1883, at 9 o'clock a. m., the taking of depositions in this matter was resumed.

Present: Counsel for the respective parties.

Albert Griswold.

ALBERT GRISWOLD, produced as a witness, and being first duly sworn, does depose and say, in answer to interrogatories proposed to him by ALEX. MAHON, Esq., counsel for Nichols, Shepard & Co., assignees, &c., as follows, to wit:

Question 1. State your name, age, residence, and occupation.

Answer. Albert Griswold; am forty-one; residence, Battle Creek, Michigan; and am a machinist.

Q. 2. In whose employ were you in the year 1880?

A. Nichols, Shepard & Co.

Q. 3. How long have you been employed by them?

A. Since June, 1869.

Q. 4. What time is it usual, if you know, to wash the windows of the shops?

(Counsel for Marsh objects to the question as irrelevant, immaterial, and not surrebuttal.)

A. After we got through invoicing, along the last of September or first of October.

918 Q. 5. Who had charge of washing the windows?

(Same objection by counsel for Marsh.)

A. Stillman—George A. Stillman.

Q. 6. Do you know what time the windows were washed in 1880?

(Same objection repeated by counsel for Marsh.)

A. I couldn't give you the exact date; somewhere about the 25th of September.

Q. 7. Can you swear that it was not done earlier than the 20th of September?

(Objection repeated, and also leading.)

A. Yes, sir.

Q. 8. Do they wash all the windows or not of the different shops at the same time?

(Same objection repeated.)

A. About the same time; yes, sir.

Q. 9. Were any washed, if you know, in 1880 before the 20th of September?

(Objection repeated by counsel for Marsh.)

A. No, sir; they was not.

Q. 10. Did John Henry help you to wash windows, or do you know whether he washed any windows of the shops in the first two weeks of September, 1880?

(Same objection repeated.)

A. He did not.

Q. 11. Do you know of any reason—that is, of your own knowledge—why the windows were washed the latter part of September?

(Objection repeated.)

A. Yes, sir; in taking the invoice they get as dirty as they was before they was washed—from the dust.

Q. 12. Do you know when they commence to take these invoices generally?

(Objection repeated.)

A. The next week after we shut down for repairs.
Q. 13. Do you know how long it takes, generally?

(Objection repeated.)

919 A. About three (3) weeks; a little over, I think.
Q. 14. Do you know when the invoice was taken in 1880?

(Same objection repeated.)

A. What day it commenced?
Q. 15. Yes; about what day?
A. The sixth, we commenced.
Q. 16. Who pays you for your work generally?

(Objection repeated by counsel for Marsh.)

A. George Barrows.
Q. 17. You generally found that he has kept the proper time, and has he always paid you correctly or not?

(Counsel for Marsh objects to the question, same as above repeated.)

A. Yes, sir; and he has paid me correctly.

Direct examination closed.

Without waiving any objection the cross-examination of witness, ALBERT GRISWOLD, proceeded with by Mr. PARKER, counsel for Marsh:

Cross-Q. 1. You mean in taking an invoice, you mean taking an account of stock, don't you?
A. Yes, sir.
Cross-Q. 2. Did you assist in taking an account of stock in 1880?
A. I did.
Cross-Q. 3. What buildings was it taken in?
A. In all of them.
Cross-Q. 4. Did you assist in taking stock in all of the buildings?
A. I did.
Cross-Q. 5. Who helped you?
A. Taylor—there was four (4) of us—and Michael Sage and George Champion.
Cross-Q. 6. What did you have to do with washing the windows, if anything?
920 A. To take them out, wash them, and put them back.
Cross-Q. 7. Well, did you assist in washing the windows in that fall of 1880?
A. I did.
Cross-Q. 8. Do you know in what building you were at work the week commencing the 6th of September, 1880?

(Counsel for Nichols, Shepard & Co. objects to the question as immaterial.)

A. In Brown's room and in the cellar.

Cross-Q. 9. Did you work there all that week?

A. I couldn't tell you whether we worked there all the week in those two rooms or not, or whether we were out of doors some.

Cross-Q. 10. By the two rooms you mean the cellar and Brown's room, do you? The cellar belongs to Brown's room, does it?

(Objection repeated by counsel for Nichols, Shepard & Co.)

A. Yes, sir; the cellar is under Brown's room.

(Witness shown "Exhibit Andrew Thomson No. 1" and asked:)

Cross-Q. 11. Do you know what the wood cut on it represents?

(Counsel for Nichols, Shepard & Co. objects to any examination on this so-called exhibit as not being proper cross-examination, it being entirely irrelevant and immaterial.)

A. I don't know anything about a wood cut. It looks like the shops here some.

Cross-Q. 12. Does it look like the shops of Nichols, Shepard & Co?

(Objection repeated as before.)

A. Some like them; yes, sir.

Cross-Q. 13. Now, will you point out on that exhibit what was then called Brown's room?

(Objection repeated as above.)

A. (Place marked on exhibit by witness "A. G." in red ink, and he says:) It is in the lower story here.

Cross-Q. 14. Now, Mr. Griswold, do you know of your own knowledge, without inferring from general practices, whether John
921 Henry actually washed any windows during the week ending September 11th, 1880, at the shops of Nichols, Shepard & Co.—by your own knowledge? I mean what you actually know and saw yourself.

A. He did not.

Cross-Q. 15. Did you see him all that week?

A. I did not see him all the week; don't know as I saw him at all.

Cross-Q. 16. Can you say you didn't see him?

A. I cannot say I didn't see him; but I don't know as I did see him.

Cross-Q. 17. Do you know what he was doing?

A. I do not.

Cross-Q. 18. Do you recollect whether or not you were in what is marked here as engine shop "A. T. 2" on this "Exhibit Andrew Thomson No. 1" during that week?

(Counsel for Nichols, Shepard & Co. renews his objections in regard to this so-called exhibit.)

A. I presume I was through these, I couldn't say for certain.

Cross-Q. 19. Did you take any account of stock in that room or in that building in that week?

A. I don't think we had got to that quite at that time.

Cross-Q. 20. Do you recollect when you did take any account of stock in that building?

A. No; I can't recollect what week it was.

Cross-Q. 21. Now, if you didn't take any account of stock in that building in that week, and didn't know what Henry was doing that week, and don't remember being in that building that week, how can you say of your own knowledge that he didn't wash any windows, not even two or three, in that building that week?

A. I know because there was none washed until after the 20th.

Cross-Q. 22. Now, if they had been washed and been dirtied
922 up again in taking account of stock they would have to be washed over again, wouldn't they?

A. I suppose so.

Cross-Q. 23. Then how do you know whether they were washed or not?

A. I do know there was none washed.

Cross-Q. 24. Did you see all the windows of that engine-room and take particular notice whether they had been washed or not?

A. I did not.

Cross-Q. 25. Do you know what they were doing in that engine-room that week?

A. I do not.

Cross-Q. 26. Do you remember what it was that you took an account of stock of in that engine-room that fall?

A. Took everything but the machinery; I couldn't tell exactly what it was.

Cross-Q. 27. Then, if I understand you, you don't remember particularly what it was, any more than you took an account of whatever there was there, whatever it might be?

A. Yes, sir.

Cross-Q. 28. Do you recollect whether there was much handling or much dust raised in taking an account of stock in that room that fall?

A. There always is; yes, sir.

Cross-Q. 29. Now, when you took that account of stock in that room you took particular notice, didn't you, to see whether the windows had been washed or not?

A. I think so.

Cross-Q. 30. Now, as a matter of fact, did you think of it; did it occur to you?

A. I think they was not washed.

Cross-Q. 31. Question repeated.

A. Yes, sir.

Cross-Q. 32. And you remember now that at that time you took particular notice to see that the windows hadn't been washed?

923 A. Yes, sir.

Cross-Q. 33. Why did you take notice to see whether the

windows had been washed? Did you think that you would be asked about it?

A. No, sir.

Cross-Q. 34. Why was it you took notice?

A. They being very dirty.

Cross-Q. 35. That would be the very reason why you wouldn't notice them, wouldn't it?

A. I think not. We couldn't see so well.

Cross-Q. 36. Is it a dark room?

A. It isn't so very light.

Cross-Q. 37. Is it necessary that the windows should be kept very clean to do work conveniently in it?

A. No; it isn't necessary; not very.

Cross-Q. 38. When you were taking an account of stock in that room that year you overhauled whatever was there aside from the machinery and made a list of it—a memorandum?

A. Yes, sir.

Cross-Q. 39. In making a memorandum you could go up to the windows and get the advantage of all the light, couldn't you?

A. We could if we wanted to.

Cross-Q. 40. Were the windows dirtier than usual at that time of year?

A. No, sir; I think not.

Cross-Q. 41. Had any repairs been made in that shop before you took an account of stock that you recollect of?

A. I don't recollect of any. There might have been.

Cross-Q. 42. Do you know whether there was a line of shafting in it at that time or not?

A. There was.

Cross-Q. 43. Where was it—overhead?

A. It was.

924 Cross-Q. 44. Now, don't you remember that that line of shafting had been repaired and lined up, taken down and put back again, before you took an account of the stock that fall, in the first and second weeks of September?

A. No, sir; I don't recollect.

Cross-Q. 45. And that scaffoldings were built for that purpose?

A. I do not.

Cross-Q. 46. You are a machinist, are you not?

(Counsel for Nichols, Shepard & Co. objects to this and all the preceding questions of a like tenor, it being simply an attempt by a long cross-examination to mislead the witness and as an attempt to interject into the record his own statements, and also that it is not warranted by the examination-in-chief.)

A. I am.

Cross-Q. 47. Now, if scaffoldings had been built and that line shafting took down and put back, some two weeks' work been done on it in that shop, it necessarily would start considerable dust from the joist, etc., wouldn't it?

(Objection repeated, and that the question is entirely immaterial and irrelevant.)

A. I think it would.

Cross-Q. 48. It is rather a nice job to put up a long line of shafting like that, isn't it—to have it run true?

(Objection repeated by counsel for Nichols, Shepard & Co.)

A. Yes, sir.

Cross-Q. 49. Plenty of light wouldn't be any objection, would it?

A. No, sir.

Cross-Q. 50. If the windows had been ten or eleven months gathering dust it would be quite natural if they had a job of that kind to do in that shop, to clean up the windows a little so they could see, wouldn't it?

A. Yes, sir; sweep them down.

Cross-Q. 51. And quite a probability that they would get
925 somewhat dirty again, so that when you came to take an account of stock it wouldn't be noticeable that they had been cleaned?

A. They wouldn't get so dirty as they would in ten or eleven months.

Cross-Q. 52. Well, you don't know as you would notice, under those circumstances, whether they had been cleaned or not, really, would you?

A. I think you could tell if they had.

Cross-Q. 53. Do you think you could tell if your attention was not particularly directed to them, so that you could say two years and a half afterwards that you actually noticed, as a matter of fact, that those windows had not been cleaned?

A. I know they hadn't.

Cross-Q. 54. None of them?

A. No, sir; none of them.

Cross-Q. 55. They didn't clean them to put up that line shafting?

(Counsel for Nichols, Shepard & Co. removes his objection given to cross-question No. 45.)

A. No, sir; they didn't; they might have brushed them down with a broom.

Cross-Q. 56. Do you think you could tell whether they had or not?

A. I don't know whether I could or not.

Cross-Q. 57. When was your attention first called to the question of Henry's washing windows?

(Counsel for Nichols, Shepard & Co. objects to question as being entirely irrelevant and immaterial.)

A. A year ago or a year and a half ago.

Cross-Q. 58. What first called it to your attention?

(Objection renewed.)

A. I think Stillman spoke to me about it first.

Cross-Q. 59. Have you ever talked with any one but Stillman about it?

(Objection repeated.)

A. Yes, sir.

926 Cross-Q. 60. Have you talked with E. C. Nichols about it?

(Objection repeated.)

A. Yes, sir.

Cross-Q. 61. Now, haven't you repeatedly said to various parties at various times that you were uncertain about it and didn't know really anything about the matter?

(Counsel for Nichols, Shepard & Co. objects to the question, as it hasn't been proven that witness has ever said any such thing, and, further, that the names and the dates are not stated.)

A. No, sir; I never said so.

Cross-Q. 62. Now, isn't really all you do know about the matter this, that the regular window-washing of the shops takes place just before starting up, the latter part of September; that when you went into this engine shop to take stock that you didn't notice that the windows had been cleaned, and from those two facts you infer that the aforesaid John Henry couldn't possibly have done any window-cleaning during the week ending September 11th, 1880?

(Counsel for Nichols, Shepard & Co. objects to the question, as it has been fully answered by the witness.)

A. I know he had not.

Cross-Q. 63. Then you know all he was doing, don't you?

(Counsel for Nichols, Shepard & Co. objects to the question as not proper cross-examination, as the witness has already stated in his direct examination as to the washing of the windows and not as to what Henry might be doing within one or ten miles of the shop.)

A. No, sir.

Cross-Q. 64. When was the last time you talked with Mr. Nichols about this?

(Counsel for Nichols, Shepard & Co. objects to the question as irrelevant and immaterial.)

A. Oh, one day last week.

Cross-Q. 65. You made an affidavit on this matter last fall, didn't you?

927 A. I did.

Cross-Q. 66. Did you write it?

(Counsel for Nichols, Shepard & Co. objects to the question, as the affidavit shows for itself, and, having been signed by the witness, that is all that is necessary to be proven, and objects to the affidavit being referred to unless it be produced or a certified copy thereof.)

A. I did not.

Cross-Q. 67. Who did, if you know?

(Objection repeated.)

A. I couldn't tell you.

Cross-Q. 68. Who was it sworn to before?

A. Dunning, I think.

ALBERT GRISWOLD.

Taken, subscribed, and sworn to before me this 15th day of May, A. D. 1883.

EUGENE M. CONVERSE,
Notary Public.

[SEAL.]

STATE OF MICHIGAN, *County of Calhoun,* } ss:

I, Eugene M. Converse, a notary public within and for the county of Calhoun and State of Michigan, resident of the city of Battle Creek, do hereby certify that the foregoing depositions of David Shepard, Wallace M. Stilson, Franklin T. Roberts, Edgar Ethridge, Andrew Thomson, George F. Barrows, and Albert Griswold were taken on behalf of Nichols, Shepard & Co., assignees of Andrew J. Hoag, in pursuance of the notice hereto annexed, before me, at the office of Nichols, Shepard & Co., in the city of Battle Creek, in said county of Calhoun, on the 8th, 9th, 10th, 11th, 12th, 14th, and 15th days of May, A. D. 1883; that each of said witnesses was by me duly sworn before the commencement of his testimony; that the
928 testimony of each of said witnesses was written out by myself; that the opposing party, Elon A. Marsh, by R. A. Parker, Esq., and Mr. Martin Metcalf, counsel for Marsh, were present during the taking of said testimony; that said testimony was taken at Battle Creek, Michigan, and was commenced at 10 o'clock a. m. on the 8th day of May, 1883; was continued, pursuant to adjournment, on the 9th, 10th, 11th, 12th, 14th and was concluded on the 15th of said month of May, 1883; that I am not connected by blood or marriage with either of said parties nor interested, directly or indirectly, in the matter in controversy.

In testimony whereof I have hereunto set my hand and affixed my seal of office, [in] the city of Battle Creek, in said county of Calhoun, State of Michigan, this 19th day of May, 1883.

EUGENE M. CONVERSE,
Notary Public within and for Calhoun County, Michigan.

[SEAL.]

Before the Commissioner of Patents.

In the matter of the interference between the application of Elon A. Marsh, filed September 28, 1881, and the reissued letters patent granted to Nichols, Shepard & Co., assignees of A. J. Hoag, Nov. 29, 1881, No. 9951, for improvements in reversing gear for steam-engines.

SIR: You are hereby notified that on Tuesday, May 8th, 1883, at the office of Nichols, Shepard & Co., Battle Creek, Mich., at 10 o'clock'

a. m., before Eugene M. Converse or other duly commissioned officer, I shall proceed to take the testimony of George F. Barrows, Andrew Thomson, Edgar Ethridge, Albert Griswold, Wallace Stillson, David Shepard, Edmund D. Brown, Franklin T. Roberts, A. A. Ellsworth, Andrew J. Hoag, and E. C. Nichols, all of Battle Creek,
929 Mich., and others as witnesses in rebuttal on behalf of Nichols, Shepard & Co., assignees of A. J. Hoag, the examination to continue from day to day until completed.

Respectfully,

A. M. SMITH,
Att'y for A. J. Hoag, Assignor, &c.

Washington, D. C., April 30, 1883.

Service acknowledged this 30th day of April, A. D. 1883.

C. M. ALEXANDER.

930 In the matter of the interference between the application of Elon A. Marsh for a patent for improvement in reversing gear for steam-engines and reissued letters patents No. 9051, granted November 29th, 1881, to A. J. Hoag, assignor to Nichols, Shepard & Co., now pending before the Commissioner of Patents.

Depositions of witnesses examined on behalf of Andrew J. Hoag, assignor to Nichols, Shepard & Co., pursuant to the annexed notice, at the office of Nichols, Shepard & Co., in the city of Battle Creek, Calhoun county, State of Michigan, on Thursday, May 17th, 1883.

Present: Alex. Mahon, Esq., counsel for Andrew J. Hoag, assignor to Nichols, Shepard & Co., on behalf of Andrew J. Hoag, assignor, etc.

There is no one who appears on behalf of Elon A. Marsh at the taking of depositions pursuant to the annexed notice.

James W. Wood.

JAMES W. WOOD, produced as a witness and being first duly sworn by me, does depose and say, in answer to interrogatories proposed to him by ALEX. MAHON, Esq., counsel for Andrew J. Hoag, assignor of Nichols, Shepard & Co., as follows, to wit:

Direct Question 1. State your name, age, residence, and occupation.

Answer. James W. Wood; residence, Battle Creek city, Calhoun county, State of Michigan; forty-four years of age, and by occupation a hardware merchant.

(Counsel for Nichols, Shepard & Co., assignees, &c., asks the notary that in view of the absence of Mr. Parker, who, he is informed, is to represent Mr. Marsh in the cross-examination of the witnesses, and he is also informed that he, Mr. Parker, will be present to-
931 morrow morning at nine o'clock, that the taking of the testimony of the witnesses be adjourned until nine o'clock to-morrow morning.)

On request of counsel for Nichols, Shepard & Co., as above made of record, I do hereby adjourn the taking of further depositions in

this matter until May 18th, 1883, at 9 o'clock a. m., at the office of Nichols, Shepard & Co., in the city of Battle Creek, Michigan.

EUGENE M. CONVERSE,
Notary Public.

May 17th, 1883.

At the office of Nichols, Shepard & Co., in the city of Battle Creek, Michigan, May 18th, 1883, at nine o'clock a. m.

Present: Alex. Mahon, Esq., counsel for Nichols, Shepard & Co., assignees, &c., and Martin Metcalf, Esq., and R. A. Parker, Esq., counsel for Elon A. Marsh, on behalf of said Marsh.

Counsel for Nichols, Shepard & Co. states that he served a notice of which the ones here filed are copies upon R. A. Parker, Esq., and Martin Metcalf, Esq., on the 15th of May, 1883, having been informed that the date named therein was the one upon which it was intended to take the testimony, and in view of the fact that he had served this notice for the 18th of May, 1883, upon Messrs. Parker and Metcalf was the reason for the adjournment of the case yesterday under the first notice, a mistake being made by the operator in informing Mr. Mahon, making the day the 17th instead of the 18th of May, and as counsel for Nichols, Shepard & Co. simply desired to give the parties timely notice to be present, he served the notice shown by the copies filed.

Counsel for Marsh state that they had no knowledge that the date fixed in the notice served in Washington was the 17th instead of the 18th; that if they had so known they would have been present. Under the statements they say they have no objection to proceeding.

932 At request of counsel for Marsh that I produce the exhibits in my possession, marked as such by me at the recent taking of depositions, closed May 15th, 1883, in this case, I still having the said exhibits in my possession, not having made my return, do produce the said exhibits as per request of counsel for Marsh.

E. M. CONVERSE,
Notary Public.

The examination of witness, JAMES W. WOOD, resumed by ALEX. MAHON, Esq., counsel for Nichols, Shepard & Co.:

Q. 2. Have you had any business transactions with Nichols, Shepard & Co.?

(Counsel for Marsh objects to question as not surrebutting.)

[On the margin: Don't pertain to the matter, as not to same kind of acts.]

A. I have.

Q. 3. Have you settled with them by their books of account, and did you find those books of account correct?

(Same objection by counsel for Marsh, and as not material, incompetent, and not warranted by the affidavits on the motion to take surrebutting testimony.)

[On the margin: Don't conform to law in Mich. to make acts evidence.]

A. Two questions in one. I have had a great many settlements with Nichols, Shepard & Co. on my statements of debit from my books and their statements of debit from theirs to me, and we have always found them to be correct.

[On the margin: Have impeached their own satrap.]

Q. 4. State whether, in your opinion, based upon your settlements with them, they keep correct books or not.

(Counsel for Marsh objects to the question on same ground as above given.)

A. I have no reason to believe to the contrary. In all my settlements with them I have found them to be correct.

Q. 5. How long have you done business with them?

A. Something over seven years.

Without waiving any objections Mr. PARKER, counsel for Marsh, proceeds to the cross-examination of witness, JAMES W. WOOD:

Cross-Q. 1. What was the nature of the account that you
933 kept with Nichols, Shepard & Co.—covering what class of transactions?

A. Well, my sales to them—material and manufactured goods generally found in the hardware trade. My purchases from them from time to time has been belting, manufactured brass goods, castings from foundry, and other things. We had a running account.

Cross-Q. 2. General merchandising account?

A. Yes, sir.

Cross-Q. 3. Do you know who kept the account on the part of Nichols, Shepard & Co.—that is, of your own knowledge?

A. I couldn't state as to who kept the books, as I understand they had several book-keepers, and I couldn't state who kept my account.

JAMES W. WOOD.

Taken, subscribed, and sworn to before me this 18th day of May, A. D. 1883.

EUGENE M. CONVERSE,
Notary Public.

William D. Rogers.

WILLIAM D. ROGERS, produced as a witness on behalf of Nichols, Shepard & Co., and being by me duly sworn, deposes and says, in answer to interrogatories proposed to him by ALEX. MAHON, Esq., counsel for Nichols, Shepard & Co., as follows, to wit:

Direct Question 1. State your name, age, residence, and occupation.

A. My name is William D. Rogers; am forty-four years old; am by occupation foreman of the yard gang at Nichols, Shepard & Co.'s;

residence, Battle Creek, Michigan; lot 34 Nichols street, Nichols' Addition, is where I live.

Q. 2. Where were you working in the months of July, August, and September, 1880?

934 A. Working for Nichols, Shepard & Co.

Q. 3. Do you know John M. Henry?

A. I do.

Q. 4. Was he working with you in the month of August or September, 1880, at any time?

(Counsel for Marsh objects to the question as not surrebutting.)

A. He did.

Q. 5. About what time, if you remember—what month in that year?

A. About the last week in August.

Q. 6. What was he doing?

A. Running a steam-engine—sawing wood.

Q. 7. Was he working on regular time?

A. Yes, sir; he was working on regular time.

Q. 8. Do you know whether he made any extra time or not at that time?

A. He did.

Q. 9. Do you know about how much time he claimed to have made?

(Counsel for Marsh objects to the question as not surrebutting; there is no evidence here that Mr. Henry claimed any extra time.)

A. About three days.

Q. 10. Did he say anything to you about this extra time?

(Objection repeated by counsel for Marsh; and, further, not properly impeaching, as Mr. Henry's attention has not been called to any statements made to this or any other witness.)

A. He did.

Q. 11. When did he speak to you about it?

(Objection repeated by counsel for Marsh.)

A. Very soon after he completed sawing wood—within a day or two.

Q. 12. When was that, about? Give the date as near as you can.

(Objection repeated by counsel for Marsh.)

935 A. The dates, as near as I can remember them, was between the middle and last of August.

Q. 13. Did he afterwards tell you or not whether he had been paid for this extra time?

(Objection repeated by counsel for Marsh.)

A. He did.

Q. 14. When was that?

(Objection repeated by counsel for Marsh.)

A. That was between the 1st and middle of September.
Q. 15. In 1880?
A. In 1880.
Q. 16. He told you, did he, that he had been paid at that time for the extra work done in the previous month?

(Objection repeated by counsel for Marsh; also as leading.)

A. He did.
Q. 17. You say there was about three days' extra time, do you, that he claimed?

(Objection repeated by counsel for Marsh; also that the question is leading.)

A. That was the amount as near as I can recollect.

Direct examination closed.

Without waiving any objections counsel for Marsh proceeds to the cross-examination of witness, WILLIAM D. ROGERS:

Cross-examination:

Cross-Q. 1. Mr. Rogers, did you then have a gang of men in your charge?
A. I did.
Cross-Q. 2. Did you keep their time?
A. I did.
Cross-Q. 3. Did you keep Mr. Henry's time?
A. I did not.
Cross-Q. 4. Did you keep his extra time?
A. I did not.

[On the margin: Why?]

Cross-Q. 5. Wasn't that wood-sawing done in the month of July, 1880?
936 A. No, sir.
Cross-Q. 6. When did you first begin to saw wood that year?
A. I couldn't state that, for we sawed wood several times in the year.
Cross-Q. 7. Did you saw any that year in July at all?
A. I have no recollection of sawing any that year in July.
Cross-Q. 8. Did you have charge of the wood-sawing that year?
A. I did.
Cross-Q. 9. Did you saw any in September?
A. I have no recollection of sawing any in September.
Cross-Q. 10. Have you any or did you keep any account of the wood-sawing at all?
A. I have no record and kept no record of it.
Cross-Q. 11. How many times did he ever run the engine to saw wood for you?
A. I don't recollect of his ever running it but for that one job.
Cross-Q. 12. How long was that before the works started up?

A. Nearly a month; I should think in the neighborhood of a month.

Cross-Q. 13. How long did that wood-sawing last?

A. I should think it covered about a period of about two weeks.

Cross-Q. 14. Whereabout was it?

A. It was near our warehouse.

Cross-Q. 15. You mean the large building back of the office?

A. Not next back of the office—the large building in the rear of all the works.

Cross-Q. 16. On which side of it?

A. On the west side.

Cross-Q. 17. That would be toward the office, wouldn't it?

A. No, sir.

Cross-Q. 18. Which way does the building stand?

A. Nearly north and south.

937 Cross-Q. 19. That would be the side, then, farthest from the Grand Trunk railroad, wouldn't it?

A. It would be.

Cross-Q. 20. Were you sawing continuously and steadily during that two weeks?

A. I can't recollect of any interruption to the sawing.

Cross-Q. 21. Well, can't you say positively whether you were or were not?

A. I can say that I don't recollect of any interruption; that is as near as I can say. There might have been a rain-storm which laid the men off an hour or two, but I don't remember of any.

Cross-Q. 22. In what capacity was Henry at work there? What was he doing?

A. He was firing and running the engine.

Cross-Q. 23. How large an engine was it?

A. A threshing engine—a farm engine.

Cross-Q. 24. About a ten horse power?

A. Yes.

Cross-Q. 25. How long did it take to get up steam on it?

A. Probably it would take an hour.

Cross-Q. 26. What was this extra time for?

A. It was for work he claimed he did early in the morning, before seven o'clock, in getting the engine ready and cleaning it after work was done.

Cross-Q. 27. How long would that take—cleaning?

A. He might spend from a half an hour to an hour to a very good advantage in getting the fire out and cleaning it.

Cross-Q. 28. Did he have any assistance?

A. No.

Cross-Q. 29. Are you accustomed to the charge of engines of this class?

A. I have had some experience with them.

Cross-Q. 30. Then in running an engine of this kind, just before the close of the work it is doing, don't they let the fire go down and run it out as far as possible?

A. I should hardly think they would do that. It is necessary to keep speed and power up to working pitch as long as working time lasts.

938

Cross-Q. 31. Now, can't you pull the fire out of one of those engines with the boiler fairly filled with hot water and steam pressure up to the proper working degree and have it run and do work for some time, say a half hour, more or less?

A. I couldn't.

Cross-Q. 32. You have got to keep fire up in the furnace up to the last moment, have you?

A. I always did.

Cross-Q. 33. You can't give us the date when you begun that wood-sawing?

A. Not the exact date any nearer than I have.

Cross-Q. 34. Do you know whether you begun in the third or fourth week in August in that year?

A. I should think it must have been the third.

Cross-Q. 35. Why must it have been the third?

A. In order to cover the period of time that we were occupied in sawing that amount of wood.

Cross-Q. 36. Do you know what day of the week it was?

A. I do not.

Cross-Q. 37. Do you know what day of the week you got through?

A. I do not.

Cross-Q. 38. Do you know what day of the month it was you got through?

A. I do not.

Cross-Q. 39. Do you know whether it was in August or September that you got through?

A. Only this much, that it must have been near the end of August or beginning of September.

Cross-Q. 40. Well, why must it have been the last of August or the beginning of September?

A. Because we finished sawing wood about the time the shops shut down; that is what calls it to my mind.

939

Cross-Q. 41. Do you know whether you finished before or after the shops shut down?

A. I couldn't say as to the exact day; I know the time was nearly the same.

Cross-Q. 42. Who did you have working with you besides Henry?

A. The usual yard hands, Perry Sanford, Wm. Woodlin; I can't remember the names of all the men I had just then. I don't recollect how many men we did have while we were there.

Cross-Q. 43. Well, state as near as you can about how many.

A. Probably had ten men.

Cross-Q. 44. A part of the shops shut down a week before the rest did that year, didn't they?

A. I don't recollect particularly about that.

Cross-Q. 45. Was there any controversy over these three days' extra time?

A. There was some.

Cross-Q. 46. How long did that controversy last?

A. Several days. I couldn't state the number of days—a few days.

Cross-Q. 47. Who was it with?

A. He asked me for it first; I referred him to the foreman of his department.

Cross-Q. 48. Why didn't you grant the time or certify to it?

A. I told him I thought it was his foreman's place to put his time in; that if I had a man I always kept his time. He was a borrowed man.

Cross-Q. 49. How did his foreman know anything about how much time he had put in?

A. He made his time-roll out and asked me if it was correct.

Cross-Q. 50. Did he allow him for extra time in making out the time-roll?

A. I think not.

940 Cross-Q. 51. Did you tell him the time-roll was correct?

A. I don't recollect of ever speaking with his foreman about the matter.

Cross-Q. 52. I thought you said just now that the foreman asked you if it was correct.

[On the margin: See C. Q. 49.]

A. You misunderstood me. I said he would have done, or, if he had, I would have told him whether it was correct or not.

Cross-Q. 53. Did you see Henry work this overtime?

A. Not all of it.

Cross-Q. 54. How much of it?

A. Generally a few minutes before seven in the morning I would see him there.

Cross-Q. 55. You don't know, then, whether he worked three extra days or not, of your own knowledge?

A. No.

Cross-Q. 56. You don't know whether he was paid for extra time or not, of your own knowledge?

A. Only that he admitted to me that he got his pay.

Cross-Q. 57. What were you doing on the 8th of September, 1880?

(Counsel for Nichols, Shepard & Co. objects to the question as not proper cross-examination.)

A. I don't remember.

Cross-Q. 58. Do you know who you had to work with you there?

(Objection repeated.)

A. I couldn't name them all.

Cross-Q. 59. Were Perry, Sanford, and Woodlin borrowed men?

(Counsel for Nichols, Shepard & Co. objects to the question as not proper cross-examination and entirely immaterial.)

A. No, sir.

Cross-Q. 60. Didn't they have the same foreman that Henry did?

A. No, sir.

941 Cross-Q. 61. Did you report their time?

(Objection repeated.)

A. Their names were on my roll, and I reported whatever time they made.

Cross-Q. 62. Were there any other men about the shops of those names that you know of?

(Objection repeated by counsel for Nichols, Shepard & Co.)

A. I don't remember any.

Cross-Q. 63. Were those men at work with you constantly while you were sawing that wood?

(Objection repeated.)

A. I merely refer to these men because they were my steady yardmen.

[On the margin: Pain's rolls show Henry worked 8 days after yardmen mentioned quit.]

Cross-Q. 64. Question repeated.

(Objection repeated.)

A. I couldn't undertake to say whether any of those men had lost a day during that time or not.

Cross-Q. 65. Well, were they with you when you were sawing that wood?

A. I was not sawing the wood.

Cross-Q. 66. Who was?

A. John Henry and the yardmen.

Cross-Q. 67. Under your charge?

A. Yes, sir.

Cross-Q. 68. Now, I want to know who the yardmen were that were with John Henry in that wood-sawing job.

A. I can't tell who they were, but I could probably find out.

Cross-Q. 69. Didn't you swear that Perry, Sanford, and Woodlin were in the job with some others, but how many you didn't recollect?

A. I did for this reason, that they were the men most likely to be called on to do that work.

[On the margin: What is his oath good for to swear in that way? See C. Q. 42.]

Cross-Q. 70. Is that the basis of all your testimony here?

A. I think not.

Cross-Q. 71. Now, of your own knowledge can you name

942 a single man that you can say positively worked with John Henry on that job of wood-sawing?

A. No.

Cross-Q. 72. During that time of sawing that wood did you make regular returns of yardmen's time—that is, a regular time-roll?

A. I did.

Cross-Q. 73. Do you know whether John Henry worked any after that wood-sawing job was finished?

A. I don't recollect it.

Cross-Q. 74. You mean to say you don't know? Is that what you mean?

A. I don't recollect of his working.

Cross-Q. 75. Well, can you swear positively that he didn't?

A. No.

Cross-Q. 76. How is it that you so distinctly remember about Henry and can't remember definitely about anything or anybody else?

A. I remember him because I borrowed him to my regular force. That is all that calls him to my mind.

[On the margin: It is stated that he was discharged.]

Cross-Q. 77. Why should you borrow him?

A. My work was such that I couldn't attend to it myself, and none of my hands were competent to run the engine. In such cases I ask the superintendent for a man. That was the case at that time.

Cross-Q. 78. Now, at about that time hadn't they sent you off to look after agents, &c., and weren't you away a good deal?

A. I remember of being here at that time, anyway.

Cross-Q. 79. How much of it?

A. All of it, as near as I can remember anything about it.

Cross-Q. 80. Now, won't you look through this "Exhibit Franklin T. Roberts No. 5" and point out by number your time-rolls?

A. There are none there.

Cross-Q. 81. Do you know how much wood was cut up at that time?

943 A. I should think there was between two and three hundred cords.

Cross-Q. 82. What did you do during the month the shops were shut down?

A. I had my various duties to look after. I couldn't state. I have so many things to look after—lumber to look after; wood to look after, etc.

Cross-Q. 83. And you state as to the time when this wood was sawed, to the best of your recollection?

A. I do; yes.

Cross-Q. 84. How far were they sawing wood from what is called engine shop No. 1.

A. Not over ten rods, I should think.

Cross-Q. 85. How many times that year did you saw wood? I mean how many different jobs, not different days.

A. I don't know.

Cross-Q. 86. When did you saw wood the next year? Do you recollect?

A. I don't.

Cross-Q. 87. When was this matter first called to your attention?

A. I couldn't say when. I couldn't give any date; don't recollect.

Cross-Q. 88. Can't you tell whether it was a year ago or six months?

A. It was within six months.

Cross-Q. 89. Who talked with you about it?

A. Mr. Hoag.

Cross-Q. 90. And it was talked over about Henry's extra time, and there being a dispute and about what Henry had claimed, &c., was it?

A. Yes, sir.

Cross-Q. 91. I don't suppose you had thought of it from the time the work was done up to the time Mr. Hoag had talked with you, or you could remember more distinctly about the circumstances?

A. I couldn't say as to that. Of course, if a man asks
944 me about certain things I call upon my memory to recall everything I could in connection with it.

Cross-Q. 92. Well, had you thought of it from the time the work was done up to the time Mr. Hoag spoke to you?

A. I can't remember that I ever paid any particular attention to it; thought of it, anyway.

By consent an adjournment taken until 2 o'clock p. m. May 18, 1883, at the office of Nichols, Shepard & Co.

E. M. CONVERSE,
Notary Public.

At the office of Nichols, Shepard & Co., in the city of Battle Creek, Michigan, May 18th, 1883, at 2 o'clock p. m., the taking of depositions resumed in pursuance of adjournment.

Cross-examination of witness, WILLIAM D. ROGERS, continued by Mr. PARKER, counsel for Marsh:

Cross-Q. 93. Was not your conversation with Mr. Hoag within the last week or two or not?

A. Yes; he spoke with me once within that time.

Cross-Q. 94. Was that the conversation you referred to in your previous testimony?

(Counsel for Nichols, Shepard & Co. objects to this and previous question as immaterial.)

A. It is.

(Witness shown "Exhibit Andrew Thomson No. 1" and asked:)

Cross-Q. 95. Point out in this engraving the warehouse referred to near which the wood-sawing spoken of was done.

(Counsel for Nichols, Shepard & Co. objects to the question or any examination being made on this paper.)

A. (Witness marks building marked "warehouse" "W. D. R.")

945 Cross-Q. 96. The south end of the warehouse is the end with the word "warehouse" on it in the drawings?

A. Yes, sir.

Cross-Q. 97. Does the firm send you to look after engines?

A. They do not. They haven't done so in several years.

Cross-Q. 98. Was this a new or an old engine that was sawing wood?

A. I think it was a second-hand engine.

Cross-Q. 99. Do they take as much pains in wiping up a second-hand engine as they do a new one in use?

A. That would depend altogether upon the amount of pride a man took in the work he was doing.

Redirect examination *for* witness, WILLIAM D. ROGERS, by counsel for Nichols, Shepard & Co.:

Redirect Q. 1. How do you keep the time of the men working under you?

(Counsel for Marsh objects to the question as immaterial.)

A. On a sheet; each man's name in a column of names at the left of the sheet, with blank colunms for the days of the week and each man's amount of work, in hours, for each day. I set the time down in each column as it is worked.

Redirect Q. 2. Did you keep the time in this manner in 1880?

A. In the same manner, with the exception of the sheet. I used a book.

Redirect Q. 3. Do you know where that book is?

A. I do not.

Redirect Q. 4. Who generally did this kind of work you say Henry did—firing up the engine?

A. I did.

Redirect Q. 5. Why didn't you do it at that time?

A. I was kept busy at other work and hadn't time to attend to it.

Recross-examination of witness, WILLIAM D. ROGERS, by counsel for Marsh:

946 Recross-Q. 1. What did you do with that book in which you kept the time?

A. I think it is lying in the office here somewhere, the remains of it. Those books that I carried to keep time in went to pieces in my pocket and became dilapidated, so that I couldn't keep them serviceable.

Recross-Q. 2. Question repeated.

A. I don't know.

Recross-Q. 3. Don't you know whether you turned it into the office or not?

A. I don't know.

Recross-Q. 4. How did the office get any report of the time unless you turned it in the office?

A. I gave it to the time-keeper and took it from him again.

Recross-Q. 5. Did you have extra time allowed when you were firing the engine in doing this kind of work?

(Counsel for Nichols, Shepard & Co. objects to the question as not proper recross-examination.)

A. No, sir.

Recross-Q. 6. Is a man likely to spend an hour every night cleaning up a second-hand engine that he didn't run regularly?

A. If he was anxious to make all the overtime and get pay for it I think he would.

Recross-Q. 7. Now, do you think that a reasonable time to spend under those circumstances?

A. Under the circumstances connected with that engine, I think a man could use that amount of time to a good advantage.

Recross-Q. 8. Well, what particular circumstances were they that would take that time?

A. The engine stood very close to a large amount of valuable lumber that was very dry, also a large amount of dry wood on the other side of the engine, very near the large warehouse, and he was urged to take great precautions and see that everything was
947 wet down thoroughly, no fire left that the wind could carry into any of the buildings or lumber.

Redirect examination of witness, WILLIAM D. ROGERS, by counsel for Nichols, Shepard & Co.:

Redirect Q. 1. Why don't you make extra time?

A. I work by the year.

WM. D. ROGERS.

Subscribed and sworn to before me this 18th of May, 1883.

EUGENE M. CONVERSE,
Notary Public.

Charles H. Hicks.

CHARLES H. HICKS, produced as a witness and being first duly sworn, does depose and say, in answer to interrogatories proposed to him by ALEX. MAHON, Esq., counsel for Nichols, Shepard & Co., as follows, to wit:

Direct Q. 1. State your name, age, residence, and occupation.

A. Charles H. Hicks; age, 39 years; Battle Creek, Michigan; clerk.

Q. 2. By whom are you employed?

A. Nichols, Shepard & Co.

Q. 3. Were you in their employ in the year 1880?

A. Yes, sir.

Q. 4. Did you make any time-slips during the months of August and September, 1880?

A. Yes, sir.

Q. 5. Please examine paper now handed you, "Exhibit Franklin T. Roberts No. 5," and state, if you know, what it is.

A. Yes, sir.

Q. 6. Please state, as far as you know, what it is.

A. Time-sheets in which time is kept of men working in and about the factory of Nichols, Shepard & Co.

948 Q. 7. Please examine slip "No. 8, E. M. C.," and state, if you know, who made that particular slip.

A. Yes, sir.

Q. 8. Who made it?

A. I did.

Q. 9. Please examine the time marked opposite the name Ethridge, and explain, if you can, what the note made therein means.

(Counsel for Marsh objects to the question, as the paper shows for itself, incompetent, and not surrebutting.)

A. The note Friday night means that his time was taken up to Friday night, being six (6) days that he had worked up to that time.

Q. 10. Do you know whether all that work was done in that week, or was any of it done in the previous week?

A. There must have been a part of it done the previous week.

(Counsel for Marsh moves to strike out the answer as not responsive.)

Q. 11. Please examine paper now handed you (paper offered and notary requested to mark the same for identification as "Hoag's Exhibit Charles H. Hicks No. 1," and same so marked by notary "Hoag's Exhibit Charles H. Hicks No. 1") and state if you know what it is.

A. Time-sheets or time-slips, on which the time of the employees in and about the works of Nichols, Shepard & Co. are kept.

Q. 12. On what dates?

A. From February 5th to March 20th, 1880.

Q. 13. Referring to "Franklin T. Roberts No. 5," when was the time made—the date—*i. e.*, opposite the name of Ethridge?

(Counsel for Marsh objects to the question as not surrebutting. We have raised no question as to where Ethridge worked.)

A. The work was done between September 4th and September 18th, 1880.

949 (Counsel for Nichols, Shepard & Co. offers papers marked "Hoag's Exhibit Charles H. Hicks No. 1" in evidence.

Counsel for Nichols, Shepard & Co. is asked by counsel for Marsh to state what he proposes to prove by these time-rolls, as counsel for Marsh does not desire to cross-examine upon any immaterial matter.

Counsel for Nichols, Shepard & Co. states that he introduces these time-slips to show the different times to cover different periods covered by the books; to show how the time was kept at different times.

Counsel for Marsh objects to the introduction of the papers—time-slips—on the grounds stated, as well as not surrebutting, for incompetency, irrelevancy, and immateriality.)

CHAS. H. HICKS.

The above deposition of Charles H. Hicks was taken, subscribed, and sworn to before me this 18th day of May, A. D. 1883.

EUGENE M. CONVERSE,

Notary Public.

Andrew Thomson.

ANDREW THOMSON, produced as a witness on behalf of Nichols, Shepard & Co. and being first duly sworn, does depose and say, in answer to interrogatories proposed to him by ALEX. MAHON, Esq., counsel for Nichols, Shepard & Co., as follows, to wit:

Direct Q. 1. Are you the Andrew Thomson who before testified in this case?

A. Yes, sir.

Q. 2. Do you know or not whether any windows were washed in your shop during the first part of September, 1880, or during the first two weeks of that month?

(Counsel for Marsh objects to the question on the ground
950 that the witness has gone over the ground before and has already testified, and that it is not surrebutting.

A. I do know that there was no windows washed.

Q. 3. Was Michael Rainbow to work the latter part of September in the new shop?

(Counsel for Marsh objects to the question as not surrebutting, as leading, not material, and has been fully covered by the previous testimony.)

A. Yes.

Q. 4. What was he doing?

(Objection repeated by counsel for Marsh, except as to being leading.)

A. Getting the forges in order for operation.

Q. 5. Was that before the shop started work for that year?

(Objection repeated by counsel for Marsh.)

A. Yes.

Q. 6. Do you know when he commenced work on those forges?

(Same objection repeated.)

A. About the middle of the week, I should think.

Q. 7. Do you know about what time in the month?

A. About the 30th of the month or the 1st of the month, because the shops started up on or about the 4th; a Monday, I think. That, I believe, is the day the shops started up.

Q. 8. Did John M. Henry ever speak to you about some extra time?

(Counsel for Marsh objects to the question as incompetent, not surrebutting, and Henry's attention has not been called to the conversation, if any.)

A. Yes; several occasions.

Q. 9. About when was that?

A. After he had got through working here that season.

Q. 10. About when was that?

(Same objection repeated by counsel for Marsh.)

A. I couldn't give any date. It must have been during the first week of the shut down.

Q. 11. Do you know what he claimed this extra time for?

951 (Same objection repeated.)

A. Yes.

Q. 12. What was it for?

(Objection repeated by counsel for Marsh.)

A. He was sawing wood, and claimed he got here in the morning at six to fire up the engine and also stayed at night to clean or wipe her off.

Q. 13. Do you know how much time he claimed?

(Same objection repeated.)

A. I do not.

Q. 14. Was he at work in your shop on the 8th of September, 1880?

(Same objection repeated; also that the question is leading, and that witness has fully testified before.)

A. No, sir.

Cross-examination of witness, ANDREW THOMPSON, by counsel for Marsh:

Cross-Q. 1. Since your former testimony who have you talked with about this matter?

(Counsel for Nichols, Shepard & Co. objects to the question as immaterial.)

A. Burt Roberts, Ike Hickman, Ethridge, Hoag, Nichols, E. C., and a dozen others I could mention.

Cross-Q. 2. Talked it over pretty thoroughly?

A. Yes; discussed the matter freely.

Cross-Q. 3. In that discussion did they refresh your recollection about these circumstances?

A. No.

Cross-Q. 4. You remembered it all before, did you?

A. I do—to the part I testified to.

Cross-Q. 5. You are just as certain about that as you are that in September 8th, 1880, you were foreman in place of Griffin?

A. Yes, sir.

Cross-Q. 6. Any more certain?

A. No.

Cross-Q. 7. Do you know whether Henry was around those
952 shops or not of that week of September 11th?

A. Yes sir; he was.

Cross-Q. 8. Now, as a matter of fact within your own knowledge, do you know that he didn't pull the belt and help Marsh make that

stop? I don't want hearsay or supposition, but your own knowledge on the matter.

(Counsel for Nichols, Shepard & Co. objects to the question as not being proper cross-examination.)

A. I do not believe he was there.

Cross-Q. 9. Question repeated.

(Objection repeated.)

A. I have no knowledge of his being there at all. If the man had worked at that time and in that place, not twelve feet from where I was at work all that day, I should certainly have remembered him being there.

[On the margin: See p. 59, C. Q. 35. Don't know what he was doing.]

Cross-Q. 10. We don't want your inferences nor arguments nor evasions, and I repeat the question.

(Objection repeated by counsel for Nichols, Shepard & Co.)

A. Then I don't understand the question.

Cross-Q. 11. Is that the reason you don't answer it?

A. No; because I have already answered it to the best of my ability.

Cross-Q. 12. You think he must have worked within twelve feet of you, do you, that day?

(Counsel for Nichols, Shepard & Co. objects to question as misleading and not proper cross-examination.)

A. If you mean John Henry, no.

Cross-Q. 13. Don't you mean to say that if he worked there on that job he must have worked within twelve feet of you?

(Objection repeated by counsel for Nichols, Shepard & Co.)

A. Yes.

Cross-Q. 14. Now, what were you doing on the 8th day of September, 1880, on the afternoon of that day?

A. Cutting a keyway for a coupling.

953 [On the margin: See proceedings, page 8, p. 39.]

Cross-Q. 15. When did you commence that job cutting that keyway?

A. That was the first job I done.

Cross-Q. 16. Question repeated.

A. About the fourth or fifth; don't remember exactly the day; somewheres along there.

Cross-Q. 17. How long a keyway was it?

A. About eight (8) inches long, an inch and a quarter (1¼) wide, and I should say a half (½) inch deep.

Cross-Q. 18. When did you get through cutting it—finish it?

A. In about two days; probably more.

Cross-Q. 19. How do you know but what you had finished it on the afternoon of the 8th of September?

A. I may have finished cutting the keyway on that day, but the key had to be fitted, forged, the coupling put on, driving pulley to be moved; all that work had to be done right in the same place and all within a space of four (4) feet.

[On the margin: Quit.]

Cross-Q. 20. Has Ethridge refreshed your recollection about that?

A. No, sir.

Cross-Q. 21. Haven't you sworn that you didn't remember what you were doing on that day?

A. Not that I know of; I may have mentioned that day in that week, that first week.

Cross-Q. 22. If you did swear that you did not remember what you were doing on that particular day, it wasn't true, was it?

A. Repeat that question.

(Question re-read to witness.)

A. I don't know as I swore that way—that I didn't remember what I was doing on that day.

Cross-Q. 23. Do you say that you did not swear so, or don't you remember?

A. I remember what I was doing the first week in September—the first two weeks in September.

954 Cross-Q. 24. Question repeated.

A. I don't remember.

Cross-Q. 25. Did you remember when you was on the stand last week what you were doing on that particular day?

A. Yes, sir.

Cross-Q. 26. Now, is your memory any better as to what occurred on that particular day than it is as to what you swore to here last week?

A. Yes, sir.

Cross-Q. 27. And you are sure that you remembered last week, when on the stand, what you were doing on the 8th of September, 1880?

A. Yes; because I classified that 8th day amongst the days that I was doing that particular work and was on that job. I never lost an hour until the job was done.

Cross-Q. 28. Why do you remember that so distinctly now?

A. Because we were coupling the new shops to the old shops, and we done that the first thing, so that everything would be all right to go to work.

Cross-Q. 29. But the new shops weren't done until later in the season, were they?

A. I think the roof was on; they were about completed, so far as the building was concerned.

Cross-Q. 30. I now call your attention to cross-question 35 and the answer there, in your previous testimony, as follows: "Have you any recollection of what you were doing on the 8th of September,

1880?" and you answered, "Not on that particular day." You really didn't mean to tell what was not true, did you?

A. No, sir.

Cross-Q. 31. Then if you did remember, why did you say you didn't?

A. Because I classified that day in that week while I was on that job.

Cross-Q. 32. Did Hoag and Ethridge assist you on that job?

955 A. Yes, sir; several times.

Cross-Q. 33. Did Ethridge work with you all the time?

A. Not with me particularly.

Cross-Q. 34. I call your attention to cross-question 40, in your former testimony, question as follows: "Do you now recollect what jobs of repairing you were doing in that shop on that day?" and your answer, "I do not, on that particular day." Now, if you did remember, why didn't you say so?

A. I may have done something else on that particular day; I may have forged the key on that day.

Cross-Q. 35. Do you recollect forging the key?

A. I recollect having something to do with it. I may have acted as blacksmith or blacksmith's helper.

Cross-Q. 36. At what forge?

A. The portable forge, hand forge.

Cross-Q. 37. Weren't there any other forge at that time at which forging could be done?

A. Not without steam-power.

Cross-Q. 38. If I understand, the engine was not running, so that it was impracticable to use any other forge but the portable forge in forging?

A. Yes; a man could forge a key without the portable forge.

Cross-Q. 39. Where?

A. Heat it hot in a stove, or on the brick forge, by building a wood fire; but we wouldn't do that, of course, as long as there was a portable forge in the institution.

Cross-Q. 40. And now do you know whether as a fact any forging was done anywhere else around the shops at that time except what was done at the portable forge?

A. No, sir; I do not.

Cross-Q. 41. While you were at work there on that keyway and other work men must have been coming in and going out of the shops continually or frequently, were they not?

A. Yes.

956 Cross-Q. 42. Do you remember all of them that came in there and went out again?

A. No; only those I were acquainted with, formerly employed before shutting down.

Cross-Q. 43. Do you remember what each one did?

A. I do if they were working.

Cross-Q. 44. Why would you remember?

A. Well, I might have got down and talked with them; I may have been out-doors and some one come in and pick up something.

Cross-Q. 45. Do you remember of every little job that a man did or would do in that shop during the time you were cutting that keyway, &c.?

A. No, sir.

Cross-Q. 46. Do you remember Marsh coming in there and getting any forging done about that time?

(Counsel for Nichols, Shepard & Co. objects to the question as not proper cross-examination.)

A. No; he was there constantly every day; I couldn't notice what he was doing; he was there all the time.

Cross-Q. 47. Don't you remember that he came in there and had a stop plate forged?

[On the margin: Stop plate was forged at that shop, and yet these men don't know anything about it.]

(Objection repeated.)

A. No.

Cross-Q. 48. What particular work was Rainbow doing to those forges?

A. In order to get the wind in the tuyere irons there has to be pipes connected, valves put in; also plates to brace the forge. That is all that I have any recollection of.

Cross-Q. 49. Some bolts to make, weren't there?

A. We have various lengths of bolts here, and he may have had to cut one in two, but I don't recollect anything of that kind.

Cross-Q. 50. Well, isn't this iron-work bolted through the brick-work?

A. Yes; from one plate to another.

Cross-Q. 51. When was that brick-work put up?

957 A. I couldn't positively say; I think it was at that time.

Cross-Q. 52. Now, wasn't this work of Rainbow's on the forges along the latter part of August?

A. No, sir; it couldn't be.

Cross-Q. 53. Why not?

A. Because I don't think the shop was completed at that time so he could do it. The floor wasn't laid, for instance.

Cross-Q. 54. Do you know where he did that forging—*i. e.*, at what forges?

A. No; I do not.

Cross-Q. 55. The shop was far enough completed the fore part of September so that you were putting in the shafting, weren't they?

A. Yes; when the new shop was built, the roof over it, I was cutting the keyway in the old shop, getting ready to connect with the new shop, but the shafting in the new shop was put up by a man named Seaton, and I merely cut the keyways for him and done the rest of the work on the old line shaft for myself, and it may not have been bolted together until some other time; but the connections was got ready at first.

Cross-Q. 56. Weren't these forges built of brick in connection with the brick-work of the walls of the shop?

A. I think not; nothing but the chimney. The flooring had to be laid for it before they could be completed, before they could be begun even.

Cross-Q. 57. The brick-work was done before the masons got through, wasn't it?

A. The brick-work of the forges wasn't done, wasn't commenced, when the mason got through with the building.

Cross-Q. 58. You really don't remember much about that, do you—it was outside of your department or shop?

A. I was working in that building at the time. I remember the building of them very well.

Cross-Q. 59. Was that before or after you became foreman of No. 2?

A. I had already accepted the position of foreman, but
958 exercised no authority until the starting up of the shops for the following year.

By consent an adjournment taken until May 19th, 1883, at 9 o'clock a. m., at the office of Nichols, Shepard & Co.

E. M. CONVERSE,
Notary Public.

At the office of Nichols, Shepard & Co., at Battle Creek, Mich., May 19th, 1883, at 9 o'clock a. m., the taking of depositions resumed in pursuance of adjournment.

Cross-examination of witness, ANDREW THOMAS, continued by Mr. PARKER, counsel for Marsh:

Present: Counsel for respective parties.

Cross-Q. 60. During the first two or three days of the week ending September 11th weren't you in the engine-room No. 1 continuously?

A. No.

Cross-Q. 61. Weren't you there the most of the time?

A. No.

Cross-Q. 62. Do you recollect who did the brick-work in building those forges that you say Rainbow ironed?

A. Yes; I think Hall, the mason, did that work.

Cross-Q. 63. Henry Hall?

A. It may have been his brother. I think it was one of the Halls.

(Counsel for Nichols, Shepard & Co. objects to both of the last questions as irrelevant and immaterial.)

Cross-Q. 64. Do you know where Rainbow worked when he did that forging for the forges?

A. I do not.

Cross-Q. 65. During the first few days of the week ending September 11th, 1880, weren't you continuously at work in engine shop No. 1—I mean No. 2?

A. I would like to see the exhibit. I have forgot which I marked No. 1 and No. 2. (Exhibit shown witness.) I think so.

959 Cross-Q. 66. You weren't in and out?

A. Yes, sir.

Cross-Q. 67. About how often?

A. Probably once or twice in the forenoon and the same in the afternoon.

Cross-Q. 68. Have you any recollection about what you were in and out for on the 8th of September?

A. No.

Cross-Q. 69. Have you any recollection about how much time you spent out of the shop?

A. Probably five (5) or ten (10) minutes.

Cross-Q. 70. Don't give me probabilities. Answer, if you have any recollection, how much time you spent.

A. No.

Cross-Q. 71. Whereabouts in that shop were you at work?

A. On the line shaft.

Cross-Q. 72. Well, where was that?

A. At the north end of the building; the end toward building No. 1.

Cross-Q. 73. How long is that shop?

A. I don't know.

Cross-Q. 74. About how long?

A. About 85 feet.

Cross-Q. 75. About how wide?

A. About 40 feet.

Cross-Q. 76. Pretty well filled with drills and planers and other tools at that time?

A. Yes; around the sides of the building. The center of the floor was all clear.

Cross-Q. 77. The shafting was overhead?

A. Yes.

Cross-Q. 78. This coupling you were making was at the west end, to connect with the line shafting in No. 1, if I understand you?

A. Yes.

960 Cross-Q. 79. Were you putting up a cross line of shafting between the two buildings at that time, the first two or three days of the week ending September 11th?

A. I was not.

Cross-Q. 80. Was any one under your direction?

A. No.

Cross-Q. 81. Was any one?

A. Not that I remember of.

Cross-Q. 82. You are not certain about it, then?

A. No.

Cross-Q. 83. Was there any one at work in No. 2 putting up shafting, lining up, or getting ready to line up to fix the shafting during that time?

A. Yes.

Cross-Q. 84. What were they doing on the 8th of September?

A. I couldn't say.

Cross-Q. 85. Who was it?

A. Seaton and his men. I don't know their names; don't remember their names.

Cross-Q. 86. Had they got up a scaffolding for that purpose?

A. No scaffolding, only what I used myself; that I put up.

Cross-Q. 87. You spoke of forging a key yesterday. Do you know whether you forged it or not?

A. Yes; I assisted at its forging.

Cross-Q. 88. Who did you assist?

(Counsel for Nichols, Shepard & Co. objects to all those questions as being irrelevant and immaterial.)

A. Edgar Ethridge.

[On the margin: E. is not the mythical blacksmith.]

Cross-Q. 89. Was it forged at that portable forge you have mentioned?

A. Yes.

Cross-Q. 90. Who else did any forging there that week?

A. The boiler-maker; several of them.

Cross-Q. 91. Who were they?

A. I do not know the name; they belong to Detroit.

961 Cross-Q. 92. Brennan or Brennan's foreman and some of his men?

A. Some of Brennan's men.

Cross-Q. 93. Do you know Brennan by sight?

(Counsel for Nichols, Shepard & Co. objects to the question as irrelevant and immaterial.)

A. Yes.

Cross-Q. 94. Do you know whether he was there or not?

A. He was there during the time they were fixing the boiler.

Cross-Q. 95. How long were they at that job?

(Objection repeated by counsel for Nichols, Shepard & Co.)

A. Three or four weeks; about a month.

Cross-Q. 96. They were there, then, during that week of September 11th, if I understand you?

A. Yes.

Cross-Q. 97. Who else did any forging there that week?

(Objection repeated.)

A. Not anybody.

Cross-Q. 98. Well, do you state positively or to the best of your recollection about that?

A. Well, yes; to the best of my recollection.

Cross-Q. 99. Do you know who did the forging for Brennan? Brennan's men?

A. Yes.

Cross-Q. 100. Who was it?

A. The men themselves.

Cross-Q. 101. Well, do you mean all of them or any one of them particular; the best of your recollection generally?

(Counsel for Nichols, Shepard & Co. objects to question as irrelevant and immaterial.)

A. No. I think they used to dress their own tools generally—their chisels.

Cross-Q. 102. Do you recollect whether or not Mr. David Shepard was in that shop at any time during the 8th of September?

962 (Counsel for Nichols, Shepard & Co. objects to the question as not proper cross-examination.)

A. He was there every day, but I wouldn't specify that day in particular. He was around there every day.

Cross-Q. 103. In cutting that key-seat were you above where the shafting was or on the ground?

A. The shafting would be about on a line with my face.

Cross-Q. 104. It had been taken down, then, from where it runs, hadn't it?

A. Oh, no; it is too large and heavy for that. That shaft is four (4) inches in diameter.

Cross-Q. 105. Was it afterwards put higher? Just explain how it is or was; that is what I want.

A. No; the shafting is probably 12 feet high from the ground; the keyway cut on the end for this coupling, to couple those two shops together. It wasn't necessary to take down that piece of shafting, so we simply moved the driving pulley along on the shaft far enough to get a stroke of the hammer, to cut it in its own place—own bearings—and I was standing upon the staging, at work at it.

Cross-Q. 106. When was the staging built, and who by, and how far did it extend through the shop?

A. About one or two days after the shutting down; by myself. It was about four (4) feet long—that is all.

(Counsel for Nichols, Shepard & Co. objects to all cross-examination of the witness not based upon the direct examination or covered by the direct examination, and will move to exclude the same.)

ANDREW THOMSON.

Subscribed and sworn to before me this 19th day of May, A. D. 1883.

EUGENE M. CONVERSE,
Notary Public.

963 *Hiram Pittee.*

HIRAM PITTEE, produced as a witness, and being first duly sworn by me, does depose and say, in answer to interrogatories proposed to him by ALEX MAHON, Esq., on behalf of Nichols, Shepard & Co., assignees, &c., as follows, to wit:

Direct Question 1. State your name, age, residence, and occupation.

Answer. Hiram Pittee; my age is 68 years; Battle Creek, Michigan; I work at the threshing machine works.

Q. 2. By whom are you employed?

A. Nichols, Shepard & Co.

Q. 3. How long have you been in their employ?

A. Nineteen years.

Q. 4. State whether in your settlements with them for wages you have found their pay-rolls and books of account correct or not?

(Counsel for Marsh objects to the question as incompetent and immaterial, on the ground that admitted mistakes in the books and pay-rolls can't be proven to be correct by such testimony; also that Nichols, Shepard & Co. cannot impeach their own testimony; also that it is not rebutting.)

A. Always.

Q. 5. State whether, in your opinion, they keep correct pay-rolls and books of account or not.

(Objection repeated by counsel for Marsh, and, further, that his opinion is not competent in any way, he not being shown to be an expert.)

A. I should think they did; they always have with me.

Q. 6. Who has been paying you off for the last five or six years?

(Objection repeated so far as applicable by counsel for Marsh.)

A. George Barrows, or Bowers, the paymaster here. I don't exactly know his last name. George Barrows, I guess.

964 Q. 7. Have you always found he has kept your account correct?

(Same objection repeated, and also as leading.)

A. I have, sir.

Without waiving any objections counsel for Marsh proceeds to the cross-examination of witness, HIRAM PITTEE:

Cross-Q. 1. (Referring to the labor record, page 317, "farmer's room No. 3," and to the name Pittee, opposite that name under the heading "time.") Will you just tell me whether that is two and seven-tenths days or two and eight-tenths days?

A. I should think it was two and an eighth. It is a "two" and an "eight," at any rate.

Cross-Q. 2. Well, which is correct—two and seven-tenths or two and eight-tenths?

A. Well, I couldn't tell you exactly in regard to that, sir. That I can't say.

Cross-Q. 3. That is your record for that week, isn't it?

A. I should think it was.

HIRAM PITTEE.

Taken, subscribed, and sworn to before me this 19th day of May, A. D. 1883.

EUGENE M. CONVERSE,
Notary Public.

Alson Evans.

ALSON EVANS, produced as a witness and being first duly sworn by me, doth depose and say, in answer to interrogatories proposed to him by ALEX. MAHON, Esq., on behalf of Nichols, Shepard & Co., assignees, &c., as follows, to wit:

Direct Question 1. State your name, age, residence, and occupation.

965 Answer. Alson Evans; fifty-three—will be next December; residence, Cherry street, 34; occupation, wood workman.

Direct Q. 2. By whom are you employed?

A. Messrs. Nichols & Shepard.

Direct Q. 3. How long have you been employed by them?

A. Seventeen years about the middle of next month.

Direct Q. 4. State whether in your settlement with them for wages you have found their pay-rolls and books of account correct or not.

(The same objection repeated as was made to the testimony of the last witness.)

A. They have always paid me correct, sir.

Direct Q. 5. Who pays you off, or has for the last five or six years?

(Same objection repeated by counsel for Marsh.)

A. George Barrows.

Direct Q. 6. Have you always found that he kept your time correctly and paid you correctly?

(Objection repeated.)

A. Yes, sir; I have.

Direct Q. 7. How is your first name generally pronounced?

(Counsel for Marsh concedes that witness's name is sometimes called "Allanson," and that his name in his account in the books may be so entered.)

A. I am sometimes called "Allanson."

Without waiving an objection counsel for Marsh proceeds to the cross-examination of the witness, ALSON EVANS:

Cross-Q. 1. Do you mean to say that their time-keepers in keeping your time never made any mistake as to how much time and when it was worked?

A. They have correctly, so far as I know. I know I have always got my pay correct.

Cross-Q. 2. They never made any mistakes which were afterwards rectified?

966 A. There might be some in regard to overtime. Sometimes we work overtime there, and when I was to work with Mr. Burclick he happened to overlook the time, and the next week it would be made right. We would speak to him about it, and

when Mr. Barrows would come around next week we would get our pay all right. It was no fault of Mr. Barrows.

ALSON EVANS.

Taken, subscribed, and sworn to before me this 19th day of May, A. D. 1883.

EUGENE M. CONVERSE,
Notary Public.

George A. Halbert.

GEORGE A. HALBERT, produced as a witness and being duly sworn, doth depose and say, in answer to interrogatories proposed to him by ALEX. MAHON, Esq., on behalf of Nichols, Shepard & Co., as follows, to wit:

Direct Question 1. State your name, age, residence, and occupation.

Answer. George A. Halbert; age, 33; residence, Battle Creek, Michigan; am a machinist.

Direct Q. 2. By whom are you employed?

A. Nichols, Shepard & Co.

Direct Q. 3. State whether or not in your settlements with them for wages you have found their pay-rolls and books of account to be correct.

(Counsel for Marsh repeats the objection to all of this testimony that has already been made.)

A. I have.

Direct Q. 4. Who pays you your wages, or has for the past five or six years?

A. George Barrows.

Direct Q. 5. Have you always found or not that he kept your time correctly and paid you correctly?

967 (Objection repeated by counsel for Marsh.)

A. He has.

Without waiving objections Mr. PARKER, counsel for Marsh, proceeds to cross-examination of witness, GEORGE A. HALBERT:

Cross-question 1. Did you work for Nichols, Shepard & Co. during September, 1880?

Answer. I think not.

Cross-Q. 2. Are you certain?

A. Quite certain.

Cross-Q. 3. Didn't the foreman ever make mistakes on overtime which were afterwards corrected in the next or a subsequent week?

A. He has not with me.

Cross-Q. 4. What, never?

A. Never.

GEO. HALBERT.

Taken, subscribed, and sworn to before me this 19th day of May, 1883.

EUGENE M. CONVERSE,
Notary Public.

(Counsel for Nichols, Shepard & Co. gives notice that he will use in evidence in this case the affidavit made by Michael Rainbow December 12th, 1882, and one of John M. Henry made on the 15th day of December, 1882, and herewith offers certified copies of the same from the records of the Patent Office, and requests the notary to mark the same "Hoag's Exhibits H and I."

Counsel for Marsh objects on the ground that if counsel for Nichols, Shepard & Co. desired to use said Rainbow and said Henry as witnesses that he could have done so; that no effort has been shown to obtain said witnesses, and that counsel for Marsh has had no opportunity to examine or cross-examine the same, which he
968 would have the right to do in case said witnesses were produced by said Nichols, Shepard & Co.; and, further, that they are incompetent, irrelevant, immaterial, and not surrebutting and form no part of the case or testimony for which the order to take the surrebutting testimony was allowed. He further objects on the ground that if said affidavits are offered as the foundation for surrebutting testimony they come entirely too late, as no notice was given and no offer made of the same at the commencement of the taking of said testimony; and, further, that they cannot thus impeach their own witnesses.

Counsel for Nichols, Shepard & Co. states that he introduces these papers as copies of the official records filed in this case on behalf of Marsh under the rule for the use of such papers and the taking and transmitting testimony.)

Papers offered by counsel for Nichols, Shepard & Co. to be marked in evidence as "Hoag's Exhibit No. H" and "Hoag's Exhibit No. I" so marked by me as such exhibits this 19th day of May, 1883.

E. M. CONVERSE,
Notary Public.

By consent an adjournment in this matter taken until 2 o'clock p. m., May 19, 1883, at the office of Nichols, Shepard & Co.

E. M. CONVERSE.

At the office of Nichols, Shepard & Co., in Battle Creek, May 19th, 1883, at 2 o'clock p. m., the taking of depositions resumed in pursuance of adjournment.

(Counsel for Marsh gives notice that Marsh will move the honorable Commissioner of Patents to expunge from the record the testimony of Hoag taken in the so-called rebuttal in behalf of Hoag for reasons already appearing of record, and, further, under the objections already appearing of record, and in the alternative,
969 or if this shall not be deemed practicable, then that Marsh shall be granted the privilege of rebutting said so-called surrebutting testimony taken in behalf of Hoag for the same reasons,

and for the further reason that most, if not all, of the said so-called surrebutting testimony which should have been given when Hoag first had the case, long months ago, is not newly discovered nor responsive to the allegations set up in the affidavits filed in support of the motion to reopen this case nor in accord with the decisions of the honorable Commissioner of Patents therein; and, further, that this so-called surrebuttal of Hoag consists largely of statements to which Marsh has not had as yet opportunity to reply; and, further, that Marsh intends to furnish in due time competent testimony to prove the fallacy of this so-called newly discovered and surrebuttal testimony taken in behalf of Hoag; and Marsh further hereby gives notice of his intention to produce at the hearing and urge consideration of all papers, models, and other evidence he has introduced in evidence in this case.

And, further, that Marsh will then and there move to expunge from the record all testimony tending to modify, contradict, explain, or impeach the books of Nichols, Shepard & Co. and, further, all testimony as to conversations or admissions of Marsh and Henry as not impeaching, incompetent, and not proper surrebuttal. Martin Metcalf, of counsel and attorney for Marsh, asks to have made of record the following statement of facts, to wit: That on concluding the taking of the testimony of the witness Griswold, on Tuesday last, the taking of testimony was announced closed by the notary without any notice to Metcalf, counsel for Marsh—his attention was at the moment taken up in a conversation with Marsh—although said Metcalf did hear Mr. Mahon announce that he had no more witnesses present or words which he, Metcalf, understood to be of that import; that while engaged in such conversation with Marsh counsel for Nichols, Shepard & Co. and Mr. Parker, as counsel for Marsh, were conversing together and conferring, as
970 Metcalf supposed, as to the time to which the taking of testimony might be adjourned so as to accommodate the said attorneys whose residences were not in the city of Battle Creek, it being already well understood that Metcalf would be suited with almost any time that should accommodate said attorneys and the notary, Eugene M. Converse, Esq.; that the first intimation said Metcalf had of the closing of the case was when Mr. Mahon, of counsel for Nichols, Shepard & Co., came to where the said Metcalf and Marsh were conversing, and hand*ing* each a paper notice that Nichols, Shepard & Co. would proceed to take the testimony of certain witnesses, new, in behalf of Hoag, named therein, on Friday morning, as appears of record; that then said Metcalf gave expression to his utter surprise for the obvious reason and for further reasons hereafter appearing. He thereupon refused to acknowledge the service of this new notice because, first, Metcalf, counsel for Marsh, had a right to expect that the taking of testimony would be continued from day to day until completed, according to a previous notice, and especially inasmuch as the record of this entire case shows that Nichols, Shepard & Co. well knew who their witnesses were when they gave their first notice under which this so-called surrebuttal testimony was to be taken, and, further, should have then

named all their witnesses, and especially that they could not consistently claim the right to close the case without consultation with said Metcalf, counsel and attorney for Marsh, who then was and still is ready and anxious that all and every one of the witnesses of Hoag who know anything of this case may go on the stand and testify to all that they may know in legitimate surrebuttal of what Marsh has said, and that, too, without any further and unnecessary delay; further, that, in order to avoid any possible cause of complaint on the part of Nichols, Shepard & Co., Mr. Converse, or anybody else, said Metcalf, counsel for Marsh, waived all and every objection he may have entertained to proceeding with the taking of testi-
971 mony in behalf of Hoag, in the office of Nichols, Shepard & Co., or before the said officer, Eugene M. Converse, Esq.; further, that now, even at this late day and hour, said Metcalf, attorney for Marsh, and said Marsh himself *is* entirely willing that Mr. Andrew J. Hoag and Mr. Edwin C. Nichols, two former noticed witnesses, but for some reasons best known to Mr. Mahon or to them left out of the last notice, be invited to take the witness stand and testify to all and every fact within their own knowledge in legitimate surrebuttal of what Marsh has said.

Counsel for Nichols, Shepard & Co. objects to the statement being made of record by Martin Metcalf, and shall move to exclude the same from the record as not being proper, as will appear from the record of the case.

Counsel for Nichols, Shepard & Co. further objects to his record being lumbered up by statements of Martin Metcalf, and he further objects to Martin Metcalf referring on the record to any witnesses not examined by him, and for this reason also he will move to exclude the entire statement of Martin Metcalf from the record.

Counsel for Nichols, Shepard & Co. here gives notice that he will use at the hearing the affidavit of Constantus G. Case, filed in behalf of Marsh, executed 23d day of May, 1882, and he now offers a certified copy of the same and requests the notary to mark the same as "Hoag's Exhibit K," and he further gives notice that he will read at the hearing the affidavit filed by Edwin C. Nichols, attached to a letter from said C. G. Case, and offers the same in evidence and requests the notary to mark the same "Hoag's Exhibit L;" said papers marked by notary, in pursuance of request of counsel for Nichols, Shepard & Co., "Hoag's Exhibit K" and "Hoag's Exhibit L."

Counsel for Marsh objects to the introduction of the two exhibits just referred to as incompetent, irrelevant to the issue, not surrebutting, and not a proper manner of proving Mr. Case's whereabouts nor a proper mode of authenticating the supposed letter annexed to and made a part of "Hoag's Exhibit L," and for the reasons
972 heretofore stated in objections to the introduction of "Hoag's Exhibits H and I.")

The taking of depositions in this case closed May 19th, 1883, at 3 o'clock p. m.

EUGENE M. CONVERSE,
Notary Public.

In the matter of the interference between the application of Elon A. Marsh for a patent for improvements in reversing gear for steam-engines and the reissued letters patent No. 9951, granted November 29, 1881, to A. J. Hoag, assignor to Nichols, Shepard & Co., now pending before the Commissioner of Patents.

SIR: You are hereby notified that on Friday, May 18th, 1883, at nine o'clock a. m., at the office of Nichols, Shepard & Co., Battle Creek, Mich., before Eugene M. Converse or other duly commissioned officer, I shall proceed to take the testimony of Charles F. Bock, James W. Wood, Charles H. Hicks, Hiram Pittee, Alson Evans, Alfred H. Tichenor, George Halbert, W. D. Rogers, and Andrew Thomson, all of Battle Creek, Mich., as witnesses in surrebuttal in behalf of Nichols, Shepard & Co., assignees of A. J. Hoag; the examination to continue from day to day until completed. You are invited to attend and cross-examine.

Dated Battle Creek, Mich., May 15th, 1883.

Respectfully, NICHOLS, SHEPARD & CO.,
Assignees of A. J. Hoag,
By ALEX. MAHON, *Of Counsel.*

Martin Metcalf.

973 STATE OF MICHIGAN, } ss:
County of Calhoun, }

Personally appeared before me, a notary public in and for said county, Alexander Mahon, who, being duly sworn, deposes and says that he served the above notice upon Martin Metcalf, the attorney and of counsel for said Elon A. Marsh, at eleven forty-five (11.45) o'clock a. m. of the 15th day of May, 1883, by delivering the same to him in person at the city of Battle Creek, county of Calhoun, State of Michigan.

ALEXANDER MAHON.

Sworn to and subscribed before me, at Battle Creek, in the county of Calhoun, State of Michigan, this 15th day of May, 1883.

EUGENE M. CONVERSE,
[SEAL.] *Notary Public.*

Filed with me May 18th, 1883.

E. M. CONVERSE,
Notary Public.

In the matter of the interference between the application of Elon A. Marsh for a patent for improvement in reversing gear for steam-engines and the reissued letters patent No. 9951, granted November 29, 1881, to A. J. Hoag, assignor to Nichols, Shepard & Co., now pending before the Commissioner of Patents.

SIR: You are hereby notified that on Friday, May 18th, 1883, at nine o'clock a. m., at the office of Nichols, Shepard & Co., Battle Creek, Mich., before Eugene M. Converse or other duly commissioned officer, I shall proceed to take the testimony of Charles F. Bock,

James W. Wood, Charles H. Hicks, Hiram Pittee, Alson Evans, Alfred H. Tichenor, George Halbert, W. D. Rogers, and Andrew Thomson, all of Battle Creek, Mich., as witnesses in
974 surrebuttal in behalf of Nichols, Shepard & Co., assignees of A. J. Hoag; the examination to continue from day to day until completed. You are invited to attend and cross-examine.

Dated Battle Creek, Mich., May 15th, 1883.

Respectfully, NICHOLS, SHEPARD & CO.,
Assignees of A. J. Hoag,
By ALEX. MAHON, *Of Counsel.*

R. A. Parker.

STATE OF MICHIGAN, } ss:
County of Calhoun, }

Personally appeared before me, a notary public in and for said county, Alexander Mahon, who, being duly sworn, deposes and says that he served the above notice upon R. A. Parker, the attorney and of counsel for said Elon A. Marsh, at eleven forty-five (11.45) o'clock a. m. of the 15th day of May, 1883, by delivering the same to him in person at the city of Battle Creek, county of Calhoun, State of Michigan.

ALEXANDER MAHON.

Sworn to and subscribed before me at Battle Creek, in the county of Calhoun, State of Michigan, this 15th day of May, 1883.

EUGENE M. CONVERSE,
[SEAL.] *Notary Public.*

Filed with me May 18th, 1883.

E. M. CONVERSE,
Notary Public.

975 STATE OF MICHIGAN, } ss:
County of Calhoun, }

I, Eugene M. Converse, a notary public within and for the county of Calhoun and State of Michigan, do hereby certify that the foregoing depositions of James W. Wood, William D. Rogers, Charles H. Hicks, Hiram Pittee, Alson Evans, George A. Halbert, and Andrew Thomson were taken on behalf of Andrew J. Hoag, assignor to Nichols, Shepard & Co., in pursuance of the notice hereto annexed, before me, at the office of Nichols, Shepard & Co., in the city of Battle Creek, in said county of Calhoun, Michigan, on the 17th, 18th, and 19th days of May, A. D. 1883; that each of said witnesses was by me first duly sworn before the commencement of his testimony; that the testimony of each of said witnesses was written out by myself; that the opposing party, Elon A. Marsh, was present in person and by R. A. Parker, Esq., and Martin Metcalf, his counsel, during the taking — said testimony; that said testimony was taken at the office of Nichols, Shepard & Co., in Battle Creek city, Michigan, and was commenced at 11 o'clock a. m. on the 17th of May,

1883, and was continued, pursuant to adjournment, on the 18th, and was concluded on the 19th of said month of May, 1883; that I am not connected by blood or marriage with either of said parties, nor interested directly or indirectly in the matter in controversy; that the exhibits offered at the taking of the foregoing depositions were by me marked in pursuance of the requests of counsel and are herewith subjoined.

In testimony whereof I have hereunto set my hand and affixed my seal of office at the city of Battle Creek, in said county of Calhoun, this 19th day of May, 1883.

EUGENE M. CONVERSE,
[SEAL.] *Notary Public.*

976 DEPARTMENT OF THE INTERIOR,
UNITED STATES PATENT OFFICE.

To all persons to whom these presents shall come, Greeting:

This is to certify that the annexed is a true copy from the files of this office of affidavit of Constantine G. Case in matter of interference of Marsh *vs.* Hoag.

In testimony whereof I, E. M. Marble, Commissioner of Patents, have caused the seal of the Patent Office to be affixed this 27th day of April, in the year of our Lord one thousand eight hundred and eighty-three, and of the Independence of the United States the one hundred and seventh.

E. M. MARBLE,
[SEAL.] *Commissioner.*

In the matter of the interference between the application of E. A. Marsh, filed September 28th, 1881, and the reissue patent granted Nichols, Shepard & Co., assignees of A. J. Hoag, November 29th, 1881, No. 9951.

CONSTANTIUS G. CASE, being duly sworn, deposes and says that he is a citizen of Battle Creek, Michigan, and was during the year 1880; that he knows of his own knowledge that Michael Rainbow was in the employ of Nichols, Shepard & Co., of said city of Battle Creek, during the year 1880, and that he, Rainbow, was at work in the blacksmith shop of said firm during the time Elon A. Marsh was engaged in the work of applying his reversing gear to one of Nichols, Shepard & Co.'s traction engines on the (7th) seventh and (8th) eighth days of September, 1880, while the said works were shut down and when the machinery was not running, but when
977 many of the employees of said firm were at work, among whom was Michael Rainbow, to the knowledge of this deponent; and further this deponent saith not.

CONSTANTIUS G. CASE.

Subscribed and sworn to before me this 23rd day of May, 1882.

FRANK G. REYNOLDS,
[SEAL.] *Notary Public in and for Calhoun Co., Michigan.*

STATE OF MICHIGAN, } ss:
County of Calhoun, }

I, EDWIN C. NICHOLS, on oath do depose and say that I am a resident of Battle Creek, county of Calhoun, in the State of Michigan; that I am a member of the firm of Nichols, Shepard & Co., of that place, and that said firm are the assignees of Andrew J. Hoag in the matter of his patent for reversing gear for steam-engines, reissued Nov. 29, 1881, and now in interference with the application of one Elon A. Marsh; that on or about the 10th day of September, 1880, I received a letter from one C. G. Cass, to me personally well known, addressed to the said firm from Frankfort, Indiana, on the 8th day of September, 1880, which letter is hereto appended and made a part hereof. I further depose and say that the said Cass is the identical person who, I am informed, made affidavit in behalf of said Marsh with a view to filing the same in said interference; and, further, that I am well acquainted with the handwriting of the said Cass, and that the letter hereto annexed is in his own handwriting, to the best of my knowledge and belief; and further deponent sayeth not.

EDWIN C. NICHOLS.

978 Sworn and subscribed to before me this 2d day of December, A. D. 1882.

[SEAL.] FRANK W. DUNNING,
Notary Public in and for Calhoun County, Michigan.

FRANKFORT, IND., *Sept. 8th*, 1880.

Messrs. Nichols, Shepard & Co., Battle Creek, Mich.

DEAR SIRS: Yesterday I went out with Mr. Marvin to see Mr. Slipher thresh clover seed with Mess. Rush & Huffet's machine. Slipher did not put in an appearance, but sent his best men.

The clover which they threshed was the large kind and poorly filled. The machine did perfect work. Slipher's boss thresher says it does as good work as the Victor huller, and better than the Birdsell huller.

On Friday Rush & Huffet will thresh Huffet's clover seed, at which time Mr. Marvin will visit them, and write an article relative to the clover attachment and have it published in a Frankfort paper.

I think that the attachment is a grand success. The only chance where I think it may not satisfy is in damp clover, in not hulling all of the seed; yet it may do as well in that regard as regular hullers.

Threshermen here are well posted in clover cleaning, and they have examined thoroughly the work done with the attachment, and they all say it does perfect work and more of it than can be done with the Victor of Birdsell hullers.

Yours truly, C. G. CASE.

Endorsed on cover: Michigan, Calhoun county circuit court. No. 136. Elon A. Marsh and Minard Lafever, plaintiffs in error, *vs.* Nichols, Shepard & Co. Filed October 4, 1887.

SUPREME COURT OF THE UNITED STATES.

ELON A. MARSH, and
MINARD LAFEVER,
Plaintiffs in Error,

vs.

NICHOLS, SHEPARD & CO. (a corporation),
Defendant in Error.

In Error to the Circuit Court for the County of Calhoun, Michigan.

REPLY BRIEF FOR PLAINTIFFS IN ERROR,

BY R. A. PARKER AND DON M. DICKINSON.

DETROIT:
John F. Eby & Co., Printers, 65 & 67 W. Congress St.
1891.

Supreme Court of the United States.

ELON A. MARSH, and MINARD LAFEVER, *Plaintiffs in Error,* vs. NICHOLS, SHEPARD & Co. (a corporation), *Defendant in Error.*	*In Error to the Circuit Court for the County of Calhoun, Michigan.*

REPLY BRIEF FOR PLAINTIFFS IN ERROR.

BY R. A. PARKER AND DON M. DICKINSON.

It is unnecessary to reply to the brief for defendant in error further than this:

I.

The plaintiffs in error had unqualified right, secured by the laws of the United States, to take their appeal from the final decree of the United States Circuit Court in the origi-

nal infringement case and *have it heard on its merits* involving every issue raised therein, in this court, and no state court or state power could take away that right in any manner whatever without their consent.

II.

The State courts of Michigan actually did attempt to take away that right in two ways:

First—By decreeing an *injunction* ordering the plaintiffs in error to abstain from "in anywise interfering" with the use by defendant in error of the invention.

The only possible result of this injunction was to debar the plaintiffs in error from prosecuting the litigation shown in evidence in that case as evidence of their interference with such use, and thus to prevent them from exercising the monopoly assumed to be granted by the patent; hence it was made to cover *any step* which tended towards the exercise of that monopoly, and would necessarily include the prosecution of an appeal and a final hearing, which on the issue framed might result in establishing that monopoly in this court.

Second—It is also ordered that plaintiffs in error sign a *written release* of all past and future causes of action within forty days from the date of the decree.

This necessarily covered the very ground of an accounting and an injunction against infringement prayed for in the elder case in the United States court, and which the appeal involved.

If this order had been obeyed, voluntarily or compulsory, it would have been a relinquishment of all pending causes

of action, and this court would, on motion, have dismissed the appeal *without a hearing upon its merits.*

Little vs. Powers, 134 U. S, 558, and cases cited.

And that such was evidently the purpose of obtaining such an order appears by the concluding portion of the opinion of the State Supreme Court.

III.

The only course open by which plaintiffs in error could preserve their right of a hearing on the merits brought up by the appeal to this court, and prevent a collision with the State authorities, was to take a writ of error to this court based upon the asserted grounds.

If they had prosecuted the appeal and had refused to obey the order requiring the signing of a release, they would have been liable to punishment for contempt by the State court, even if this court had refused to regard the injunction, and the decree of the State court, and had heard the appeal in due course upon its merits.

We respectfully submit that a State court has no jurisdiction to compel a settlement of an infringement case brought in the United States courts prior to the action of the State court, or to enjoin further proceedings in the nature of an appeal and hearing to this court under the circumstances of this case.

The opinion of the Supreme Court of the State conclusively shows that the conflict of jurisdiction was called to their attention, although they argued it under the name of a double vexation.

IV.

The gist of defendant's brief consists in the argument that the defense of license, had it been interposed in the original infringement case, would not have given the "affirmative" relief which the state courts could give, hence it appears that in the United States Court it chose to defend the case upon *other grounds*, which was quite possible it might not succeed in establishing.

Not being content with the condition of the defense in that case, it goes into the State courts on the plea of getting "affirmative relief," and attempts to make the State court interpose its authority to prevent the further prosecution of the original case by appeal to this court.

As a license is an agreement to *abstain* from enforcing a monopoly, the only "affirmative relief" the State courts could grant was to interpose a bar to the *further* prosecution of *any* action which tended to enforce the monopoly, hence the plea now brought forward that the State court was exercising its prerogative of giving "affirmative relief" is a concession that it was interposed to prevent the plaintiffs in error from taking and prosecuting their appeal to this court to a final hearing and a final result upon the merits of the original case, and upon the defense interposed in the original case by the defendant in error.

R. A. PARKER,
DON M. DICKINSON,
Counsel for Plaintiffs in Error.

SUPREME COURT U.S.
FILED.
JAN 25 1888
JAMES H. McKENNEY,
CLERK.

~~STATE OF MICHIGAN.~~

SUPREME COURT.
of the United States.

ELON A. MARSH and
MINARD LE FEVER,
Plaintiffs in Error,
vs.
NICHOLS, SHEPARD & COMPANY,
Defendants in Error.

No. 1098.

Error to the Circuit Court of the County of Calhoun. Cause remanded from the Supreme Court of the State of Michigan. Motion to advance hearing of cause.

For certain reasons outside of the litigation we cannot assent to this motion.

As the motion is based on the ground that 1098 should be heard with 337, because it is assumed that we will contend that it would be decided by it, it is sufficient for its defeat to consider the intimation that defendant in error will seek to combat it upon grounds which would render it independent of of 337.

They thus hold out to this court the position of assumed

pendence upon 337 to get it advanced, and in the same breath reserve the right to argue it independently upon a separate record, as a separate contest, upon separate question, not dependent whatever in 337. (See page 5 of their brief.)

If 337 does not decide it, and there remains other issues which cannot be decided by 337, then 1098 is simply advanced to suit the interests of parties, and this the court will never do, except where the questions in dispute will embarrass the operations of the government while they remain unsettled.

U. S. vs. Fossatt, 21 How., 445.
Sage vs. Central R. R. Co., 93 U. S., 412.

Nor, if the motion is based on the argument that 1098 has no merits, is that a sufficient ground for advancing the cause.

Armory vs. Armory, 91 U. S., 350.

But it is obvious that the two cannot be heard as one cause, as the records and questions are different.

R. A. PARKER,
Attorney for Plaintiff in Error.
DON M. DICKINSON,
Of Counsel.

Supreme Court of the United States

OCTOBER TERM, 1890.

No. 136.

ELON A. MARSH [illegible] MINARD LAFEVER, *Plaintiffs in Error.* vs. NICHOLS, SHEPARD & COMPANY, *Defendants in Error.*	*Error to Circuit Court for the County of Calhoun, State of Michigan.*

Brief for Plaintiffs in Error.

E. A. PARKER,
DON M. DICKINSON,
Of Counsel.

[illegible]

dependence upon 337 to get it advanced, and in the same breath reserve the right to argue it independently upon a separate record, as a separate contest, upon separate question, not dependent whatever in 337. (See page 5 of their brief.)

If 337 does not decide it, and there remains other issues which cannot be decided by 337, then 1098 is simply advanced to suit the interests of parties, and this the court will never do, except where the questions in dispute will embarrass the operations of the government while they remain unsettled.

U. S. vs. Fossatt, 21 How., 445.
Sage vs. Central R. R. Co., 93 U. S., 412.

Nor, if the motion is based on the argument that 1098 has no merits, is that a sufficient ground for advancing the cause.

Armory vs. Armory, 91 U. S., 350.

But it is obvious that the two cannot be heard as one cause, as the records and questions are different.

R. A. PARKER,
Attorney for Plaintiff in Error.

DON M. DICKINSON,
Of Counsel.

Supreme Court of the United States

OCTOBER TERM, 1890.

No. 136.

ELON A. MARSH and
MINARD LAFEVER,
Plaintiffs in Error,
vs.
NICHOLS, SHEPARD & COMPANY,
Defendants in Error.

Error to Circuit Court for the County of Calhoun, State of Michigan.

Brief for Plaintiffs in Error.

R. A. PARKER,
DON M. DICKINSON,
Of Counsel.

John F. Eby & Co., Detroit.

Supreme Court of the United States.

ELON A. MARSH AND MINARD LA FEVER, *Plaintiffs in Error.* vs. NICHOLS, SHEPARD & COMPANY (a corporation), *Defendant in Error.*	*In Error to the Circuit Court for the County of Calhoun, Michigan.*

BRIEF FOR PLAINTIFFS IN ERROR.

By R. A. Parker and Don M. Dickinson.

I.

STATEMENT.

This case is brought here on writ of error issued from this court to the Circuit Court for the County of Calhoun, in the State of Michigan.

The cause, after hearing in the Supreme Court of Michigan, was remanded to the said Circuit Court with instructions to carry out the decree of said Supreme Court; hence

the writ of error was issued to said Circuit Court for the purpose of bringing up for consideration the record and the decree of the said Supreme Court and the proceedings in conformity thereto in the Circuit Court.

Defendant in error filed its bill in the Circuit Court for the County of Calhoun, in chancery, against the said plaintiffs in error and one James Scott, on April 16, 1884, which bill in substance alleged:

That it was a corporation doing business in said county; that it was building a certain class of engines, called traction engines, upon which a reverse gear was desirable. That one of the defendants, Marsh, claimed to have made an invention for a reverse gear, for which he had applied for a patent, and that in the spring and early summer of 1880 he (Marsh) applied to the treasurer of said company, and exhibited to him this device; that Marsh was desirous of introducing his device, and that after some negotiations a contract was made whereby the defendant in error for a certain consideration was to have a future license to use the said device on any steam engine made by it, or under its direction, without any further claim by Marsh against it, and that the agreement was carried out by the defendant in error; that said Marsh having claimed to have obtained a patent thereon, had assigned one-half of the same to Minard La Fever, and that thereafter the two had assigned one-third interest to said James Scott, and that the said plaintiffs in error and the said Scott, claiming that the said agreement did not secure the said defendant in error the rights hereinbefore stated, had previously filed their bill in the Circuit Court of the United States for the Eastern District of Michigan, in Equity, praying for an injunction to restrain the defendant in error from manufacturing, using or selling said invention as secured by said letters patent; that the defendant in error had answered the said bill, and denied the validity of said patent; that considerable testimony was taken thereon showing the prior state of the art; that it appeared therein that the paper which the plaintiffs in error claimed as a patent was not valid as such, and was not signed

by the Secretary of the Interior at the time said suit was begun, but had been signed subsequent thereto, and that the said Circuit Court of the United States for the Eastern District of Michigan, in Equity, had entered a final decree in said cause dismissing said bill of complaint.

Defendant in error also charged that plaintiffs in error had caused to be introduced into the Congress of the United States bills granting them a patent, but that no such bills had become laws, "and that said defendants "(plaintiffs in error) have no valid patent, and have no "right to prevent any person whatsoever from manufactur- "ing said device. Nevertheless the said defendants (plain- "tiffs in error and said Scott) represent to the public that "they have secured letters patent upon said device, and "threaten to bring suits against this complainant (defend- "ant in error) and those persons purchasing from it."

That plaintiffs in error were affirming that defendant in error had no rights by virtue of the agreement set forth, and that until such patents shall have been granted the defendant in error is entitled to protection of said court to prevent and restrain the said plaintiffs in error from falsely and maliciously representing that said defendant in error is violating rights secured to plaintiffs in error by patent right, and from falsely and maliciously representing that defendant in error did not in good faith enter into the contract with said Marsh as set forth, even though said Marsh did secure a patent.

Whereupon defendant in error prayed as follows:

"1. That the defendants may true answer make to this "bill of complaint, but not on oath, answer under oath "being hereby expressly waived.

"2. That defendants may be ordered to refrain and "desist from asserting that complainant has not the full "and complete right to make, use, vend, or put into practice "or operation and use on any engine made, sold, used or "operated by it the said device in the same form or style "or substantially the same form or style as that exhibited "on the said engine made in 1880, at the time of its said "agreement with said Elon A. Marsh.

"3. That said defendants may be ordered to desist and "refrain from publishing or asserting that it has any right

"to the exclusion of this complainant in and to the said "device.

"4. That defendants may be ordered and decreed to spe- "cifically carry out the said original contract made between "complainant and Elon A. Marsh, by which, complainant "was to be permitted, if defendant Marsh should obtain "a patent on said device, to use, vend, and employ said "device on any or all engines made at defendants' shop with- "out molestation or interference on the part of said Marsh, "or any one who may have become interested with him in "said device, or the patent thereafter to be procured "therefor.

"5. That the writ of injunction of this court may be "issued to said Elon A. Marsh, Minard LeFever and James "Scott, directing them to abstain from interfering with "complainant's use of said device at the present time or in "the future if a patent should hereafter be granted to "them.

"6. That the usual writ of subpœna may issue to the "said defendants, Elon A. Marsh, Minard LaFever and James "Scott.

"7. That the complainant may have such other and dif- "ferent relief or further relief as may be in accordance with "its equitable rights." (Record p. 7.)

Thereupon the said plaintiffs in error filed their answer and supplemental answer to said bill admitting the invention and the application for a patent, the character of defendant in error and the business it was engaged in; that said Marsh desired to place one of said devices on an engine to demonstrate its superiority, denied each and every allegation that any contract for license was ever made, that defendant in error refused to make such contract at that time; that it subsequently notified plaintiffs in error that it would use the invention regardless of any rights plaintiffs in error might have by virtue of any patent; admitted that plaintiffs in error claimed a valid patent, and that defendant in error had no rights against it; admitted the litigation

in the United States Circuit Court for the Eastern District of Michigan, alleged that the defense therein interposed by defendant in error was the lack of novelty of the said claimed invention, and that defendant in error did not allege any defense on the ground of license, and asserted that they, plaintiffs in error, had appealed from a decree therein to the Supreme Court of the United States, and that such appeal was then pending.

That the claim of the defendant in error of a license was not set up and alleged for a long period after said cause had been brought in the Circuit Court of the United States.

The allegations of the supplemental answer as to the proceedings in the United States Circuit Court, and the appeal therefrom, were as follows:

"And these defendants, for further answer, say that the "cause heretofore mentioned in their answer having been "heard in the Circuit Court of the United States for the "Eastern District of Michigan, in equity, between these "defendants and James Scott as complainants, and the said "Nichols, Shepard & Co., in which a decree was entered "against these defendants, has been by the defendants "herein duly appealed to the Supreme Court of the United "States, and that the said court has, according to the rules "of practice in such case, allowed said appeal, and that "thereby all of the questions involved in the decision of "said cause, including the validity of the letters patent "on which the same was founded, are now pending the "decision of the Supreme Court of the United States; and "they further say that the defendant in the said cause, "Nichols, Shepard & Co., has also filed its claim of appeal "in said cause to the said Supreme Court of the United "States, in the Circuit Court of the United States for the "Eastern District of Michigan, in equity, which said appeal "has been allowed by the said Circuit Court" (Record, p. 27).

They also alleged the pendency of another suit brought

in equity in the said United States Court for the Eastern District of Michigan between the parties on the same and another patent brought by the plaintiffs in error.

Plaintiffs in error also demurred for want of equity.

Defendant Scott answered that he had no interest in the matter.

Defendant in error replied to said answer.

On the trial of said cause in said court, counsel for defendant in error introduced in evidence, among other things, a certified copy of the record of the proceedings in the Circuit Court of the United States for the Eastern District of Michigan, in equity, including the appeals taken by both parties to the Supreme Court of the United States and the allowance of said appeals, which said record is known as "Exhibit 18," and is printed in the Record in this cause, pages 285 to 308.

There was also introduced in evidence, among other things, certified copies of the letters patent upon which suit was brought, being letters patent 236052, dated December 28, 1880, and found upon page 245 of the Record; also letters patent 308567, dated November 25, 1884, found upon page 247 of Record; whereupon, after hearing, the said Circuit Court for the County of Calhoun entered its decree in favor of said defendant in error October 31, 1885, by which said court ordered and decreed that the said defendants therein (the plaintiffs in error with said Scott) do refrain and desist from asserting that the said defendant in error has not the full and complete right to make, use and vend said invention; that they do desist and refrain from publishing and asserting that they have any right contrary to the terms of said contract; that said contract be specifically carried out, and it was "Further ordered and decreed,

"therefore, that the writ of injunction of this court issue "to the said Elon A. Marsh, Minard LaFever and James "Scott, directing them to abstain, and perpetually enjoin- "ing them and each of them from in any wise interfering "with complainant's manufacture, sale and use of said "device, according to the terms of said contract."

Thereupon these plaintiffs in error appealed to the Supreme Court of the State of Michigan, in the manner and according to the rules and practice governing appeals in chancery in said court. The said cause afterwards came on to be heard in said Supreme Court, and the said court on the 10th day of June, 1886, rendered a final decree therein as follows, after reciting the title of the court and cause:

"This cause having been brought to this court by appeal from the Circuit for the County of Calhoun, in chancery, and having been argued by counsel and due deliberation had thereon, it is now ordered, adjudged and decreed by the court that the decree of the Circuit Court for the County of Calhoun, in chancery, be, and the same is hereby in all things affirmed; and it is further ordered, adjudged and decreed that the complainant do recover of and from the defendants and appellants its costs to be taxed." (Record, page 235.)

A motion having been made for a re-hearing of said cause, the court thereupon on the 21st day of July, 1886, entered a further order in said cause, which was in terms as follows:

"This cause having been heretofore brought to this court by appeal from the Circuit Court for the county of Calhoun, in chancery, and the decree of the Circuit Court for the county of Calhoun, in chancery, having been heretofore affirmed, and a motion having been made for a re-hearing, and this court having further considered the same, it is now here further ordered, adjudged and decreed that such re-hearing be denied, but that the decree be amended so that the defendants shall make, execute, and deliver to the said complainant, within forty days after the entry of this order in the Circuit Court for the county of Calhoun, a

release releasing the said complainant, Nichols, Shepard & Company, from all claim, right or demand on the part of them, the said Elon A. Marsh, Minard Lafever and James Scott, by reason of the manufacture, use or sale heretofore of the said invention relating to valve gear in the form and style as exhibited on the said engine, described in the decree in this cause, and also releasing the said Nichols, Shepard & Company from all claims, rights or demands on behalf of them, the said Elon A. Marsh, Minard LaFever and James Scott, arising from their making, using or vending the said device hereafter. It is further ordered, adjudged and decreed that this order be remitted to the Circuit Court for the County of Calhoun, in chancery, and be there made a decree of said cause in that court." (Record, p. 236).

Whereupon, after remittur to the said Circuit Court for the County of Calhoun, the following final decree in terms, in said cause, was ordered and entered in said Circuit Court.

This cause having been heretofore taken by appeal to the Supreme Court, and the decree heretofore rendered in this court having been affirmed and amended in the Supreme Court, and the cause having been remitted to this court, with an order directing the said amendment be entered by this court as a decree of this court, it is now here, in pursuance of the said order of the Supreme Court, ordered, adjudged and decreed that the said defendants make, execute and deliver to the complainant, within forty days after the entry of this order, a release releasing the said complainant, Nichols, Shepard & Co., from all claim, right or demand on the part of them, the said Elon A. Marsh, Minard LaFever and James Scott, by reason of the manufacture, use or sale heretofore of the said invention relating to valve gear in the form and style as exhibited on the said engine described in the decree in this cause, and also releasing the said Nichols, Shepard & Co. from all claims, rights or demands on behalf of them, the said Elon A. Marsh, Minard LaFever and James Scott, arising from their making, using or vending the said device hereafter.

FRANK H. HOOKER,
Circuit Judge.

Record, p. 239.

Whereupon writ of error was taken to this court based upon the reasons, that in said proceedings, record, and in the rendition of said decree, there was drawn in question an authority exercised by plaintiffs in error under the Constitution and laws of the United States, which authority was denied and more particularly specified as follows:

(1.) That it appears therein that the exclusive jurisdiction of the Supreme Court of the United States, on the appeal by these defendants, over the same question and the same parties was drawn in question and was denied.

(2.) That full faith and credit, at the request of these defendants, was not given to the proceedings, record and appeal appearing in the Circuit Court of the United States for the Eastern District of Michigan, concerning the same issue and between the same parties.

(3.) That the right and authority under the constitution and laws of the United States of the defendants to prosecute their said appeal from the said Circuit Court of the United States was drawn in question and denied.

(4.) That the right and authority under the constitution and laws of the United States authorizing the issue of letters patent to inventors, and especially the right and authority exercised by said defendants under letters patent No. 236052, issued in pursuance of said laws, was drawn in question and denied."

Before passing to the next branch of this brief, the case will be more clearly understood if the facts appearing in the record are stated in their chronological order, viz., to wit:

It appears that:

(1.) Marsh, one of the plaintiffs in error, had devised and applied for a patent upon a valve gear for steam engines, during the year 1880.

(2.) That after previous interviews in August, 1880, E. C. Nichols, an officer of the defendant in error, and said Marsh, agreed to the trial of one of these gears upon one of

their traction engines. The defendant in error contends that at this time an agreement was made that in consideration of such trial, etc., the defendant in error was to have a future license to make and sell these valve gears on all their engines. Plaintiffs in error denied this agreement. This agreement was not alleged until March, 1884.

(3.) December 28, 1880, said patent issued numbered 236058, but, through an oversight, was not then signed by the Secretary of the Interior.

(4.) February 11, 1881, defendant in error was notified of this issue (Exhibit 7, p. 249), and a demand made to sign a license and pay a royalty, if it desired to continue the use of the invention.

(5.) Some negotiations were had between the parties with an attempt to arrive at a settlement, or some arrangement for the future use of the device, but they failing.

June 9th, 1881, plaintiffs in error, with one Scott, filed their bill against defendant in error in the Circuit Court of the United States for the Eastern District of Michigan, in equity, alleging the issue of said patent, title in plaintiff's in error, tendering a copy of the specification and drawings of said patent, alleging that the complainants therein had granted a large number of licenses for the use of said invention, and that the public, with the single exception of defendant in error, had acquiesced in the rights of complaints, and charging infringement of said letters patent, "without the license or allowance and against the will of your orators and in violation of their rights."

That they, the plaintiffs in error, "had caused notice to be given to said defendant of such infringement and of their rights in the premises, and requested it to desist and refrain therefrom, but it had disregarded such notice and

refused to desist the said infringements," and still continued to manufacture and sell the infringing devices. Complainants then thereupon prayed for a "full, true, direct and perfect answer" to the premises and all the several matters therein stated; also for an accounting for a provisional and perpetual injunction.

(6.) September 22, 1881, the defendant in error filed its answer, which with the exception of the entitling, we quote in full. "The answer of the above named defendant, Nichols, Shephard & Co., to the complaint of the above named complainants, shows:

"*First*—This defendant denies that the said Elon A. Marsh was the original and first inventor of a new and useful improvement in steam engine valve gear, as described in the letters patent mentioned and described in said complaint.

"*Second*—This defendant knows nothing, except as it has been informed by said complaint or by hearsay, of the issuing of letters patent to said Elon A. Marsh and Minard LaFever, and therefore neither admits nor denies the allegation contained in paragraph second of said bill, but leaves complainants to such proof thereof as they may deem advisable.

"*Third*—This defendant knows nothing of the transfer of any rights by complainants Marsh and LaFever to complainant Scott.

"*Fourth*—Defendant denies that complainant, because of said letters patent, have acquired any exclusive right to manufacture, vend or claim anything whatsoever, and defendant knows nothing of any moneys that they may have expended in and about their so-called invention, or what, if any, licenses for the manufacture and sale thereof they may have sold or granted, but defendant denies that the public, with the single exception of this defendant, have acquiesced in their claim.

"*Fifth*—Defendant further says that upon investigation it became convinced and charges the fact to be that the so-called invention of complainants has been long known to

the general public, and that in the specific form as described in the complainants' bill, it was of no value as a mechanical device; that, owing to necessary imperfections in the material and manufacture of devices of this sort, the instability of the gearing and the consequent irregular vibrations of the valves was such as to render the devices of little or no value.

"This defendant consequently, believing that the device was public property, instructed one of its workmen to devise something to overcome this defect, and as assignee of his invention has procured to be patented a device for overcoming such defects, and is making use of the same, though not in large quantities.

"*Sixth*—And defendant further shows, upon information and belief, that in or about the year 1865 there was in public use in Bowling Green, Kentucky, on a switch engine employed on the Louisville & Nashville Railroad, a device similar in all respects to that described in the complainants' claim, and used for the same purpose; that this defendant has been unable to procure the names of the parties who examined and operated said engine containing said device, and prays that he may insert the same when he shall thereafter discover them.

"*Seventh*—That in the year 1858 one James Farrabee procured a patent in England for a cut-off valve gear, having an identical arrangement and embodying precisely the same principles as those contained in complainants' claim; that such patent was No. 2858 for the year 1858, and differs from the device of complainants only in this: that where complainants have two intermeshing cog wheels of equal diameter, the English device had cog wheels, one of which contained twice as many teeth as the other, but the mechanical results arrived at were the same.

"*Eighth*—That in the year 1853 a patent was granted to one Shaw, in England, numbered 210 of that year, for a device embodying the principle of complainants' claim.

"*Ninth*—That defendant is informed that certain persons, whose names it cannot now give, in Taunton, Massachusetts, manufactured and used precisely similar devices many years ago, and that defendant is causing extensive inquiries to be made in that vicinity, and asks that it may

be permitted to amend this answer, including the names and residences of such persons.

"Wherefore this defendant prays to be hence dismissed, with its costs and charges in this behalf sustained.

JOHN NICHOLS,
President.

EDWIN C. NICHOLS,
Secretary."

Record, p. 288.

(7.) Thereupon, after leave previously obtained on January 11, 1882, an amendment was made to the answer by setting up another anticipating patent.

(8.) January 23, 1882, a further amendment was made on leave, setting up two further patents alleged to anticipate.

(9.) February 24, 1882, said patent was signed by the Secretary of the Interior.

(10.) April 16, 1883, the bill of complaint heretofore referred to was dismissed by said court.

(11.) February 26, 1885, an appeal was claimed and allowed and perfected to the Supreme Court of the United States by the plaintiffs in error.

(12.) March 11, 1885, defendant in error also claimed an appeal, which was allowed.

(13.) April 16, 1884, defendant in error filed its bill in Calhoun county, as hereinbefore stated, alleging contract of license and praying for an injunction against the interference, etc., to which plaintiffs in error answered, June 22, 1885.

(14.) June 24, Exhibit 18 was introduced by defendant in error in evidence to support its theory of its case, as to unwarrantable interference, which exhibit consisted of the proceedings in the U. S. Circuit Court, including the appeal heretofore referred to.

(15.) The decree of the Circuit Court of Calhoun County was entered November 3, 1885. The case was thereupon appealed to the Supreme Court of the State of Michigan, and final decree rendered, with an order that the plaintiff in error, in addition to the issuing of the injunction, should make and execute a release, within forty days after the entry of the order in the Circuit Court for the County of Calhoun, releasing the defendant in error from all claims, rights or demands in the past or the future.

(16.) September 13, 1886, an order accordingly was entered in said Circuit Court for the County of Calhoun in chancery, in addition to the decree ordering the injunction, that the said plaintiffs in error execute such release within forty days from that date, as hereinbefore set forth, whereupon writ of error was taken to this court upon the errors alleged.

II.

The error assigned, which is one plain upon the face of the Record, is,

That the Circuit Court of the County of Calhoun and the Supreme Court of the State of Michigan had no jurisdiction in the premises.

That this question was raised in the State court and was decided adversely to the plaintiff in error, appears by the opinion of the Supreme Court of that State, which has been returned from the Record (p. 240), in which, after stating briefly the facts appearing, that court said, among other things not material to be considered:

"In addition to denying the right of the complainant,

defendants (plaintiffs in error) also rely on the fact that they, subsequently to the allowance of the patent, filed a bill against complainant in the Circuit Court of the United States for the Eastern District of Michigan, charging an infringement, and (that) complainant (defendant in error) set up in defense the invalidity of the patent and put the invention in issue, but did not set up license. This suit was defeated on the ground that the patent had never been issued and signed and sealed by the proper officers. An appeal was taken by the defendants and also by the complainant to the United States Supreme Court, where it is now pending. * * *

"The suit now before us not being brought to determine any question arising under the patent laws, but merely to enforce a contract to transfer an inventor's right, is not one in which the courts of the United States have particular jurisdiction. All parties are citizens of Michigan.

"There is nothing therefore to prevent the maintenance of this suit unless the two suits are so nearly identical that this creates a double vexation. Questions touching the legal validity of patented rights belong to the courts of the United States, and we do not propose to consider any such question." * * *

"We do not think that complainants are estopped by that litigation. * * * We think the case is one where relief should be given in equity; while defendants hold the patent no one will feel safe in buying an engine with their device attached at the risk of a law suit. Their open and notorious denial of complainant's rights has a tendency to prevent sales and discredit them. Without a written license they can never have the means of rebutting the charges. Defendants having shown a disposition to interfere with them, should be compelled to give them a written evidence of the right which they have bought and paid for. The court below having so held, the decree should be affirmed."

POINTS.

The struggle of this inventor to obtain the protection of his valuable invention under the patent laws of the United States, and to maintain the validity of his patent, after issue, has lasted more than half the life of a patent under the law. During all that time, the active hostility to the granting of the patent, on the ground that he was not the first inventor, and the contention against its validity after its issue on the same ground, have, in every branch and at every stage of the controversy, been represented by this complainant corporation, Nichols, Shepard & Co.

In three independent suits in the Circuit Court of the United States, as defendants; in one suit commenced by them as complainant in the Supreme Court of the District of Columbia; in the Hoag Interference case in the Patent Office, and in the appeal and cross appeal in this court—reported in 128 U. S., 605—Nichols, Shepard & Co. have persistently maintained, as their sole defense in cases where that corporation was defendant, and as their entire case on the merits, where it was complainant, the fundamental proposition that Marsh was entitled to no protection under the law, because he was not the first inventor of the device in question. In Congress too, as appears by the Record, this corporation contested the bill to make good the patent on the same grounds.

Necessarily, under such circumstances, benefits to the inventor, or returns from the invention, have waited upon the decision of this controversy.

In the nature of things, the litigation has been known wherever such an invention might be used, and the fact that the contest went to the right of the inventor to protection against any one, or to protect any one in its use, was necessarily notorious.

Making this contest for years, in cases where the existence of a license would have been a good defense and was a question actually involved, without a hint in the pleadings or proofs of such a claim, this complainant, on this record, claims the right to cross ahead of any decision on the merits, and to forestall that decision by entering a State court, there set up for the first time the claim of an oral license, and, though still denying the novelty of the invention and the validity of the patent, in that forum, either to put a stop to the further prosecution of the patent suits here, as well as below, by injunction, or, by a decree for releases to eliminate the force of any decree in the Federal courts, on appeal or otherwise.

Independent of the question as to the jurisdiction of the State court to take possession of the whole or any part of a controversy, clearly involved in a suit in the Federal court, pending its decision there, we submit this proposition:

That the question of whether Marsh was the first inventor of the device and so entitled to the benefit of the patent laws, being exclusively for the Federal Courts, even before the initiation of a suit in one of those tribunals, involving that question, the State court would have no jurisdiction, either to restrain such a suit by injunction, or to render the decree of the Federal court, sustaining the validity of the patent, futile, by its decree.

We shall see that the injunction granted by the State court in effect restrained the bringing of any suit against

the complainant corporation, alleging infringement. But the decree also provides that within forty days the inventor and his partners shall release the complainant from all claim, right or demand for infringement before and after the date of the decree; so that in case of a suit for infringement, or a decree in such suit by the Federal court at *nisi prius*, or by this court on appeal, such a release might be a bar in one case or a satisfaction in the other.

The case is not within *Hartell vs. Tilgham*, 99 U. S., 547. There, there was no question made as to the validity of the patent. Both parties based their claims upon it, and the majority of this court held, that the relief sought was founded upon the contract for a license and not upon the patent laws. It is clear, both from the judgment of the court and from the strong dissent of Mr. Justice Bradley, concurred in by the Chief Justice and Mr. Justice Swayne, that if there had been any contention as to the validity of the patent in that case, this court would have held it to be within the Federal jurisdiction together with every question in controversy, including those arising upon the validity and performance of the contract.

The bill of complaint in the State court was filed April 16, 1884. This was more than two years after the formal defect in the patent, by reason of the omission of the signature of the Secretary of the Interior, had been completely remedied by his signature in February, 1882, when, according to the decision of this court on the appeal and cross-appeal (128 U. S., 605), the inventor's patent became valid. Yet in this bill the complainant sets up as a part of its case for relief the controversy on the merits on the question of infringement theretofore pending in the Circuit Court of

the United States for the Eastern District of Michigan, and avers that said defendants "have no valid patent, and no right to prevent any person whatsoever from manufacturing such device." It urges, as a ground for relief, that the inventor and his partners represent that they have secured letters patent upon the device, and that they threaten to bring suit against the complainant and those persons purchasing from it, but sets up a claim of parol license, and asks to be protected against the inventor's interfering with the complainant "in any way whatever" under the patent which may be issued by virtue of a bill for the relief of the defendants therein, then pending in Congress.

The actual controversy upon the question of whether Marsh is the first inventor is also shown by the answer and the supplemental answer in the State court, wherein the proceedings in the Circuit Court of the United States, in the Supreme Court of the District of Columbia, in the Interference case in the Patent Office, and the appeal and cross-appeal to this court, are fully set out.

Now if it be true that a controversy involving the validity of a patent is exclusively within the jurisdiction of the United States courts, it is none the less true that that jurisdiction is exclusive if the question of whether there was a license from the patentee is also involved.

Littlefield vs. Perry, 21 Wall., 205, 230.

If a patent is involved, it carries with it the whole case.

The State of the Case at the Time of the Decree in the State Supreme Court.

The pleadings in this case showed on the part of the

complainant that it denied the validity of the patent. Its bill expressly negatives any assent to that validity. It shows a new and most extraordinary claim for a license, and itself shows the pendency of the case in the United States Circuit Court, involving the questions whether Marsh was the first inventor of the device, and whether his patent already obtained and then undoubtedly valid *prima facie*, was void for want of novelty, both questions depending upon the constitution and laws of the United States.

On the part of the defendants the answer and supplemental answer show the pendency of the case in the Federal court, the appeal and cross-appeal to this court, the filing of a new bill in the Federal court asserting the validity of the patent after the new signature of the Secretary of the Interior, the interference case in the Patent Office, and the bill of Nichols, Shepard & Co. in the Supreme Court of the District of Columbia to set aside the patent involved as invalid.

The only novelty in the new controversy, appearing by the bill in the State court, is the allegation of an oral license from the inventor to Nichols, Shepard & Co., alleged to have been granted long before any of the suits were commenced, in August, 1880, before even the formally defective patent was issued.

Clearly the whole controversy was in possession of the Federal courts. The defense that there was a license was one to be made under the bills for infringement, and to be concluded by the decision in those cases by the lower court or by this court on appeal.

As stated in the case of *Mayor vs. Cooper*, 6 Wall., 247, 252, "It is not an objection that questions are involved "which are not of a Federal character. If one of the latter

"exist—if there be a single such ingredient in the mass—it "is sufficient."

As we understand the case of *Osborn vs. Bank of the United States*, 9 Wheat., 738, it is established that if any part of a case rest on the Constitution and laws of the United States, the whole will be within the judicial power conferred by the Constitution.

"The true administration of justice requires that a case "shall not be examined by parcels, or one part considered "to the exclusion of the rest" (2 Hare's Am. Const. Law, 997, and cases).

Conceding, for the purpose of argument, that the State court had concurrent jurisdiction, because of the question as to the license, yet the United States Circuit Court had first obtained jurisdiction of the parties and of the subject matter, including that question as a part of it.

"It is a doctrine of law too long established to require a "citation of authorities, that where a court has jurisdiction "it has a right to decide every question which occurs in the "case; and that where the jurisdiction of a court and the "right of a plaintiff to prosecute his suit in it have ever "attached, that right cannot be arrested or taken away by "proceedings in another court. These rules have their "foundation not merely in amity but in necessity." (*Peck vs. Jenness*, 7 How., pp. 612, 624.)

Riggs vs. Johnson County, 6 Wall., pp. 166, 196.
Memphis vs. Dean, 8 Wall., 264.

It is familiar doctrine that jurisdiction cannot be divested in this way and a party forced into another tribunal.

Wallace vs. McConnell, 13 Pet., 136, 151.
Smith vs. McIver, 9 Wheat., 532.

Hogan vs. Lucas, 10 Pet., 400.
Taylor vs. Carryl, 20 How., 583.
Freeman vs. Howe, 24 How., 450.
Ableman vs. Booth, 21 How., 506.
1 Kent Com., 405.
3 Story Com., 521, 621.
French vs. Hay, 22 Wall., 250.

In *Memphis vs. Dean*, *supra*, it was held that the jurisdiction of a co-ordinate court could not be divested by instituting a new suit in another jurisdiction and adding a new question and a new party.

But in this case the question of license was directly and expressly involved by the pleadings in the Federal court.

Paragraph 5 of the bill in the United States Circuit Court, which was here on appeal, avers that the use by Nichols, Shepard & Co. of the patented device is "without license "or allowance and against the will of your orators."

This was not overlooked by that corporation, as in its plea to the second bill filed before the commencement of this suit, it sets up in paragraph 5 this averment just quoted from the original bill (Record, p. 232).

The Injunction.

An examination of the bill of complaint shows that its main purpose is to restrain the inventor from asserting the validity of his patent in the Federal jurisdiction, either by prosecuting new or old suits, or by appealing from the decree in the first suit in the Federal Circuit Court. The stating part of the bill shows as the "interference" sought to be restrained the pending suit afterwards appealed, and alleges the "threat" of the inventor to bring another suit averring the validity of his patent. In its proof, the rec-

ords and proceedings of the Federal court were offered by the complainant as evidence of the interference to be enjoined.

It was not, and is not, pretended that if there was a license it would not be a complete bar to a suit for infringement in the Federal jurisdiction, so that it was no ground for the interference of the State court, that the license should estop the inventor from asserting an infringement in that jurisdiction.

Although the Supreme Court of the State in its opinion says that it does not assume to pass upon any question arising under the patent laws of the United States, yet in effect, on the pleadings in the case and on the proof, the only interference with the complainant passed upon and enjoined were the then present and threatened suits for infringement of patent rights.

In the opinion itself it is assumed that there was no valid patent at the time of the filing of the bill or the making of the decree.

An injunction to restrain interference is an injunction to restrain the bringing of suits.

> High on Injunctions, § 866.
> Mabley vs. Judge of Superior Court, 41 Mich., 31, 35.
> Hare's Am. Const. Law, 1221 and cases in note.

An injunction restraining a party from proceeding with a suit is within the rule of law which prohibits one court from enjoining another.

> Dial vs. Reynolds, 96 U. S., 340.

No court has been more ready to apply this rule and assert the independence of the State court and of parties

proceeding in that jurisdiction, than the Supreme Court of Michigan.

See Mabley vs. Judge, *supra.*

At the time of the decree of the Supreme Court of Michigan, July 21, 1886, the fact of the pending undecided appeal to this court from the United States Circuit Court in Michigan was before it. That appeal was decided December 10, 1888.

Thus the Supreme Court of Michigan assumed to forestall the decree of this court on the merits, as well as upon the technical objection to the patent for want of signature, by decreeing, not only that the inventor should not interfere "in any wise" with the complainant's use of the patent, but also that the inventor should execute a formal release within forty days, which would cover anything of benefit given him by a decree on the merits by this court, and anything of benefit that should be given him by any decree of the Federal courts in any other suit for infringement brought by him.

Under this decree this inventor is now in contempt, if the Supreme Court of Michigan shall be held by this court to have had jurisdiction in this cause, and he is forever barred from contesting the question of the validity of the patent against the only person who has persistently, from its issue, maintained that it gave him no protection under the Constitution and laws of the United States, and has thus, for all these years, destroyed the value of his discovery.

R. A. PARKER.
DON M. DICKINSON,
Of Counsel for Plaintiffs in Error.

Supreme Court of the United States.

October Term, 1890.

No. 136.

ELON A. MARSH AND MINARD LAFEVER, PLAINTIFFS IN ERROR.

vs.

NICHOLS, SHEPARD & CO.

In Error to the Circuit Court of Calhoun County, State of Michigan.

BRIEF FOR DEFENDANT IN ERROR.

C. P. BURTON,
Solicitor for Defendant in Error.

proceeding in that jurisdiction, than the Supreme Court of Michigan.

See Mabley vs. Judge, *supra.*

At the time of the decree of the Supreme Court of Michigan, July 21, 1886, the fact of the pending undecided appeal to this court from the United States Circuit Court in Michigan was before it. That appeal was decided December 10, 1888.

Thus the Supreme Court of Michigan assumed to forestall the decree of this court on the merits, as well as upon the technical objection to the patent for want of signature, by decreeing, not only that the inventor should not interfere "in any wise" with the complainant's use of the patent, but also that the inventor should execute a formal release within forty days, which would cover anything of benefit given him by a decree on the merits by this court, and anything of benefit that should be given him by any decree of the Federal courts in any other suit for infringement brought by him.

Under this decree this inventor is now in contempt, if the Supreme Court of Michigan shall be held by this court to have had jurisdiction in this cause, and he is forever barred from contesting the question of the validity of the patent against the only person who has persistently, from its issue, maintained that it gave him no protection under the Constitution and laws of the United States, and has thus, for all these years, destroyed the value of his discovery.

R. A. PARKER.
DON M. DICKINSON,
Of Counsel for Plaintiffs in Error.

JAN 2 1891
JAMES H. McKENNEY
CLERK

Supreme Court of the United States.

October Term, 1890.

No. 136.

ELON A. MARSH AND MINARD LAFEVER,
PLAINTIFFS IN ERROR.

vs,

NICHOLS, SHEPARD & CO,

In Error to the Circuit Court of Calhoun County, State of Michigan.

BRIEF FOR DEFENDANT IN ERROR.

C. F. BURTON,
Solicitor for Defendant in Error.

Supreme Court of the United States.

ELON A. MARSH and
MINARD LAFEVER,
vs.
NICHOLS, SHEPARD & CO.

BRIEF FOR DEFENDANT IN ERROR.

The parties are all citizens of Michigan and the jurisdiction of the United States court over them is limited by their residence, to those cases in which the United States Court has exclusive jurisdiction over the subject matters of litigation.

The subject of litigation in this cause was a contract made between the parties, under which Nichols, Shepard & Company, claimed the right to use certain inventions. These inventions formed the subject of two patents, or what for convenience I will call patents.

The first of these so called patents was invalid for defects on the face of the papers under which it was claimed the patent was granted.

Marsh vs. Nichols, 120 U. S., 595.

The second patent was a valid patent issued in 1884.

The contract for a license was made while the application for the first patent was pending and before it had been allowed, and this contract formed the subject of the suit that was tried in the State Court, and which it is here sought to review.

In order to review the decree of the State Court there must have been some interference on the part of the State Court, with rights which are assured to the appealing party by the Constitution or Statutes of the United States; the causes for which such a review may be had are not numerous and are all defined in Section 709 of the United States Revised Statutes.

The assignments of error upon which the writ is founded are,

1. That the exclusive jurisdiction of the Supreme Court of the United States, on an appeal by the plaintiffs in error, over the same question and the same parties, was drawn in question and denied.

2. That full faith and credit, at the request of the plaintiffs in error, was not given to the proceedings, record and appeal, appearing in the Circuit Court of the United States, concerning the same issues between the same parties.

3. That the right and authority under the constitution and laws of the United States, of the plaintiff in error to prosecute their appeal from the Circuit Court of the United States, was drawn in question and denied.

4. That the right and authority under the constitution and laws of the United States, authorizing the issue of letters patent to inventors, and especially the right and authority exercised by plaintiffs in error, under letters patent No. 236,052 issued in pur-

suance of said laws was drawn in question and denied.

It is difficult to understand how these assignments of error are brought within the scope of the statute permitting writs of error in the State Courts; but I apprehend that it will not be necessary to discuss that question, inasmuch as no one of the assignments of error is borne out by the record, that is, a careful reading of the record will show that the State Court was neither called upon to do, and in fact, did not do any act of which complaint could be made.

The litigation between the parties as disclosed by the record, has been extensive and a history of it will substantiate this statement, and substantiate the fact that the State Court in its action, was clearly within the limits of its jurisdiction, and that it interfered in no way with any rights which the plaintiffs in error had under any law of the United States or any authority exercised under the United States.

In the summer of 1880 Mr. Marsh invented a device for reversing the motion of steam engines, and made an application for a patent for that invention. During the time the application was pending in the patent office, he entered into an agreement with Mr. Nichols, who represented the defendants In error, the terms of which agreement were known only to himself and Mr. Nichols, but as was afterwards determined by the State Court, the agreement provided that Mr Nichols was to do certain things in exploiting the invention, in return for which Mr. Marsh was to allow a shop right of the use of it.

Mr. Nichols performed his part of the agreement, but Mr. Marsh before the patent issued assigned an interest in it to Mr. LaFever, and after it was suppos-

ed to have been issued, the two assigned another interest to Mr. Scott.

A written contract of license was not made. Nichols, Shephard & Company began to use the invention, and Marsh, LaFever and Scott brought suit in the Circuit Court of the United States for the eastern district of Michigan against Nichols, Shepard & Company, for an infringement of their rights claimed to be secured to them under their supposed patent.

During the progress of this suit, it was learned that the supposed patent had never been signed by the Secretary of the Interior, and when this fact was brought to the attention of the court on final hearing the bill was dismissed.

The decree of the Circuit Court in the first case was made on March 6, 1883.

SECOND SUIT.

On the 23d of April, 1883, Marsh, LaFever and Scott, filed a second bill of complaint in the same court, and to this bill the defendants pleaded the decision of the former case in bar. On April 8th, 1884, the complainants applied for an order to dismiss this last bill of complaint, and it was dismissed accordingly.

At this time complainants were threatening customers of the defendants with suits for infringement, and the defendants in error commenced

THE THIRD SUIT.

This third suit was commenced in the circuit court for the county of Calhoun, and is the proceeding in which the errors complained of are alleged to

have been made; it was a suit in equity for the specific performance of the contract made in the summer of 1880, and the prayer of the bill was: "That the plaintiffs in error be ordered to refrain and desist from asserting that the defendants in error have not the full and complete right to make, use, vend, or put into practice or operation and use on any engine, made, sold, used or operated by it, the said device in the same form or style, or substantially the same form or style as that exhibited on the engine made in 1880, at the time of the agreement with said Elon A. Marsh. That the plaintiffs in error be ordered to desist and refrain from publishing or asserting that they have any right to the exclusion of complainant in said device. That they be ordered and decreed to specifically carry out the original contract, by which complainant was to be permitted, if defendant Marsh should obtain a patent, to use, vend and employ said device on any or all engines made at defendant's shop without molestation or interference on the part of said Marsh, or any one who may have become interested with him in said device or in the patent to be procured therefor, and that an injunction issue to the plaintiffs in error, directing them to abstain from interfering with complainants' use of said device at the present time or in the future, if a patent should be granted to them."

The bill set up the proceedings had in the first case, and the decree that had been rendered, and asserted that because of that decree the plaintiffs in error could not claim under a present patent, but that proceedings were pending under which the invention might ripen into a patent.

On November 25, 1884, a second patent was issued relating to the same invention.

On February 26, 1885, the plaintiffs in error claimed an appeal from the decree in the first case.

FOURTH CASE.

On March 21, 1885, they filed a bill in the fourth case in the circuit court of the United States for the eastern district of Michigan; this was a bill counting on the patents of 1880 and 1884, alleging infringement of both of them.

On the 22d of June, 1885, the plaintiffs in error filed a second answer in the third case, and this answer for the first time made reference to the proceedings that had been had in the United States court in a way to claim that there was any possibility of conflict between the two courts.

The references spoken of are found on page 27 of the record, and consist in the statements:

1. That the decree entered in the first case had been appealed from, and thereby all the questions involved in the decision of that cause, including the validity of the letters patent, were pending the decision of the supreme court.

2. That since the filing of their answer in the third suit, they had commenced the fourth suit charging infringements of the patent of 1880 and 1884, and asking for an injunction to restrain the defendants in error from infringing either of said patents, and thereby affording to defendants in error, an opportunity to try all questions and matters, which are a legitimate defense to said charge of infringement,

and that all the matters counted on in the third suit are fully available as matters of defense in the fourth suit.

On the same day, before the opening of the hearing, the counsel for the plaintiffs in error objected orally to the jurisdiction of the state court on the ground that the bill and answer raised a question of the validity of letters patent.

This statement of the proceedings had in the various suits shows at once that the subject matter of the suits in the United States courts differed materially, from the subject matter of the suit in the state court.

The state was never called upon to discuss, and never did discuss even in a collateral way, the validity of either of the letters patent; they were left at the end of the litigation precisely where they were when the litigation commenced, consequently the right and authority which the plaintiffs in error had under the letters patent, was not questioned or denied; the contract which the plaintiffs in error had made with reference to the invention was established and enforced; but this was a matter entirely within the jurisdiction of the state court.

And between these parties exclusively within the jurisdiction of the state courts.

Hartell vs. Tilghman, 99 U. S., 547.
Albright vs. Teas, 106 U. S., 613.

There was no claim made in the court below that prosecution of the third case was in any wise intended to prevent the appeal, or that it would prevent the parties from prosecuting their appeal; certainly no

action of that kind was asked for, and none was taken by the state court.

At the time of the hearing in the state court the appeal was already in this court, and the only claim made was, that the matters under consideration in the state court, were pending decision in this court.

In reality this claim was not true, for the matters under consideration in the two courts were entirely distinct, so much so, that neither of the courts had any jurisdiction whatever over the matter which formed the subject of the suit in the other court, and there was no decree in the United States Court under which the plaintiffs in error could claim any right or immunity with which the state court threatened to interfere.

So that, as a matter of fact, there was no basis for the alleged errors upon which the plaintiffs in error rely.

In the cases which have come before this court, in which this question has been considered, there has been a distinct decree granting affirmative relief, under which a party sued in a state court had a right to claim immunity from the decision rendered against him in the state court.

Crescent City L. & C. Co. vs. Butchers' Union Co., 120 U. S., 141.

Dupasseur vs. Rocherau, 21 Wal., 130.

But in the present instance, as the decree stood at the time of the hearing in the state court, and as it stands to-day, the plaintiffs had been granted no relief that at all related to the subject matter of the patent or the invention, much less had they been granted any relief which related to the contract.

It is undoubtedly true that the defendant in error might have employed its license as a defense in any one of the suits brought by the plaintiffs in error in the United States Court, but that would not have given it the affirmative relief to which it was entitled, because the contract covered a subject matter broader in its scope than either the first or the second patent, and perhaps broader than both together; it carved out from the invention which Mr. Marsh had made, a shop-right, and created a license on the part of the defendants in error to use and enjoy this license, and over this license the state courts had jurisdiction and the United States court had none, even had it been brought into that court by way of cross-bill

Hartell vs. Tilghman, 99 U. S., 547.
Albright vs. Teas, 106 U. S., 613.
Wilson vs. Sandford, 10 How., 99.
Brown vs. Shannon, 20 How., 35.
Dale Tile Manufacturing Co. vs. Hyatt, 125 U. S., 46.

It appears thus, that not only was there no conflict of jurisdiction, but that the subjects of the various litigations were so diverse, that it would have been impossible to have brought about a conflict without overstepping the jurisdictional limits of the court.

The United States Court could not discuss and enforce the contract; it neither did discuss nor attempt to enfore it.

The state court could not discuss and determine the validity of the patent, it neither did, discuss nor attempt to determine the validity of them.

The right of appeal in the first case had been claimed, and the appeal perfected before the hearing was had in the state court, and the state court was

entirely silent with regard to that right of appeal, neither denying it nor attempting to hamper the parties in any way. The decree in the state court and the opinion of the Supreme Court is entirely silent with regard to the right of appeal, and the appeal was prosecuted to a hearing in this court, and the decree of the court below sustained.

The decree of the state court at circuit ordered that the contract be carried out and performed; that the plaintiffs in error be ordered to desist from, publishing or asserting contrary to the terms of the contract, that they have rights to the exclusion of complainants; that the plaintiffs in error desist from interfering with complainants' manufacture, use and sale of the device.

This decree was affirmed in the Supreme Court of the state, and was there amended so as to order the plaintiffs in error to execute and deliver to the defendant in error a release of past demands, and of future claims because of their use of this device.

We submit, that a careful examination of the records shows that the state court did not overstep the limits of its jurisdiction, treated only of matters which were appropriate to it, and denied no right which the plaintiffs in error had under the constitution or laws of the United States, and coming to them either through patents or proceedings in court, and

We submit that the writ of error should be dismissed.

C. F. BURTON,

Solicitor for Defendant in Error.

entirely silent with regard to that right of appeal, neither denying it nor attempting to hamper the parties in any way. The decree in the state court and the opinion of the Supreme Court is entirely silent with regard to the right of appeal, and the appeal was prosecuted to a hearing in this court, and the decree of the court below sustained.

The decree of the state court at circuit ordered that the contract be carried out and performed; that the plaintiffs in error be ordered to desist from publishing or asserting contrary to the terms of the contract, that they have rights to the exclusion of complainants; that the plaintiffs in error desist from interfering with complainants' manufacture, use and sale of the device.

This decree was affirmed in the Supreme Court of the state, and was there amended so as to order the plaintiffs in error to execute and deliver to the defendant in error a release of past demands, and of future claims because of their use of this device.

We submit, that a careful examination of the records shows that the state court did not overstep the limits of its jurisdiction, treated only of matters which were appropriate to it, and denied no right which the plaintiffs in error had under the constitution or laws of the United States, and coming to them either through patents or proceedings in court, and

We submit that the writ of error should be dismissed.

C. F. Burton,

Solicitor for Defendant in Error.

IN THE SUPREME COURT

OF THE UNITED STATES.

OCTOBER TERM, 1887.

ELON A. MARSH AND
MINARD LE FEVER,
Appellants,
vs.
NICHOLS, SHEPARD & CO.,
Appellee.

No. 1098.

Motion to Advance Hearing of Cause.

CHARLES F. BURTON,
Attorney for Appellee.

DETROIT:
JOHN F. EBY & CO., PRINTERS, 65 AND 67 WEST CONGRESS ST.
1887.

IN THE

Supreme Court of the United States

ELON A. MARSH and
MINARD LE FEVER,
Plaintiffs in Error,
vs.
NICHOLS, SHEPARD & COMPANY,
Defendants in Error.

No. 1,098.

Error to the Circuit Court for the County of Calhoun.

And now comes the said defendant in error and moves the court now here that this cause No. 1,098 be advanced, and heard at the same time with causes Nos. 337 and 364, appeal and cross-appeal cases respectively of Elon A. Marsh and Minard Le Fever, and James Scott, against Nichols, Shepard & Company, and Nichols, Shepard & Company against Elon A. Marsh and Minard Le Fever and James Scott, and bearing respectively those numbers on the docket of the October term of 1887; and as reasons for this motion the defendant in error says:

First—That case No. 337, which is an appeal taken by Elon A. Marsh and Minard Le Fever and James Scott from a decree rendered against them and in favor of Nichols, Shepard & Company, presents for the consideration of this court:

1. The question whether certain papers counted upon as letters patent were in fact letters patent, duly issued and in all respects valid, to be used as the foundation of a suit for an

infringement because of the use of the mechanism described in said papers; and

2. If it shall be determined that the said paper counted on was valid, the said cause will involve the further consideration of the validity of the patent, under the evidence introduced upon the subject of want of novelty in the invention. Such further consideration, if it become necessary, will be had either in this court, or in the court below, on a remand made for that purpose.

Second—And case No. 364, which is an appeal taken by Nichols, Shepard & Company from an order made in the same case, involves the consideration of an order suppressing evidence taken by deposition on behalf of the appellee, and by the order appealed from stricken from the record of the cause and from the files of the Circuit Court of the United States for the Eastern District of Michigan.

Third—And the question to be determined in case No. 1,098, which is a writ of error sued out by Elon A. Marsh and Minard Le Fever, plaintiffs in error, against Nichols, Shepard & Company, defendants in error, will be whether or not the Circuit Court for the county of Calhoun and the Supreme Court of the State of Michigan, on appeal therefrom, had jurisdiction of the subject matter which was considered of by the said Circuit and Supreme Courts, and whether the said plaintiffs in error had good warrant for their assignments of error in said cause, which were as follows:

1. That it appears therein (meaning in the record of the cause heard by the Circuit Court for the county of Calhoun and the Supreme Court of the State of Michigan) that the exclusive jurisdiction of the Supreme Court of the United States, on the appeal by these defendants (meaning the appeal by said Elon A. Marsh, Minard Le Fever and James Scott, in case No. 337 mentioned above), upon the same question and between the same parties, was drawn in question and denied.

2. That full faith and credit at the request of these defendants was not given to the proceedings, record and appeal appearing in the Circuit Court of the United States for the

Eastern District of Michigan, concerning the same issues and between the same parties.

3. That the right and authority under the constitution and laws of the United States of the said defendants to prosecute their said appeal from the said Circuit Court of the United States, was drawn in question and denied.

4. That the right and authority under the constitution and laws of the United States, authorizing the issue of letters patent to inventors, and especially the right and authority exercised by said defendant, under letters patent No. 236,052 (being the same alleged letters patent of which the validity is to be determined in case No. 337) issued in pursuance of said laws, was drawn in question and denied.

And it appears by the record in this cause that the appealed case of Elon A. Marsh and Minard Le Fever and James Scott against Nichols, Shepard & Company, now pending in this court, and No. 337, of the October docket, was the only appealed case referred to in the record, and the only appealed case which could be referred to in the said assignments of error, and because it is alleged by the plaintiff in error in this cause as the main grounds for asking this court to investigate the questions considered of, by the Circuit Court for the county of Calhoun, and determine whether that court wrongfully took jurisdiction of matters properly within the sole jurisdiction of the Federal Court, this defendant in error asks the court to advance this cause to be heard at the same time with or immediately after the said cause No. 337, at which time this defendant in error will ask the dismissal of this cause, on proper motion to that end to be made.

NICHOLS, SHEPARD & COMPANY,
BY CHARLES F. BURTON,
Its Attorney.

An application of this kind is addressed to the discretion of the court, and a statement of the questions in issue in the several appeals will be sufficient to enable the court to determine whether it is desirable that the application should be granted or not.

Case No. 337 was a suit in equity for an injunction, and was founded upon an alleged patent. When the alleged patent was introduced in evidence it was found to be without the signature of the Secretary of the Interior.

Testimony was taken in the cause as to the novelty of the invention, and some of the most important of this class of defendant's testimony was stricken from the record, by an order which was appealed from and forms the subject of the case No. 364.

At the hearing below of No. 337, the question discussed by counsel and decided by the court was the validity of the paper counted upon as a patent, at the time the suit was com-commenced.

The court decided it invalid at the time the suit was commenced, and of course the questions to be determined are whether the court was right in these two decisions, one of which evicerated defendant's testimony on the question of want of novelty, and the other of which held the plaintiff's title to have been invalid at the time the suit was commenced.

The case which was tried in the State court was brought by Nichols, Shepard & Company, for the specific performance of an agreement entered into between Nichols, Shepard & Company and Elon A. Marsh, at a time when he had an application for a patent pending, by which they, said Nichols, Shepard & Company, were to be allowed to use his invention. This invention was broader than the invention described in the alleged letters patent No. 236,052, and included also mechanism described in another patent, which was subsequently granted to Marsh, and numbered 244,807.

The State court found as a fact that the agreement to license existed, and ordered the defendants not only to refrain from taking any action in contravention of their agreement, but to execute a proper paper evidence of the agreement.

It is this order at which the defendants felt aggrieved, and which they seek to review under the assignments of error set out at length in the motion.

Considering the case No. 1,098 from the point of view of the defendants in error, I do not think that the questions involved in it are the same as the questions involved in the case No. 337; but considering it from the point of view which the plaintiffs in error take, the cases are so involved that the decision of the first case would probably decide that of the second, and would almost certainly decide that of the second if the decision of the court below in case No. 337 is sustained; and it would seem that for the purposes of this motion we may consider this cause from the appellant's point of view, even though we see fit to combat that position when the cause comes on for argument.

CHARLES F. BURTON,
Attorney for Defendants in Error.

To R. A. Parker, Esq., Detroit, Michigan, Attorney for Plaintiffs in error, Elon A. Marsh and Minard Le Fever:

SIR—Please take notice that on Monday, the ~~23d~~ 30th day of January, 1888, at the Supreme Court room at Washington, D. C., at the opening of court on that day, or as soon thereafter as the same may be done, I shall submit to the Supreme Court of the United States, the foregoing motion, together with the accompanying brief and argument.

Dated, December 19th, 1887.

CHARLES F. BURTON,
Attorney for Nichols, Shepard & Company.

STATE OF MICHIGAN, County of Wayne. } ss.

Charles F. Burton, being duly sworn, deposes and says that on the 26th day of December, 1887, he served the within motion, notice and brief upon R. A. Parker, Esq., attorney for Elon A. Marsh and Minard Le Fever, by delivering the same to him personally at Detroit.

CHARLES F. BURTON.

Subscribed and sworn to before me this 27 day of December, 1887.

(Copy)

[Notarial Seal.]

Charles H. Fish

Notary Public, Wayne County, Michigan.

H